ESTUDIO TÉCNICO ACTUALIZADO PARA LA RESTAURACIÓN DEL ANTIGUO PALACIO MUNICIPAL (CASA DEL CORREGIDOR) MUNICIPIO DE SOGAMOSO.

PRESENTADO A:

SECRETARIA DE CULTURA
ALCALDIA DEL MUNICIPIO DE SOGAMOSO

COMPONENTE:

TECNICO ESTRUCTURAL DE REFORZAMIENTO DE LA EDIFICACION DE LA ZONA DELATANTERA DE LA CASA DEL CORREGIDOR

SOGAMOSO
MARZO 2022.

DIRECCIÓN: Carrera 9 No. 22 -55 Sogamoso, Boyacá
CORREO ELECTRONICO: consorciocorregidor08@gmail.com
TELEFONO: 315 738 8988

ESTUDIO TÉCNICO ACTUALIZADO PARA LA RESTAURACIÓN DEL ANTIGUO PALACIO MUNICIPAL (CASA DEL CORREGIDOR) MUNICIPIO DE SOGAMOSO.

VOLUMEN 1

Responsable:
ALVARO CABALLERO GUERRERO
T.P: 08202097740 ATL

Consultor
CONSORCIO CORREGIDOR 08

Representante Legal:
ANGIE CAROLINA ROJAS MONCADA
M.P: 2202-399511 COR

SOGAMOSO
MARZO 2022

DIRECCIÓN: Carrera 9 No. 22 -55 Sogamoso, Boyacá
CORREO ELECTRONICO: consorciocorregidor08@gmail.com
TELEFONO: 315 738 8988

TÍTULO DEL DOCUMENTO	ESTUDIOS TECNICOS DE VULNERABILIDAD Y PATOLOGIA ESTRUCTURAL
CONSULTOR Elaboración	Responsable: **ALVARO CABALLERO GUERRERO** Ingeniero Civil MsC
APROBACIÓN	**Arq. Pedro José López Reyes** Director de Consultoría M.P: 2570037525 CND
REVISIÓN Y APROBACION	**Arq. Mauricio Izquierdo Rodríguez** Supervisor de la Secretaria de Cultura Municipio de Sogamoso, Boyacá

Contenido

1. INTRODUCCIÓN 5
2. LOCALIZACIÓN 7
3. INFORMACION GENERAL 8
3.1 ANTECEDENTES 8
3.2 NOMBRE DEL PROYECTO 8
3.3 GENERALIDADES DE LA ESTRUCTURA 9
3.4 ALCANCE DEL PROYECTO 10
4. ANÁLISIS ESTRUCTURAL DEL EDIFICIO REFORZADO 11
4.1. ALCANCE DEL ANÁLISIS 11
5. ANÁLISIS DE CARGA 15
6. MEMORIAS ANALISIS ESTRUCTURAL 18
7. ANALISIS DE RESULTADOS 19

1. INTRODUCCIÓN

Durante la ejecución del contrato de Consultoría número 20210721 de 2021 cuyo objeto es: "ESTUDIO TÉCNICO ACTUALIZADO PARA LA RESTAURACIÓN DEL ANTIGUO PALACIO MUNICIPAL (CASA DEL CORREGIDOR) MUNICIPIO DE SOGAMOSO.", se incluye una descripción detallada sobre las metodologías requeridas por las normas nacionales NTC 3693, NTC 5551, Nsr-10 e internacionales (ACI 364 Y 562) que establece los requisitos mínimos que deben ser tenidos en cuenta para la evaluación, reparación y rehabilitación de estructuras de concreto antes de la intervención de una edificación, procedimientos que abarca todos los elementos de concreto estructurales, elementos prefabricados de concreto y elementos no estructurales para la obtención de un diagnóstico a través de un estudio de patología de la construcción, que permita determinar el estado actual de la Casa del Corregidor del Municipio de Sogamoso en el Departamento de Boyacá, y dar una calificación como lo establece el reglamento colombiano de construcciones sismo resistente Nsr-10 A.10.1.4 " El estado del sistema estructural debe calificarse con respecto a. (a).calidad del diseño de la estructura original y su sistema de cimentación y de la construcción de la misma y (b) el estado de mantenimiento y conservación,…".

Basado en la visita técnica ya realizada, para verificar el estado actual de las edificaciones existentes y proporcionar información inicial con respecto a la condición de las construcciones que integran la Casa del Corregidor del Municipio de Sogamoso. A continuación, se relacionan las diferentes fases en el proceso de investigación:

El estudio de patología de la construcción se fundamenta en dos tipos de investigación; Preliminar y detallada, cada una cuenta con las siguientes fases de investigación:

La fase de documentación comprende la revisión exhaustiva de la información existente de la edificación, su etapa constructiva correspondiente al diseño de la obra, intervenciones, rehabilitación, fuentes de información que permiten contextualizar el proyecto constructivo y evaluar algunas causas de los procesos patológicos. De esta forma, se determina la naturaleza y la cantidad de información que debe ser recopilada y analizada.

La fase de observación de campo permite el reconocimiento de la edificación, las condiciones del sitio y la constatación de la información recopilada en la etapa de documentación. Es así, que se verifica que la construcción esté conforme a la obra, se identifica el daño, desviaciones y deformaciones visibles, las cargas y factores medioambientales.

La fase toma de datos deduce el estado actual de conservación y mantenimiento de las edificaciones, con atención en daños y procesos patológicos existentes apoyados en el registro fotográfico. De esta forma, se realiza el levantamiento del daño que exige la digitalización de planos del levantamiento del daño. Posteriormente, se contrasta in situ los elementos que conforman la obra con los diseños levantamiento estructural y planos arquitectónicos originales para la verificación de la construcción conforme a la obra. Esta fase también contempla la identificación de las zonas de afectación según la tipología del proceso patológico en lesiones físicas, químicas, mecánicas, organismos vivos y antropogénicas.

En la fase muestreo, pruebas y análisis; se realiza a través de diferentes ensayos destructivos y no destructivos, esto con el objetivo de evaluar el estado y propiedades de los materiales que conforman las edificaciones.

Finalmente, se realiza un análisis de la información suministrada sobre el estado de actual de las edificaciones como un componente de la evaluación para establecer el diagnóstico frente a las causas de los procesos patológicos que afectan la funcionalidad y el compromiso estructural de la edificación.

2. LOCALIZACIÓN

Las instalaciones se localizan en el departamento de Boyacá, Municipio de Sogamoso, a 5 grados 42 minutos 57 segundos de latitud norte y a los 72 grados y 56 minutos 00 segundos de longitud occidental.

La cabecera municipal se encuentra a una distancia de 210 Km. de la capital de la República, por carretera pavimentada, su temperatura promedio es de 18 grados centígrados, la parte urbana está a una altura sobre el nivel del mar de 2500 msnm.

El municipio de Sogamoso está ubicado a 70 kilometros de Tunja ciudad capital dl departamento de Boyacá.

Figura 1: Localización del Municipio en Colombia

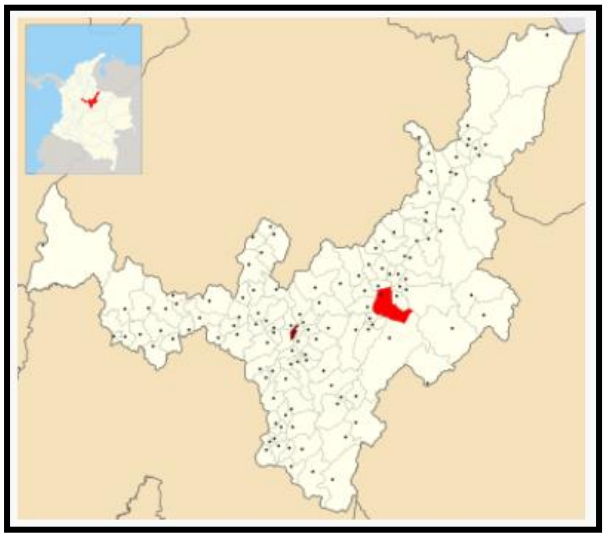

Figura 2: Localización del Municipio en Boyacá

Figura 3: localización Detallada de las instalaciones. Fotografías aéreas

3. INFORMACION GENERAL

3.1 ANTECEDENTES

De acuerdo con la visita técnica realizada, la edificación no presenta registros sobre la construcción, planimetría o algún tipo de memorial debido a la antigüedad de la misma y por los procesos nulos de la época.

3.2 NOMBRE DEL PROYECTO

La edificación objeto de estudio tienen como denominación "ESTUDIO TÉCNICO ACTUALIZADO PARA LA RESTAURACIÓN DEL ANTIGUO PALACIO MUNICIPAL (CASA DEL CORREGIDOR) MUNICIPIO DE SOGAMOSO".

Fotografía. Fachada de Casa del Corregidor.

3.3 GENERALIDADES DE LA ESTRUCTURA

La fase documental proporcionó la información necesaria para indagar sobre el uso de la edificación, así como también la información obtenida de la interacción entre la edificación y su medio ambiente.

La situación actual demanda el reforzamiento estructural, según resultados de estudio de vulnerabilidad y debido a que la edificación fue construida con anterioridad al reglamento vigente a la fecha (NSR-10).

La estructura a reforzar corresponde a un bloque de fachada, los cuales poseen tres niveles respectivamente

3.4 ALCANCE DEL PROYECTO

El proyecto contempla la propuesta para realizar el reforzamiento de la edificación. Se utilizarán los requisitos dados en el titulo A de la norma NSR-10, en la parte de "Evaluación e intervención de edificaciones construidas antes de la vigencia del reglamento", necesarios para llevar a cabo la evaluación del comportamiento sísmico luego de intervención, reparación o refuerzo de las estructuras en estudio.

Este informe abarca metodologías, cálculos, planos, especificaciones, conclusiones y recomendaciones, resultado del análisis realizado a la edificación de la casa del corregidor, cuyo contenido será anexado al presente informe.

4. ANÁLISIS ESTRUCTURAL DEL EDIFICIO REFORZADO

4.1. ALCANCE DEL ANÁLISIS

INFORMACION PRELIMINAR

PASO 1: De acuerdo al objeto del estudio, la estructura a intervenir hace parte de los siguientes alcances que se encuentran en la Norma:

Vulnerabilidad Sísmica
Reforzamiento estructural

Por lo que se puede decir que las estructuras a analizar se encuentran dentro del alcance y se sigue con los siguientes pasos.

PASO 2: Con respecto a la información existente de la estructura en estudio, se obtuvieron mediante levantamientos, ensayos y análisis de la edificación existente.

PASO 3: Con respecto al estado del sistema estructural general de la estructura, no contiene un sistema valido para la zona sísmica en que se encuentra.

EVALUACION DE LA ESTRUCTURA REFORZADA

PASOS 4 AL PASO 10: Solicitaciones equivalentes y análisis elástico de la estructura: La estructura se analiza con los resultados obtenidos del planteamiento estructural.

Movimientos sísmicos de diseño: De acuerdo al estudio de suelos realizado en la obra y del mapa de aceleraciones sísmica de Colombia en la NSR 10, A continuación, se denotan los datos de trabajo para el respectivo análisis estructural.

OBTENCIÓN DEL NIVEL DE AMENAZA SÍSMICA Y EL VALOR Aa Y Av, MOVIMIENTOS SÍSMICOS DE DISEÑO, CARACTERÍSTICAS DE LA ESTRUCTURACIÓN Y DEL MATERIAL ESTRUCTURAL EMPLEADO, GRADO DE IRREGULARIDAD:
Localización de la edificación en estudio dentro de los mapas de zonificación sísmica en el capítulo A.2 del reglamento NSR-10, y determinación del nivel de amenaza sísmica del lugar, de acuerdo al valor

del parámetro Aa obtenido en los mapas. Como la edificación se encuentra en el Municipio de Sogamoso en el Departamento de Boyacá, los datos obtenidos de la norma son:

Figura 1. Mapa de zonificación sísmica de Colombia

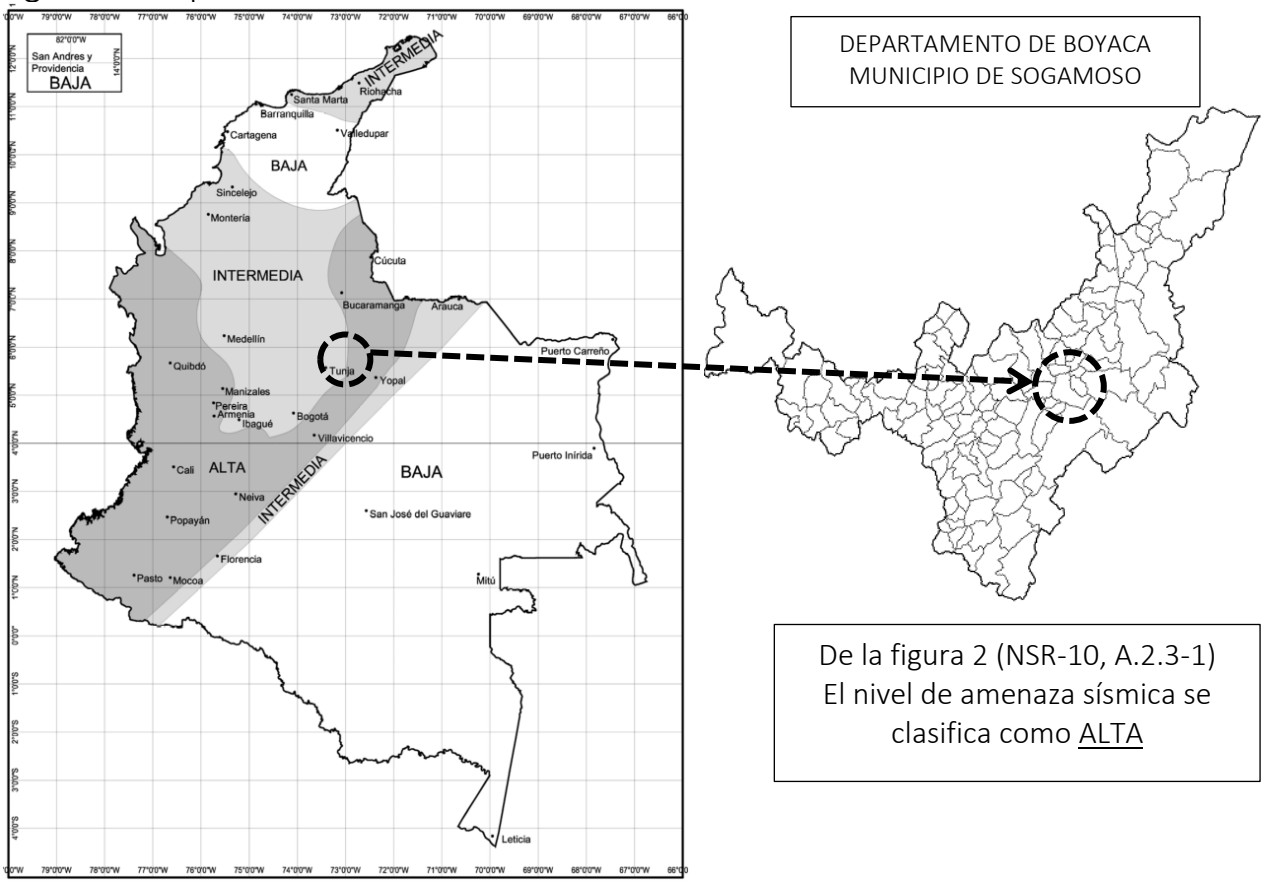

De las figuras 2 y 4 (NSR-10 A.2.3-2 y A.2.3-3), el municipio de Sogamoso tiene un valor del coeficiente Aa de 0.25 y un Av de 0.25. El perfil de Suelo según el estudio Geotécnico es E.

Figura 2. Mapa de valores de Aa

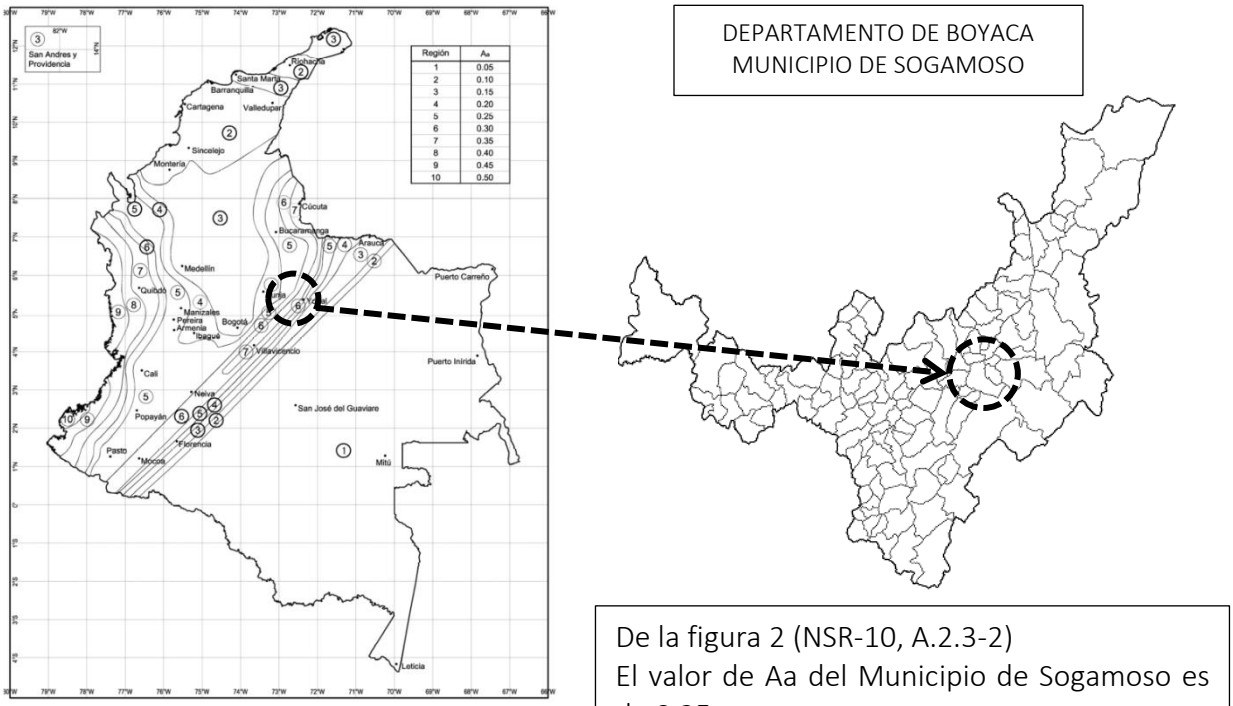

De la figura 2 (NSR-10, A.2.3-2)
El valor de Aa del Municipio de Sogamoso es de 0.25

Figura 3. Mapa de valores de Av

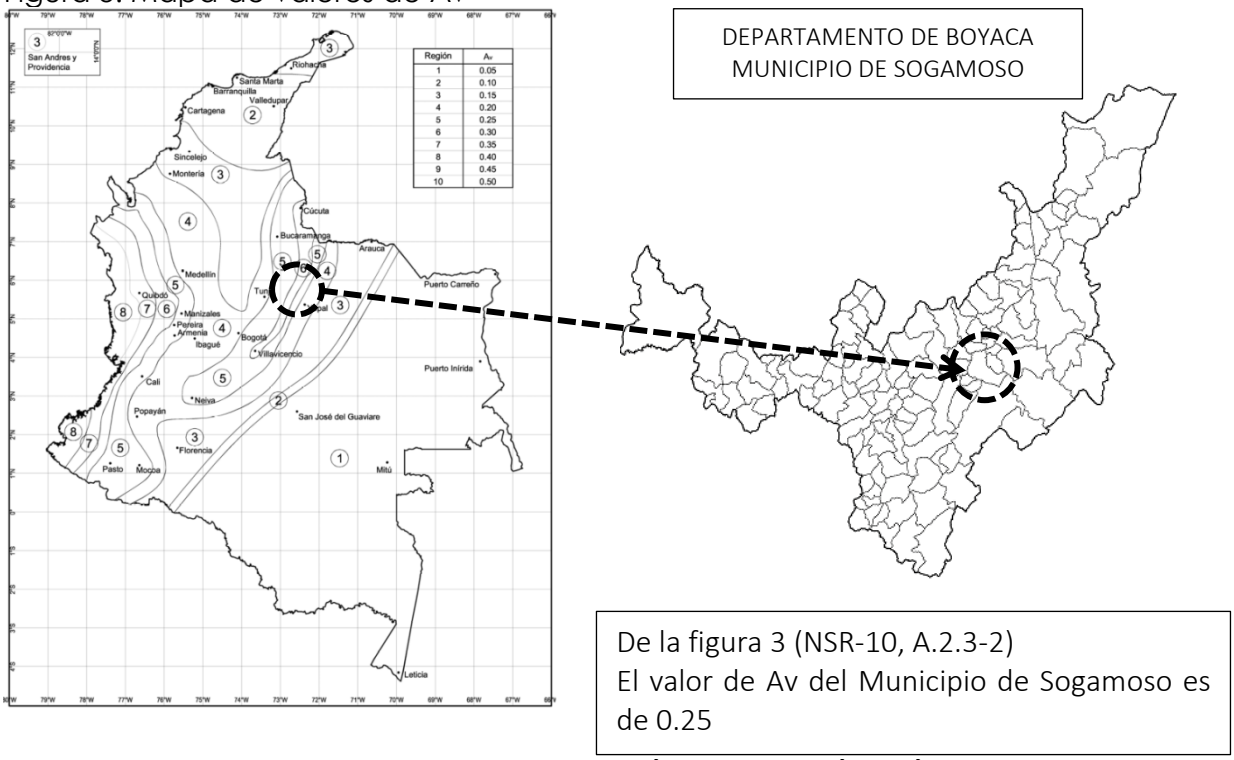

De la figura 3 (NSR-10, A.2.3-2)
El valor de Av del Municipio de Sogamoso es de 0.25

Coeficiente de capacidad de disipación de energía "R´": De acuerdo al sistema estructural planteado y aislado de las estructuras adicionales, se establece un R´ de 7.0.

$R = \phi a \cdot \phi p \cdot \phi r \cdot R_0$

ϕa= 1.0 (coeficiente de reducción de capacidad de disipación de energía por irregularidad de altura de la edificación)
ϕp= 1.0 (coeficiente de reducción de capacidad de disipación de energía por irregularidad en planta de la edificación)
ϕr= 1.0 (coeficiente de reducción de capacidad de disipación de energía por ausencia de redundancia en el sistema de resistencia sísmica)

R_0=7.0 (coeficiente de reducción de capacidad de disipación de energía por ausencia de redundancia en el sistema de resistencia sísmica)

C. SISTEMA DE PÓRTICO RESISTENTE A MOMENTOS		Valor R_0 (Nota 2)	Valor Ω_0 (Nota 4)	zonas de amenaza sísmica					
				Alta		Intermedia		baja	
Sistema resistencia sísmica (fuerzas horizontales)	Sistema resistencia para cargas verticales			uso permit	altura máx.	uso permit	altura máx.	uso permit	altura máx.
1. Pórticos resistentes a momentos con capacidad especial de disipación de energía (*DES*)									
a. De concreto (*DES*)	el mismo	**7.0**	**3.0**	si	sin límite	si	sin límite	si	sin límite
b. De acero (*DES*)	el mismo	**7.0** (Nota-3)	**3.0**	si	sin límite	si	sin límite	si	sin límite
c. Mixtos	Pórticos de acero o mixtos resistentes o no a momentos	**7.0**	**3.0**	si	sin límite	si	sin límite	si	sin límite
d. De acero con cerchas dúctiles (*DES*)	Pórticos de acero resistentes o no a momentos	**6.0**	**3.0**	si	30 m	si	45 m	si	sin límite

Tabla A.3-3 – Capitulo A.3 del Titulo A – NSR-10

Para el análisis de la estructura se tomara el valor de R0 de 7.0, como se indica en la tabla.

$R = \phi a \cdot \phi p \cdot \phi r \cdot R_0$
$R = 1 \times 1 \times 1 \times 7$
$R = 7$

5. ANÁLISIS DE CARGA

El siguiente análisis se encuentra basado en los lineamientos del reglamento colombiano de construcción sismo resistente NSR-10, en su apartado del título B. para cargas mínimas de diseño.

Valores mínimos de carga viva:

Ocupación o uso		Carga uniforme (kN/m²) m² de área en planta	Carga uniforme (kgf/m²) m² de área en planta
Reunión	Balcones	5.0	500
	Corredores y escaleras	5.0	500
	Silletería fija (fijada al piso)	3.0	300
	Gimnasios	5.0	500
	Vestíbulos	5.0	500
	Silletería móvil	5.0	500
	Áreas recreativas	5.0	500
	Plataformas	5.0	500
	Escenarios	7.5	750
Oficinas	Corredores y escaleras	3.0	300
	Oficinas	2.0	200
	Restaurantes	5.0	500
Educativos	Salones de clase	2.0	200
	Corredores y escaleras	5.0	500
	Bibliotecas		
	Salones de lectura	2.0	200
	Estanterías	7.0	700
Fábricas	Industrias livianas	5.0	500
	Industrias pesadas	10.0	1000
Institucional	Cuartos de cirugía, laboratorios	4.0	400
	Cuartos privados	2.0	200
	Corredores y escaleras	5.0	500
Comercio	Minorista	5.0	500
	Mayorista	6.0	600
Residencial	Balcones	5.0	500
	Cuartos privados y sus corredores	1.8	180
	Escaleras	3.0	300
Almacenamiento	Liviano	6.0	600
	Pesado	12.0	1200
Garajes	Garajes para automóviles de pasajeros	2.5	250
	Garajes para vehículos de carga de hasta 2.000 kg de capacidad.	5.0	500
Coliseos y Estadios	Graderías	5.0	500
	Escaleras	5.0	500

Tabla B.4.2.1-1 – Capitulo B.4 del Título B – NSR-10

Tipo de cubierta	*Carga uniforme* (kN/m²) *m² de área en planta*	*Carga uniforme* (kgf/m²) *m² de área en planta*
Cubiertas, Azoteas y Terrazas	la misma del resto de la edificación (Nota-1)	la misma del resto de la edificación (Nota-1)
Cubiertas usadas para jardines de cubierta o para reuniones	5.00	500
Cubiertas inclinadas con más de 15° de pendiente en estructura metálica o de madera con imposibilidad física de verse sometidas a cargas superiores a la aquí estipulada	0.35	35
Cubiertas inclinadas con pendiente de 15° o menos en estructura metálica o de madera con imposibilidad física de verse sometidas a cargas superiores a la aquí estipulada	0.50	50

Tabla B.4.2.1-2 – Capitulo B.4 del Título B – NSR-10

Valores mínimos de carga muerta:

Ocupación		Fachada y particiones (kN/m²) m² de área en planta	Afinado de piso y cubierta (kN/m²) m² de área en planta	Fachada y particiones (kgf/m²) m² de área en planta	Afinado de piso y cubierta (kgf/m²) m² de área en planta
Reunión	Edificaciones con un salón de reunión para menos de 100 personas y sin escenarios.	1.0	1.8	100	180
Oficinas	Particiones móviles de altura total	1.0	1.8	100	180
	Particiones fijas de mampostería	2.0	1.8	200	180
Educativos	Salones de clase	2.0	1.5	200	150
Fábricas	Industrias livianas	0.8	1.6	80	160
Institucional	Internados con atención a los residentes	2.0	1.6	200	160
	Prisiones, cárceles, reformatorios y centros de detención	2.5	1.8	250	180
	Guarderías.	2.0	1.6	200	160
Comercio	Exhibición y venta de mercancías.	1.5	1.4	150	140
Residencial	Fachada y particiones de mampostería.	3.0	1.6	300	160
	Fachada y particiones livianas.	2.0	1.4	200	140
Almacena-miento	Almacenamiento de materiales livianos.	1.5	1.5	150	150
Garajes	Garajes para vehículos con capacidad de hasta 2000 kg	0.2	1.0	20	100

Tabla B.3.4.3-1 – Capitulo B.3 del Título B – NSR-10

Cargas de diseño para análisis:
Teniendo en cuenta que la edificación en estudio tiene ocupaciones de tipo Oficinas, Reunión e Institucional y verificando el uso recurrente de las divisiones que se manejan dentro de la casa de la cultura, las cargas a utilizar serán las siguientes.

Carga viva de entrepisos:
Áreas de corredores y escaleras= 500 Kg/m2
Áreas de oficinas= 200 Kg/m2
Cuartos Privados= 200 Kg/m2
Balcones= 500 Kg/m2

Carga viva de cubierta:
Áreas de cubierta transitable= 500 Kg/m2

Carga muerta entrepisos y cubierta:
Cargas muertas por elementos no verticales= 50 Kg/m2
Cargar muertas por elementos verticales= 150 Kg/m2

RESUMEN DE DATOS DE ENTRADA PARA ANÁLISIS ESTRUCTURAL

GRUPO DE USO=	II
CAPACIDAD DE DISIPACIÓN DE ENERGÍA=	DES
RESISTENCIA CONCRETO ZONA REF=	1785Psi– 4857Psi
RESISTENCIA CONCRETO ANTIGUO=	1643Psi– 3043Psi
ACERO DE REFUERZO=	60.000 Psi
ZONA DE AMENAZA SISMICA=	Alta
PERFIL DE SUELO=	E
COEFICIENTE Aa=	0.25
COEFICIENTE Av=	0.25
COEFICIENTE Fa=	1.45
COEFICIENTE Fv=	3.0
COEFICIENTE Ae=	0.16
COEFICIENTE Ad=	0.08
COEFICIENTE DE DISIPACIÓN DE ENERGÍA R=	7.0
CARGA VIVA ENTREPISO=	200 Kg/m2 – 500 Kg/m2
CARGA VIVA DE CUBIERTA=	590 Kg/m2
CARGA MUERTA=	200 Kg/m2

6. MEMORIAS ANALISIS ESTRUCTURAL

A continuación se anexan las memorias de cálculo correspondientes al análisis estructural de la edificación reforzada de la Casa del Corregidor, según los datos de los estudios realizados.

Para evaluar la edificación se utilizó el software de SAP2000

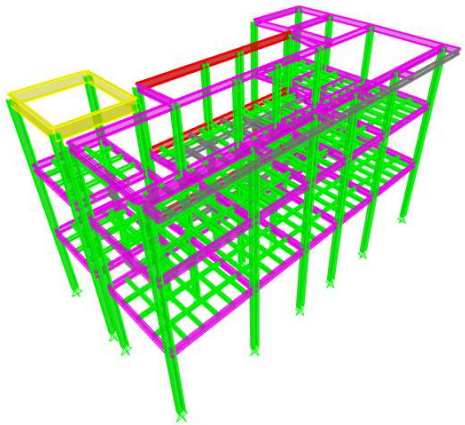

SAP2000 Analysis Report

Prepared by

ALVARO RAFAEL CABALLERO GUERRERO

Model Name: MEMORIAS DE DISEÑO ESTRUCTURAL EDIFICIO CORREGIDOR REFORZADO.

Abril de 2022

Contents

1. Model geometry
1.1. Joint coordinates
1.2. Joint restraints
1.3. Element connectivity
2. Material properties
3. Section properties
3.1. Frames
3.2. Areas
3.3. Solids
4. Load patterns
4.1. Definitions
5. Load cases
5.1. Definitions
5.2. Static case load assignments
5.3. Response spectrum case load assignments
6. Load combinations
7. Structure results
7.1. Mass summary
7.2. Modal results
7.3. Base reactions
8. Joint results
9. Frame results
10. Area results
11. Material take-off
12. Design preferences
12.1. Steel design
12.2. Concrete design
12.3. Aluminum design
12.4. Cold formed design
13. Design overwrites
13.1. Steel design
14. Design summary
14.1. Steel design

List of Figures

Figure 1: Finite element model
Figure 2: Deformed shape

List of Tables

Table 1: Joint Coordinates
Table 2: Joint Restraint Assignments
Table 3: Connectivity - Frame
Table 4: Frame Section Assignments
Table 5: Connectivity - Area
Table 6: Area Section Assignments
Table 7: Material Properties 02 - Basic Mechanical Properties
Table 8: Material Properties 03a - Steel Data
Table 9: Material Properties 03b - Concrete Data
Table 10: Material Properties 03e - Rebar Data

Table 11: Material Properties 03f - Tendon Data
Table 12: Frame Section Properties 01 - General, Part 1 of 4
Table 12: Frame Section Properties 01 - General, Part 2 of 4
Table 12: Frame Section Properties 01 - General, Part 3 of 4
Table 12: Frame Section Properties 01 - General, Part 4 of 4
Table 13: Frame Section Properties 02 - Concrete Column, Part 1 of 2
Table 13: Frame Section Properties 02 - Concrete Column, Part 2 of 2
Table 14: Frame Section Properties 03 - Concrete Beam, Part 1 of 2
Table 14: Frame Section Properties 03 - Concrete Beam, Part 2 of 2
Table 15: Frame Property Modifiers, Part 1 of 2
Table 15: Frame Property Modifiers, Part 2 of 2
Table 16: Area Section Properties, Part 1 of 3
Table 16: Area Section Properties, Part 2 of 3
Table 16: Area Section Properties, Part 3 of 3
Table 17: Solid Property Definitions
Table 18: Load Pattern Definitions
Table 19: Load Case Definitions, Part 1 of 2
Table 19: Load Case Definitions, Part 2 of 2
Table 20: Case - Static 1 - Load Assignments
Table 21: Case - Response Spectrum 1 - General, Part 1 of 2
Table 21: Case - Response Spectrum 1 - General, Part 2 of 2
Table 22: Case - Response Spectrum 2 - Load Assignments
Table 23: Function - Response Spectrum - User
Table 24: Combination Definitions
Table 25: Assembled Joint Masses, Part 1 of 2
Table 25: Assembled Joint Masses, Part 2 of 2
Table 26: Modal Participating Mass Ratios
Table 27: Base Reactions
Table 28: Joint Displacements
Table 29: Joint Reactions
Table 30: Element Forces - Frames, Part 1 of 2
Table 30: Element Forces - Frames, Part 2 of 2
Table 31: Element Forces - Area Shells, Part 1 of 2
Table 31: Element Forces - Area Shells, Part 2 of 2
Table 32: Element Stresses - Area Shells, Part 1 of 3
Table 32: Element Stresses - Area Shells, Part 2 of 3
Table 32: Element Stresses - Area Shells, Part 3 of 3
Table 33: Material List 2 - By Section Property
Table 34: Preferences - Steel Design - AISC 360-10, Part 1 of 4
Table 34: Preferences - Steel Design - AISC 360-10, Part 2 of 4
Table 34: Preferences - Steel Design - AISC 360-10, Part 3 of 4
Table 34: Preferences - Steel Design - AISC 360-10, Part 4 of 4
Table 35: Preferences - Concrete Design - ACI 318-14, Part 1 of 2
Table 35: Preferences - Concrete Design - ACI 318-14, Part 2 of 2
Table 36: Preferences - Aluminum Design - AA-ASD 2000
Table 37: Preferences - Cold Formed Design - AISI-ASD96
Table 38: Overwrites - Steel Design - AISC 360-10, Part 1 of 7
Table 38: Overwrites - Steel Design - AISC 360-10, Part 2 of 7
Table 38: Overwrites - Steel Design - AISC 360-10, Part 3 of 7
Table 38: Overwrites - Steel Design - AISC 360-10, Part 4 of 7
Table 38: Overwrites - Steel Design - AISC 360-10, Part 5 of 7
Table 38: Overwrites - Steel Design - AISC 360-10, Part 6 of 7
Table 38: Overwrites - Steel Design - AISC 360-10, Part 7 of 7
Table 39: Steel Design 1 - Summary Data - AISC 360-10, Part 1 of 2
Table 39: Steel Design 1 - Summary Data - AISC 360-10, Part 2 of 2

1. Model geometry

This section provides model geometry information, including items such as joint coordinates, joint restraints, and element connectivity.

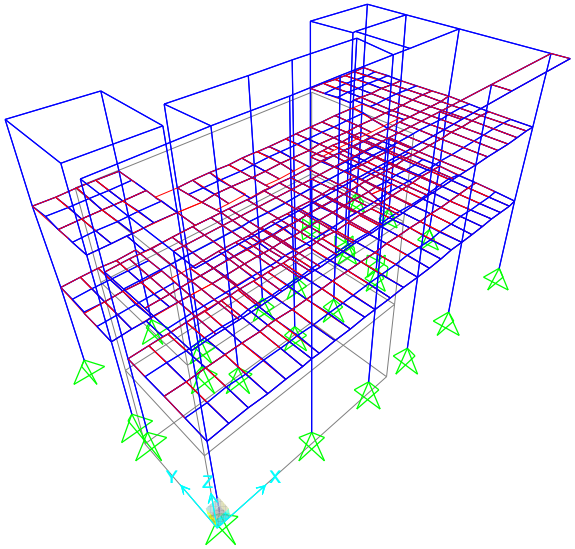

Figure 1: Finite element model

1.1. Joint coordinates

Table 1: Joint Coordinates

Table 1: Joint Coordinates

Joint	CoordSys	CoordType	GlobalX	GlobalY	GlobalZ
			m	m	m
1	GLOBAL	Cartesian	0.37992	11.14739	0.
2	GLOBAL	Cartesian	0.37992	11.14739	4.7
3	GLOBAL	Cartesian	0.37992	6.67804	0.
4	GLOBAL	Cartesian	0.37992	6.67804	4.7
5	GLOBAL	Cartesian	0.37992	5.42804	0.
6	GLOBAL	Cartesian	0.37992	5.42804	4.7
7	GLOBAL	Cartesian	0.37992	0.37981	0.
8	GLOBAL	Cartesian	0.37992	0.37981	4.7
9	GLOBAL	Cartesian	5.37992	0.37981	0.
10	GLOBAL	Cartesian	5.37992	0.37981	4.7
11	GLOBAL	Cartesian	5.37992	5.42804	0.

Table 1: Joint Coordinates

Joint	CoordSys	CoordType	GlobalX	GlobalY	GlobalZ
			m	m	m
12	GLOBAL	Cartesian	5.37992	5.42804	4.7
13	GLOBAL	Cartesian	4.18644	6.67814	0.
14	GLOBAL	Cartesian	4.18644	6.67814	4.7
15	GLOBAL	Cartesian	5.22433	8.21588	0.
16	GLOBAL	Cartesian	5.22433	8.21588	4.7
17	GLOBAL	Cartesian	4.18644	11.14739	0.
18	GLOBAL	Cartesian	4.18644	11.14739	4.7
19	GLOBAL	Cartesian	9.4166	8.21588	0.
20	GLOBAL	Cartesian	9.4166	8.21588	4.7
21	GLOBAL	Cartesian	11.96517	8.21588	0.
22	GLOBAL	Cartesian	11.96517	8.21588	4.7
23	GLOBAL	Cartesian	12.15009	5.42804	0.
24	GLOBAL	Cartesian	12.15009	5.42804	4.7
25	GLOBAL	Cartesian	9.17992	5.42804	0.
26	GLOBAL	Cartesian	9.17992	5.42804	4.7
27	GLOBAL	Cartesian	9.17992	0.37981	0.
28	GLOBAL	Cartesian	9.17992	0.37981	4.7
29	GLOBAL	Cartesian	12.15009	0.37981	0.
30	GLOBAL	Cartesian	12.15009	0.37981	4.7
31	GLOBAL	Cartesian	15.75009	0.37981	0.
32	GLOBAL	Cartesian	15.75009	0.37981	4.7
33	GLOBAL	Cartesian	20.90009	0.37981	0.
34	GLOBAL	Cartesian	20.90009	0.37981	4.7
35	GLOBAL	Cartesian	21.11374	5.45304	0.
36	GLOBAL	Cartesian	21.11374	5.45304	4.7
37	GLOBAL	Cartesian	21.11374	8.80214	0.
38	GLOBAL	Cartesian	21.11374	8.80214	4.7
39	GLOBAL	Cartesian	21.09355	11.61034	0.
40	GLOBAL	Cartesian	21.09355	11.61034	4.7
41	GLOBAL	Cartesian	15.75009	5.42804	0.
42	GLOBAL	Cartesian	15.75009	5.42804	4.7
43	GLOBAL	Cartesian	16.33083	8.21588	0.
44	GLOBAL	Cartesian	16.33083	8.21588	4.7
45	GLOBAL	Cartesian	16.75514	6.16002	0.
46	GLOBAL	Cartesian	16.75514	6.16002	4.7
47	GLOBAL	Cartesian	16.75514	8.79864	0.
48	GLOBAL	Cartesian	16.75514	8.79864	4.7
49	GLOBAL	Cartesian	16.53787	11.6397	0.
50	GLOBAL	Cartesian	16.53787	11.6397	4.7
51	GLOBAL	Cartesian	4.18644	5.42804	4.7
52	GLOBAL	Cartesian	6.0056	5.72804	4.7
53	GLOBAL	Cartesian	6.0056	6.60809	4.7
54	GLOBAL	Cartesian	6.0056	8.21588	4.7
55	GLOBAL	Cartesian	0.37992	2.90892	4.7
56	GLOBAL	Cartesian	1.31492	2.90892	4.7
57	GLOBAL	Cartesian	2.21492	2.90892	4.7
58	GLOBAL	Cartesian	3.11492	2.90892	4.7
59	GLOBAL	Cartesian	4.01492	2.90892	4.7
60	GLOBAL	Cartesian	4.91492	2.90892	4.7
61	GLOBAL	Cartesian	5.37992	2.90892	4.7
62	GLOBAL	Cartesian	5.81492	2.90892	4.7
63	GLOBAL	Cartesian	6.71492	2.90892	4.7
64	GLOBAL	Cartesian	7.61492	2.90892	4.7
65	GLOBAL	Cartesian	8.51492	2.90892	4.7

Table 1: Joint Coordinates

Joint	CoordSys	CoordType	GlobalX	GlobalY	GlobalZ
			m	m	m
66	GLOBAL	Cartesian	9.17992	2.90892	4.7
67	GLOBAL	Cartesian	10.215	2.90892	4.7
68	GLOBAL	Cartesian	11.115	2.90892	4.7
69	GLOBAL	Cartesian	12.15009	2.90892	4.7
70	GLOBAL	Cartesian	13.08509	2.90892	4.7
71	GLOBAL	Cartesian	13.98509	2.90892	4.7
72	GLOBAL	Cartesian	14.88509	2.90892	4.7
73	GLOBAL	Cartesian	15.75009	2.90892	4.7
74	GLOBAL	Cartesian	16.68509	2.90892	4.7
75	GLOBAL	Cartesian	17.58509	2.90892	4.7
76	GLOBAL	Cartesian	18.48509	2.90892	4.7
77	GLOBAL	Cartesian	19.38509	2.90892	4.7
78	GLOBAL	Cartesian	20.28509	2.90892	4.7
79	GLOBAL	Cartesian	21.0066	2.90892	4.7
80	GLOBAL	Cartesian	1.31492	0.37981	4.7
81	GLOBAL	Cartesian	2.21492	0.37981	4.7
82	GLOBAL	Cartesian	3.11492	0.37981	4.7
83	GLOBAL	Cartesian	4.01492	0.37981	4.7
84	GLOBAL	Cartesian	4.91492	0.37981	4.7
85	GLOBAL	Cartesian	5.81492	0.37981	4.7
86	GLOBAL	Cartesian	6.71492	0.37981	4.7
87	GLOBAL	Cartesian	7.61492	0.37981	4.7
88	GLOBAL	Cartesian	8.51492	0.37981	4.7
89	GLOBAL	Cartesian	10.215	0.37981	4.7
90	GLOBAL	Cartesian	11.115	0.37981	4.7
91	GLOBAL	Cartesian	13.08509	0.37981	4.7
92	GLOBAL	Cartesian	13.98509	0.37981	4.7
93	GLOBAL	Cartesian	14.88509	0.37981	4.7
94	GLOBAL	Cartesian	16.68509	0.37981	4.7
95	GLOBAL	Cartesian	17.58509	0.37981	4.7
96	GLOBAL	Cartesian	18.48509	0.37981	4.7
97	GLOBAL	Cartesian	19.38509	0.37981	4.7
98	GLOBAL	Cartesian	20.28509	0.37981	4.7
99	GLOBAL	Cartesian	1.31492	5.42804	4.7
100	GLOBAL	Cartesian	2.21492	5.42804	4.7
101	GLOBAL	Cartesian	3.11492	5.42804	4.7
102	GLOBAL	Cartesian	4.01492	5.42804	4.7
103	GLOBAL	Cartesian	4.91492	5.42804	4.7
104	GLOBAL	Cartesian	5.81492	5.42804	4.7
105	GLOBAL	Cartesian	6.71492	5.42804	4.7
106	GLOBAL	Cartesian	7.61492	5.42804	4.7
107	GLOBAL	Cartesian	8.51492	5.42804	4.7
108	GLOBAL	Cartesian	10.215	5.42804	4.7
109	GLOBAL	Cartesian	11.115	5.42804	4.7
110	GLOBAL	Cartesian	13.08509	5.42804	4.7
111	GLOBAL	Cartesian	13.98509	5.42804	4.7
112	GLOBAL	Cartesian	14.88509	5.42804	4.7
113	GLOBAL	Cartesian	16.68509	5.4324	4.7
114	GLOBAL	Cartesian	17.58509	5.4366	4.7
115	GLOBAL	Cartesian	18.48509	5.44054	4.7
116	GLOBAL	Cartesian	19.38509	5.44499	4.7
117	GLOBAL	Cartesian	20.28509	5.44918	4.7
118	GLOBAL	Cartesian	1.97969	5.42804	4.7
119	GLOBAL	Cartesian	6.88536	5.42804	4.7

Table 1: Joint Coordinates

Joint	CoordSys	CoordType	GlobalX	GlobalY	GlobalZ
			m	m	m
120	GLOBAL	Cartesian	7.96236	5.42804	4.7
121	GLOBAL	Cartesian	10.34433	5.42804	4.7
122	GLOBAL	Cartesian	11.42133	5.42804	4.7
123	GLOBAL	Cartesian	1.31492	11.14739	4.7
124	GLOBAL	Cartesian	2.21492	11.14739	4.7
125	GLOBAL	Cartesian	3.11492	11.14739	4.7
126	GLOBAL	Cartesian	0.37992	8.91272	4.7
127	GLOBAL	Cartesian	1.31492	6.67807	4.7
128	GLOBAL	Cartesian	1.97969	6.67809	4.7
129	GLOBAL	Cartesian	2.21492	6.67809	4.7
130	GLOBAL	Cartesian	3.11492	6.67812	4.7
131	GLOBAL	Cartesian	4.18644	8.91277	4.7
132	GLOBAL	Cartesian	1.31492	8.91273	4.7
133	GLOBAL	Cartesian	2.21492	8.91274	4.7
134	GLOBAL	Cartesian	3.11492	8.91275	4.7
135	GLOBAL	Cartesian	5.31406	6.60809	4.7
136	GLOBAL	Cartesian	6.88536	6.60809	4.7
137	GLOBAL	Cartesian	7.96236	6.60809	4.7
138	GLOBAL	Cartesian	8.73378	6.60809	4.7
139	GLOBAL	Cartesian	9.63378	6.60809	4.7
140	GLOBAL	Cartesian	10.34433	6.60809	4.7
141	GLOBAL	Cartesian	11.42133	6.60809	4.7
142	GLOBAL	Cartesian	12.15009	6.60809	4.7
143	GLOBAL	Cartesian	13.08509	6.60809	4.7
144	GLOBAL	Cartesian	13.98509	6.60809	4.7
145	GLOBAL	Cartesian	14.88509	6.60809	4.7
146	GLOBAL	Cartesian	15.99591	6.60809	4.7
147	GLOBAL	Cartesian	16.75514	6.60809	4.7
148	GLOBAL	Cartesian	20.28509	8.80147	4.7
149	GLOBAL	Cartesian	20.28509	11.61555	4.7
150	GLOBAL	Cartesian	19.38509	8.80075	4.7
151	GLOBAL	Cartesian	19.38509	11.62135	4.7
152	GLOBAL	Cartesian	18.48509	8.80003	4.7
153	GLOBAL	Cartesian	18.48509	11.62715	4.7
154	GLOBAL	Cartesian	17.58509	8.7993	4.7
155	GLOBAL	Cartesian	17.58509	11.63295	4.7
156	GLOBAL	Cartesian	0.37992	11.14739	9.1
157	GLOBAL	Cartesian	0.37992	6.67804	9.1
158	GLOBAL	Cartesian	4.18644	11.14739	9.1
159	GLOBAL	Cartesian	4.18644	6.67814	9.1
160	GLOBAL	Cartesian	5.22433	8.21588	9.1
161	GLOBAL	Cartesian	0.37992	5.42804	9.1
162	GLOBAL	Cartesian	5.37992	5.42804	9.1
163	GLOBAL	Cartesian	0.37992	0.37981	9.1
164	GLOBAL	Cartesian	5.37992	0.37981	9.1
165	GLOBAL	Cartesian	9.17992	0.37981	9.1
166	GLOBAL	Cartesian	12.15009	0.37981	9.1
167	GLOBAL	Cartesian	15.75009	0.37981	9.1
168	GLOBAL	Cartesian	20.90009	0.37981	9.1
169	GLOBAL	Cartesian	21.11374	5.45304	9.1
170	GLOBAL	Cartesian	21.11374	8.80214	9.1
171	GLOBAL	Cartesian	21.09355	11.61034	9.1
172	GLOBAL	Cartesian	16.53787	11.6397	9.1
173	GLOBAL	Cartesian	16.75514	8.79864	9.1

Table 1: Joint Coordinates

Joint	CoordSys	CoordType	GlobalX	GlobalY	GlobalZ
			m	m	m
174	GLOBAL	Cartesian	16.33083	8.21588	9.1
175	GLOBAL	Cartesian	11.96517	8.21588	9.1
176	GLOBAL	Cartesian	9.4166	8.21588	9.1
177	GLOBAL	Cartesian	9.17992	5.42804	9.1
178	GLOBAL	Cartesian	12.15009	5.42804	9.1
179	GLOBAL	Cartesian	15.75009	5.42804	9.1
180	GLOBAL	Cartesian	4.18644	5.42804	9.1
181	GLOBAL	Cartesian	6.0056	5.72804	9.1
182	GLOBAL	Cartesian	6.0056	6.60809	9.1
183	GLOBAL	Cartesian	6.0056	8.21588	9.1
184	GLOBAL	Cartesian	0.37992	2.90892	9.1
185	GLOBAL	Cartesian	1.31492	2.90892	9.1
186	GLOBAL	Cartesian	2.21492	2.90892	9.1
187	GLOBAL	Cartesian	3.11492	2.90892	9.1
188	GLOBAL	Cartesian	4.01492	2.90892	9.1
189	GLOBAL	Cartesian	4.91492	2.90892	9.1
190	GLOBAL	Cartesian	5.37992	2.90892	9.1
191	GLOBAL	Cartesian	5.81492	2.90892	9.1
192	GLOBAL	Cartesian	6.71492	2.90892	9.1
193	GLOBAL	Cartesian	7.61492	2.90892	9.1
194	GLOBAL	Cartesian	8.51492	2.90892	9.1
195	GLOBAL	Cartesian	9.17992	2.90892	9.1
196	GLOBAL	Cartesian	10.215	2.90892	9.1
197	GLOBAL	Cartesian	11.115	2.90892	9.1
198	GLOBAL	Cartesian	12.15009	2.90892	9.1
199	GLOBAL	Cartesian	13.08509	2.90892	9.1
200	GLOBAL	Cartesian	13.98509	2.90892	9.1
201	GLOBAL	Cartesian	14.88509	2.90892	9.1
202	GLOBAL	Cartesian	15.75009	2.90892	9.1
203	GLOBAL	Cartesian	16.68509	2.90892	9.1
204	GLOBAL	Cartesian	17.58509	2.90892	9.1
205	GLOBAL	Cartesian	18.48509	2.90892	9.1
206	GLOBAL	Cartesian	19.38509	2.90892	9.1
207	GLOBAL	Cartesian	20.28509	2.90892	9.1
208	GLOBAL	Cartesian	21.0066	2.90892	9.1
209	GLOBAL	Cartesian	1.31492	0.37981	9.1
210	GLOBAL	Cartesian	2.21492	0.37981	9.1
211	GLOBAL	Cartesian	3.11492	0.37981	9.1
212	GLOBAL	Cartesian	4.01492	0.37981	9.1
213	GLOBAL	Cartesian	4.91492	0.37981	9.1
214	GLOBAL	Cartesian	5.81492	0.37981	9.1
215	GLOBAL	Cartesian	6.71492	0.37981	9.1
216	GLOBAL	Cartesian	7.61492	0.37981	9.1
217	GLOBAL	Cartesian	8.51492	0.37981	9.1
218	GLOBAL	Cartesian	10.215	0.37981	9.1
219	GLOBAL	Cartesian	11.115	0.37981	9.1
220	GLOBAL	Cartesian	13.08509	0.37981	9.1
221	GLOBAL	Cartesian	13.98509	0.37981	9.1
222	GLOBAL	Cartesian	14.88509	0.37981	9.1
223	GLOBAL	Cartesian	16.68509	0.37981	9.1
224	GLOBAL	Cartesian	17.58509	0.37981	9.1
225	GLOBAL	Cartesian	18.48509	0.37981	9.1
226	GLOBAL	Cartesian	19.38509	0.37981	9.1
227	GLOBAL	Cartesian	20.28509	0.37981	9.1

Table 1: Joint Coordinates

Joint	CoordSys	CoordType	GlobalX	GlobalY	GlobalZ
			m	m	m
228	GLOBAL	Cartesian	1.31492	5.42804	9.1
229	GLOBAL	Cartesian	2.21492	5.42804	9.1
230	GLOBAL	Cartesian	3.11492	5.42804	9.1
231	GLOBAL	Cartesian	4.01492	5.42804	9.1
232	GLOBAL	Cartesian	4.91492	5.42804	9.1
233	GLOBAL	Cartesian	5.81492	5.42804	9.1
234	GLOBAL	Cartesian	6.71492	5.42804	9.1
235	GLOBAL	Cartesian	7.61492	5.42804	9.1
236	GLOBAL	Cartesian	8.51492	5.42804	9.1
237	GLOBAL	Cartesian	10.215	5.42804	9.1
238	GLOBAL	Cartesian	11.115	5.42804	9.1
239	GLOBAL	Cartesian	13.08509	5.42804	9.1
240	GLOBAL	Cartesian	13.98509	5.42804	9.1
241	GLOBAL	Cartesian	14.88509	5.42804	9.1
242	GLOBAL	Cartesian	16.68509	5.4324	9.1
243	GLOBAL	Cartesian	17.58509	5.4366	9.1
244	GLOBAL	Cartesian	18.48509	5.44054	9.1
245	GLOBAL	Cartesian	19.38509	5.44499	9.1
246	GLOBAL	Cartesian	20.28509	5.44918	9.1
247	GLOBAL	Cartesian	1.97969	5.42804	9.1
248	GLOBAL	Cartesian	6.88536	5.42804	9.1
249	GLOBAL	Cartesian	7.96236	5.42804	9.1
250	GLOBAL	Cartesian	10.34433	5.42804	9.1
251	GLOBAL	Cartesian	11.42133	5.42804	9.1
252	GLOBAL	Cartesian	1.31492	11.14739	9.1
253	GLOBAL	Cartesian	2.21492	11.14739	9.1
254	GLOBAL	Cartesian	3.11492	11.14739	9.1
255	GLOBAL	Cartesian	0.37992	8.91272	9.1
256	GLOBAL	Cartesian	1.31492	6.67807	9.1
257	GLOBAL	Cartesian	1.97969	6.67809	9.1
258	GLOBAL	Cartesian	2.21492	6.67809	9.1
259	GLOBAL	Cartesian	3.11492	6.67812	9.1
260	GLOBAL	Cartesian	4.18644	8.91277	9.1
261	GLOBAL	Cartesian	1.31492	8.91273	9.1
262	GLOBAL	Cartesian	2.21492	8.91274	9.1
263	GLOBAL	Cartesian	3.11492	8.91275	9.1
264	GLOBAL	Cartesian	5.31406	6.60809	9.1
265	GLOBAL	Cartesian	6.88536	6.60809	9.1
266	GLOBAL	Cartesian	7.96236	6.60809	9.1
267	GLOBAL	Cartesian	8.73378	6.60809	9.1
268	GLOBAL	Cartesian	9.63378	6.60809	9.1
269	GLOBAL	Cartesian	10.34433	6.60809	9.1
270	GLOBAL	Cartesian	11.42133	6.60809	9.1
271	GLOBAL	Cartesian	12.15009	6.60809	9.1
272	GLOBAL	Cartesian	13.08509	6.60809	9.1
273	GLOBAL	Cartesian	13.98509	6.60809	9.1
274	GLOBAL	Cartesian	14.88509	6.60809	9.1
275	GLOBAL	Cartesian	15.99591	6.60809	9.1
276	GLOBAL	Cartesian	0.37992	9.71272	9.1
277	GLOBAL	Cartesian	4.18644	9.71277	9.1
278	GLOBAL	Cartesian	20.28509	8.80147	9.1
279	GLOBAL	Cartesian	20.28509	11.61555	9.1
280	GLOBAL	Cartesian	19.38509	8.80075	9.1
281	GLOBAL	Cartesian	19.38509	11.62135	9.1

Table 1: Joint Coordinates

Joint	CoordSys	CoordType	GlobalX	GlobalY	GlobalZ
			m	m	m
282	GLOBAL	Cartesian	18.48509	8.80003	9.1
283	GLOBAL	Cartesian	18.48509	11.62715	9.1
284	GLOBAL	Cartesian	17.58509	8.7993	9.1
285	GLOBAL	Cartesian	17.58509	11.63295	9.1
286	GLOBAL	Cartesian	0.37992	11.14739	12.85
287	GLOBAL	Cartesian	4.18644	11.14739	12.85
288	GLOBAL	Cartesian	0.37992	6.67804	12.85
289	GLOBAL	Cartesian	4.18644	6.67814	12.85
290	GLOBAL	Cartesian	5.22433	8.21588	12.85
291	GLOBAL	Cartesian	16.53787	11.6397	12.85
292	GLOBAL	Cartesian	21.09355	11.61034	12.85
293	GLOBAL	Cartesian	21.11374	8.80214	12.85
294	GLOBAL	Cartesian	16.75514	8.79864	12.85
295	GLOBAL	Cartesian	21.11374	5.45304	12.85
296	GLOBAL	Cartesian	20.90009	0.37981	12.85
297	GLOBAL	Cartesian	9.4166	8.21588	12.85
298	GLOBAL	Cartesian	11.96517	8.21588	12.85
299	GLOBAL	Cartesian	5.37992	5.42804	12.85
300	GLOBAL	Cartesian	15.75009	0.37981	12.85
301	GLOBAL	Cartesian	12.15009	0.37981	12.85
302	GLOBAL	Cartesian	9.17992	0.37981	12.85
303	GLOBAL	Cartesian	5.37992	0.37981	12.85
304	GLOBAL	Cartesian	0.37992	0.37981	12.85
305	GLOBAL	Cartesian	0.37992	5.42804	12.85
306	GLOBAL	Cartesian	16.33083	8.21588	12.85
307	GLOBAL	Cartesian	15.75009	5.42804	12.85
308	GLOBAL	Cartesian	12.15009	5.42804	12.85
309	GLOBAL	Cartesian	9.17992	5.42804	12.85
310	GLOBAL	Cartesian	16.95576	8.79864	12.85
311	GLOBAL	Cartesian	16.95576	5.43366	12.85
312	GLOBAL	Cartesian	20.90009	-0.58019	12.85
313	GLOBAL	Cartesian	15.75009	-0.58019	12.85
314	GLOBAL	Cartesian	12.15009	-0.58019	12.85
315	GLOBAL	Cartesian	9.17992	-0.58019	12.85
316	GLOBAL	Cartesian	5.37992	-0.58019	12.85
317	GLOBAL	Cartesian	0.37992	-0.58019	12.85
318	GLOBAL	Cartesian	6.88536	8.21588	4.7
319	GLOBAL	Cartesian	7.96236	8.21588	4.7
320	GLOBAL	Cartesian	10.34433	8.21588	4.7
321	GLOBAL	Cartesian	11.42133	8.21588	4.7
322	GLOBAL	Cartesian	13.08509	5.72804	4.7
323	GLOBAL	Cartesian	13.08509	8.21588	4.7
324	GLOBAL	Cartesian	12.15009	5.43804	4.7
325	GLOBAL	Cartesian	12.15009	8.21588	4.7
326	GLOBAL	Cartesian	13.98509	5.72804	4.7
327	GLOBAL	Cartesian	13.98509	8.21588	4.7
328	GLOBAL	Cartesian	14.88509	5.72804	4.7
329	GLOBAL	Cartesian	14.88509	8.21588	4.7
330	GLOBAL	Cartesian	8.73378	5.72804	4.7
331	GLOBAL	Cartesian	8.73378	8.21588	4.7
332	GLOBAL	Cartesian	9.63378	5.72804	4.7
333	GLOBAL	Cartesian	9.63378	8.21588	4.7
334	GLOBAL	Cartesian	6.88536	8.21588	9.1
335	GLOBAL	Cartesian	7.96236	8.21588	9.1

Table 1: Joint Coordinates

Joint	CoordSys	CoordType	GlobalX	GlobalY	GlobalZ
			m	m	m
336	GLOBAL	Cartesian	10.34433	8.21588	9.1
337	GLOBAL	Cartesian	11.42133	8.21588	9.1
338	GLOBAL	Cartesian	13.08509	5.72804	9.1
339	GLOBAL	Cartesian	13.08509	8.21588	9.1
341	GLOBAL	Cartesian	12.15009	8.21588	9.1
342	GLOBAL	Cartesian	13.98509	5.72804	9.1
343	GLOBAL	Cartesian	13.98509	8.21588	9.1
344	GLOBAL	Cartesian	14.88509	5.72804	9.1
345	GLOBAL	Cartesian	14.88509	8.21588	9.1
346	GLOBAL	Cartesian	8.73378	5.72804	9.1
347	GLOBAL	Cartesian	8.73378	8.21588	9.1
348	GLOBAL	Cartesian	9.63378	5.72804	9.1
349	GLOBAL	Cartesian	9.63378	8.21588	9.1
352	GLOBAL	Cartesian	12.15009	5.72804	9.1
353	GLOBAL	Cartesian	17.58531	6.60813	9.1
354	GLOBAL	Cartesian	18.48509	6.60813	9.1
355	GLOBAL	Cartesian	19.38509	6.60813	9.1
356	GLOBAL	Cartesian	20.28531	6.60813	9.1
357	GLOBAL	Cartesian	21.11391	6.60813	9.1
358	GLOBAL	Cartesian	17.05514	8.79864	9.1
359	GLOBAL	Cartesian	17.05514	6.60809	9.1
360	GLOBAL	Cartesian	17.06078	5.43415	9.1
361	GLOBAL	Cartesian	0.37992	8.11272	9.1
362	GLOBAL	Cartesian	4.18644	8.11277	9.1
367	GLOBAL	Cartesian	16.685	5.42797	9.1
368	GLOBAL	Cartesian	17.585	5.43242	9.1
369	GLOBAL	Cartesian	18.485	5.43648	9.1
370	GLOBAL	Cartesian	19.385	5.44047	9.1
371	GLOBAL	Cartesian	20.285	5.44492	9.1
373	GLOBAL	Cartesian	17.58547	5.44055	9.1
374	GLOBAL	Cartesian	18.48531	5.44508	9.1
375	GLOBAL	Cartesian	19.38547	5.4493	9.1
380	GLOBAL	Cartesian	6.88516	5.72813	9.1
381	GLOBAL	Cartesian	7.96219	5.72813	9.1
382	GLOBAL	Cartesian	10.34422	5.72813	9.1
383	GLOBAL	Cartesian	11.42109	5.72813	9.1
384	GLOBAL	Cartesian	21.11359	7.70516	9.1
385	GLOBAL	Cartesian	20.285	7.70477	9.1
386	GLOBAL	Cartesian	5.36325	5.72671	9.1
387	GLOBAL	Cartesian	15.81219	5.72619	9.1
388	GLOBAL	Cartesian	17.05514	8.21626	9.1
389	GLOBAL	Cartesian	17.05935	5.73218	9.1
390	GLOBAL	Cartesian	16.68484	5.42797	4.7
391	GLOBAL	Cartesian	17.58469	5.43242	4.7
392	GLOBAL	Cartesian	18.48484	5.43648	4.7
393	GLOBAL	Cartesian	19.38484	5.44055	4.7
394	GLOBAL	Cartesian	20.28469	5.44492	4.7
395	GLOBAL	Cartesian	7.96234	5.72805	4.7
396	GLOBAL	Cartesian	10.34438	5.72805	4.7
397	GLOBAL	Cartesian	6.88531	5.72805	4.7
398	GLOBAL	Cartesian	12.15031	5.72805	4.7
399	GLOBAL	Cartesian	11.42141	5.72805	4.7
400	GLOBAL	Cartesian	17.58469	11.62719	4.7
401	GLOBAL	Cartesian	18.48469	11.62133	4.7

Table 1: Joint Coordinates

Joint	CoordSys	CoordType	GlobalX	GlobalY	GlobalZ
			m	m	m
402	GLOBAL	Cartesian	19.38484	11.61555	4.7
403	GLOBAL	Cartesian	19.38509	7.70444	9.1
404	GLOBAL	Cartesian	18.48509	7.70408	9.1
405	GLOBAL	Cartesian	5.36269	5.73677	4.7
406	GLOBAL	Cartesian	17.585	7.70383	9.1
407	GLOBAL	Cartesian	15.81183	5.72446	4.7
408	GLOBAL	Cartesian	16.75514	8.22988	4.7
409	GLOBAL	Cartesian	17.58509	6.16002	4.7
410	GLOBAL	Cartesian	15.93802	6.33023	4.7
411	GLOBAL	Cartesian	4.18644	8.21588	4.7
412	GLOBAL	Cartesian	4.18644	8.21588	9.1
413	GLOBAL	Cartesian	17.05514	7.70336	9.1
417	GLOBAL	Cartesian	0.37992	1.65892	9.1
418	GLOBAL	Cartesian	1.31492	1.65892	9.1
419	GLOBAL	Cartesian	2.21492	1.65892	9.1
420	GLOBAL	Cartesian	3.11492	1.65892	9.1
421	GLOBAL	Cartesian	4.01492	1.65892	9.1
422	GLOBAL	Cartesian	4.91492	1.65892	9.1
423	GLOBAL	Cartesian	5.37992	1.65892	9.1
424	GLOBAL	Cartesian	5.81492	1.65892	9.1
425	GLOBAL	Cartesian	6.71492	1.65892	9.1
426	GLOBAL	Cartesian	7.61492	1.65892	9.1
427	GLOBAL	Cartesian	8.51492	1.65892	9.1
428	GLOBAL	Cartesian	9.17992	1.65892	9.1
429	GLOBAL	Cartesian	10.215	1.65892	9.1
430	GLOBAL	Cartesian	11.115	1.65892	9.1
431	GLOBAL	Cartesian	12.15009	1.65892	9.1
432	GLOBAL	Cartesian	13.08509	1.65892	9.1
433	GLOBAL	Cartesian	13.98509	1.65892	9.1
434	GLOBAL	Cartesian	14.88509	1.65892	9.1
435	GLOBAL	Cartesian	15.75009	1.65892	9.1
436	GLOBAL	Cartesian	16.68509	1.65892	9.1
437	GLOBAL	Cartesian	17.58509	1.65892	9.1
438	GLOBAL	Cartesian	18.48509	1.65892	9.1
439	GLOBAL	Cartesian	19.38509	1.65892	9.1
440	GLOBAL	Cartesian	20.28509	1.65892	9.1
442	GLOBAL	Cartesian	0.37992	4.15892	9.1
443	GLOBAL	Cartesian	1.31492	4.15892	9.1
444	GLOBAL	Cartesian	2.21492	4.15892	9.1
445	GLOBAL	Cartesian	3.11492	4.15892	9.1
446	GLOBAL	Cartesian	4.01492	4.15892	9.1
447	GLOBAL	Cartesian	4.91492	4.15892	9.1
448	GLOBAL	Cartesian	5.37992	4.15892	9.1
449	GLOBAL	Cartesian	5.81492	4.15892	9.1
450	GLOBAL	Cartesian	6.71492	4.15892	9.1
451	GLOBAL	Cartesian	7.61492	4.15892	9.1
452	GLOBAL	Cartesian	8.51492	4.15892	9.1
453	GLOBAL	Cartesian	9.17992	4.15892	9.1
454	GLOBAL	Cartesian	10.215	4.15892	9.1
455	GLOBAL	Cartesian	11.115	4.15892	9.1
456	GLOBAL	Cartesian	12.15009	4.15892	9.1
457	GLOBAL	Cartesian	13.08509	4.15892	9.1
458	GLOBAL	Cartesian	13.98509	4.15892	9.1
459	GLOBAL	Cartesian	14.88509	4.15892	9.1

Table 1: Joint Coordinates

Joint	CoordSys	CoordType	GlobalX	GlobalY	GlobalZ
			m	m	m
460	GLOBAL	Cartesian	15.75009	4.15892	9.1
461	GLOBAL	Cartesian	16.68509	4.15892	9.1
462	GLOBAL	Cartesian	17.58509	4.15892	9.1
463	GLOBAL	Cartesian	18.48509	4.15892	9.1
464	GLOBAL	Cartesian	19.38509	4.15892	9.1
465	GLOBAL	Cartesian	20.28509	4.15892	9.1
471	GLOBAL	Cartesian	1.31492	10.03006	9.1
472	GLOBAL	Cartesian	2.21492	10.03007	9.1
473	GLOBAL	Cartesian	3.11516	10.03008	9.1
474	GLOBAL	Cartesian	4.18656	10.03008	9.1
475	GLOBAL	Cartesian	0.37992	10.03006	9.1
476	GLOBAL	Cartesian	1.31492	7.7954	9.1
477	GLOBAL	Cartesian	2.21492	7.7954	9.1
478	GLOBAL	Cartesian	3.11516	7.79539	9.1
479	GLOBAL	Cartesian	4.18656	7.79539	9.1
480	GLOBAL	Cartesian	0.37992	7.7954	9.1
481	GLOBAL	Cartesian	20.95297	1.63078	9.1
482	GLOBAL	Cartesian	21.05787	4.12637	9.1
483	GLOBAL	Cartesian	19.38509	10.68135	9.1
484	GLOBAL	Cartesian	18.48509	10.68715	9.1
485	GLOBAL	Cartesian	19.38509	9.74135	9.1
486	GLOBAL	Cartesian	18.48509	9.74715	9.1
487	GLOBAL	Cartesian	20.28531	10.68148	9.1
488	GLOBAL	Cartesian	21.10047	10.68742	9.1
489	GLOBAL	Cartesian	20.28531	9.74148	9.1
490	GLOBAL	Cartesian	21.10719	9.7475	9.1
491	GLOBAL	Cartesian	17.58531	10.68734	9.1
492	GLOBAL	Cartesian	16.61672	10.61336	9.1
493	GLOBAL	Cartesian	17.58531	9.74727	9.1
494	GLOBAL	Cartesian	16.68813	9.67867	9.1
495	GLOBAL	Cartesian	8.73422	7.41203	9.1
496	GLOBAL	Cartesian	7.96281	7.41203	9.1
497	GLOBAL	Cartesian	6.88578	7.41211	9.1
498	GLOBAL	Cartesian	6.00594	7.41219	9.1
499	GLOBAL	Cartesian	5.26953	7.41203	9.1
500	GLOBAL	Cartesian	9.63422	7.41219	9.1
501	GLOBAL	Cartesian	10.34469	7.41227	9.1
502	GLOBAL	Cartesian	11.42156	7.41234	9.1
503	GLOBAL	Cartesian	12.15	7.41188	9.1
504	GLOBAL	Cartesian	13.08516	7.41188	9.1
505	GLOBAL	Cartesian	13.985	7.41188	9.1
506	GLOBAL	Cartesian	14.885	7.41188	9.1
508	GLOBAL	Cartesian	16.16333	7.41183	9.1
509	GLOBAL	Cartesian	0.37992	10.04739	4.7
510	GLOBAL	Cartesian	4.18644	10.04739	4.7
511	GLOBAL	Cartesian	1.31492	10.04739	4.7
512	GLOBAL	Cartesian	2.21492	10.04739	4.7
513	GLOBAL	Cartesian	3.11492	10.04739	4.7
514	GLOBAL	Cartesian	0.37992	8.94739	4.7
515	GLOBAL	Cartesian	4.18644	8.94739	4.7
516	GLOBAL	Cartesian	1.31492	8.94739	4.7
517	GLOBAL	Cartesian	2.21492	8.94739	4.7
518	GLOBAL	Cartesian	3.11492	8.94739	4.7
519	GLOBAL	Cartesian	0.37992	7.84739	4.7

Table 1: Joint Coordinates

Joint	CoordSys	CoordType	GlobalX	GlobalY	GlobalZ
			m	m	m
520	GLOBAL	Cartesian	4.18644	7.84739	4.7
521	GLOBAL	Cartesian	1.31492	7.84739	4.7
522	GLOBAL	Cartesian	2.21492	7.84739	4.7
523	GLOBAL	Cartesian	3.11492	7.84739	4.7
524	GLOBAL	Cartesian	1.31492	4.16848	4.7
525	GLOBAL	Cartesian	2.21492	4.16848	4.7
526	GLOBAL	Cartesian	3.11492	4.16848	4.7
527	GLOBAL	Cartesian	4.01492	4.16848	4.7
528	GLOBAL	Cartesian	4.91492	4.16848	4.7
529	GLOBAL	Cartesian	5.37992	4.16848	4.7
530	GLOBAL	Cartesian	5.81492	4.16848	4.7
531	GLOBAL	Cartesian	6.71492	4.16848	4.7
532	GLOBAL	Cartesian	7.61492	4.16848	4.7
533	GLOBAL	Cartesian	8.51492	4.16848	4.7
534	GLOBAL	Cartesian	9.17992	4.16848	4.7
535	GLOBAL	Cartesian	10.215	4.16848	4.7
536	GLOBAL	Cartesian	11.115	4.16848	4.7
537	GLOBAL	Cartesian	12.15031	4.16844	4.7
538	GLOBAL	Cartesian	13.08509	4.16844	4.7
539	GLOBAL	Cartesian	13.98531	4.16852	4.7
540	GLOBAL	Cartesian	14.88531	4.16852	4.7
541	GLOBAL	Cartesian	15.75031	4.16852	4.7
542	GLOBAL	Cartesian	16.68531	4.1707	4.7
543	GLOBAL	Cartesian	17.58531	4.17281	4.7
544	GLOBAL	Cartesian	18.48531	4.17484	4.7
545	GLOBAL	Cartesian	19.38531	4.17492	4.7
546	GLOBAL	Cartesian	20.28531	4.175	4.7
547	GLOBAL	Cartesian	21.05875	4.1425	4.7
548	GLOBAL	Cartesian	0.37992	4.16848	4.7
549	GLOBAL	Cartesian	1.31492	1.64437	4.7
550	GLOBAL	Cartesian	2.21469	1.64438	4.7
551	GLOBAL	Cartesian	3.11492	1.64438	4.7
552	GLOBAL	Cartesian	4.01469	1.64438	4.7
553	GLOBAL	Cartesian	4.91492	1.64437	4.7
554	GLOBAL	Cartesian	5.37992	1.64437	4.7
555	GLOBAL	Cartesian	5.81469	1.64438	4.7
556	GLOBAL	Cartesian	6.71492	1.64437	4.7
557	GLOBAL	Cartesian	7.61469	1.64438	4.7
558	GLOBAL	Cartesian	8.51492	1.64438	4.7
559	GLOBAL	Cartesian	9.17992	1.64438	4.7
560	GLOBAL	Cartesian	10.21484	1.64438	4.7
561	GLOBAL	Cartesian	11.115	1.64437	4.7
562	GLOBAL	Cartesian	12.15009	1.64437	4.7
563	GLOBAL	Cartesian	13.08509	1.64437	4.7
564	GLOBAL	Cartesian	13.98509	1.64437	4.7
565	GLOBAL	Cartesian	14.88509	1.64437	4.7
566	GLOBAL	Cartesian	15.75009	1.64437	4.7
567	GLOBAL	Cartesian	16.68509	1.64437	4.7
568	GLOBAL	Cartesian	17.58509	1.64437	4.7
569	GLOBAL	Cartesian	18.48509	1.64437	4.7
570	GLOBAL	Cartesian	19.38509	1.64437	4.7
571	GLOBAL	Cartesian	20.28509	1.64437	4.7
572	GLOBAL	Cartesian	20.95216	1.61627	4.7
573	GLOBAL	Cartesian	0.37992	1.64437	4.7

Table 1: Joint Coordinates

Joint	CoordSys	CoordType	GlobalX	GlobalY	GlobalZ
			m	m	m
574	GLOBAL	Cartesian	6.00531	7.41188	4.7
575	GLOBAL	Cartesian	6.885	7.41188	4.7
576	GLOBAL	Cartesian	7.96203	7.4118	4.7
577	GLOBAL	Cartesian	8.73344	7.41188	4.7
578	GLOBAL	Cartesian	9.63359	7.4118	4.7
579	GLOBAL	Cartesian	10.34422	7.41188	4.7
580	GLOBAL	Cartesian	11.42094	7.41188	4.7
581	GLOBAL	Cartesian	12.15009	7.41188	4.7
582	GLOBAL	Cartesian	13.08484	7.4118	4.7
583	GLOBAL	Cartesian	13.98509	7.4118	4.7
584	GLOBAL	Cartesian	14.88484	7.41172	4.7
585	GLOBAL	Cartesian	16.16313	7.41188	4.7
586	GLOBAL	Cartesian	5.26891	7.41188	4.7
589	GLOBAL	Cartesian	20.28509	10.67555	4.7
590	GLOBAL	Cartesian	19.38509	10.68135	4.7
591	GLOBAL	Cartesian	18.48509	10.68715	4.7
592	GLOBAL	Cartesian	17.58509	10.69295	4.7
593	GLOBAL	Cartesian	17.58469	10.68719	4.7
594	GLOBAL	Cartesian	18.48469	10.68133	4.7
595	GLOBAL	Cartesian	19.38484	10.67555	4.7
598	GLOBAL	Cartesian	20.28509	9.73555	4.7
599	GLOBAL	Cartesian	19.38509	9.74135	4.7
600	GLOBAL	Cartesian	18.48509	9.74715	4.7
601	GLOBAL	Cartesian	17.58509	9.75295	4.7
602	GLOBAL	Cartesian	17.58469	9.74719	4.7
603	GLOBAL	Cartesian	18.48469	9.74133	4.7
604	GLOBAL	Cartesian	19.38484	9.73555	4.7
605	GLOBAL	Cartesian	16.68171	9.75878	4.7
606	GLOBAL	Cartesian	16.60979	10.69924	4.7
607	GLOBAL	Cartesian	17.58509	6.60809	4.7
608	GLOBAL	Cartesian	18.48509	6.60809	4.7
609	GLOBAL	Cartesian	19.38509	6.60809	4.7
610	GLOBAL	Cartesian	20.28509	6.60809	4.7
611	GLOBAL	Cartesian	21.11374	6.60809	4.7
612	GLOBAL	Cartesian	17.58516	7.70359	4.7
613	GLOBAL	Cartesian	18.48509	7.70406	4.7
614	GLOBAL	Cartesian	19.38509	7.70442	4.7
615	GLOBAL	Cartesian	20.28509	7.70478	4.7
616	GLOBAL	Cartesian	21.11375	7.705	4.7
617	GLOBAL	Cartesian	16.75516	7.70352	4.7
618	GLOBAL	Cartesian	21.1	10.68141	4.7
619	GLOBAL	Cartesian	21.10699	9.74146	4.7

1.2. Joint restraints

Table 2: Joint Restraint Assignments

Table 2: Joint Restraint Assignments

Joint	U1	U2	U3	R1	R2	R3
1	Yes	Yes	Yes	No	No	No

Table 2: Joint Restraint Assignments

Joint	U1	U2	U3	R1	R2	R3
3	Yes	Yes	Yes	No	No	No
5	Yes	Yes	Yes	No	No	No
7	Yes	Yes	Yes	No	No	No
9	Yes	Yes	Yes	No	No	No
11	Yes	Yes	Yes	No	No	No
13	Yes	Yes	Yes	No	No	No
15	Yes	Yes	Yes	No	No	No
17	Yes	Yes	Yes	No	No	No
19	Yes	Yes	Yes	No	No	No
21	Yes	Yes	Yes	No	No	No
23	Yes	Yes	Yes	No	No	No
25	Yes	Yes	Yes	No	No	No
27	Yes	Yes	Yes	No	No	No
29	Yes	Yes	Yes	No	No	No
31	Yes	Yes	Yes	No	No	No
33	Yes	Yes	Yes	No	No	No
35	Yes	Yes	Yes	No	No	No
37	Yes	Yes	Yes	No	No	No
39	Yes	Yes	Yes	No	No	No
41	Yes	Yes	Yes	No	No	No
43	Yes	Yes	Yes	No	No	No
45	Yes	Yes	Yes	Yes	Yes	Yes
47	Yes	Yes	Yes	Yes	Yes	Yes
49	Yes	Yes	Yes	Yes	Yes	Yes

1.3. Element connectivity

Table 3: Connectivity - Frame

Table 3: Connectivity - Frame

Frame	JointI	JointJ	Length
			m
1	1	2	4.7
2	3	4	4.7
3	5	6	4.7
4	7	8	4.7
5	9	10	4.7
6	11	12	4.7
7	13	14	4.7
8	15	16	4.7
9	17	18	4.7
10	19	20	4.7
11	21	22	4.7
12	23	24	4.7
13	25	26	4.7
14	27	28	4.7
15	29	30	4.7
16	31	32	4.7
17	33	34	4.7
18	35	36	4.7
19	37	38	4.7

Table 3: Connectivity - Frame

Frame	JointI	JointJ	Length
			m
20	39	40	4.7
21	41	42	4.7
22	43	44	4.7
23	45	46	4.7
24	47	48	4.7
25	49	50	4.7
37	14	51	1.2501
38	52	53	0.88005
40	55	56	0.935
41	56	57	0.9
42	57	58	0.9
43	58	59	0.9
44	59	60	0.9
45	60	61	0.465
46	61	62	0.435
47	62	63	0.9
48	63	64	0.9
49	64	65	0.9
50	65	66	0.665
51	66	67	1.03508
52	67	68	0.9
53	68	69	1.03508
54	69	70	0.935
55	70	71	0.9
56	71	72	0.9
57	72	73	0.865
58	73	74	0.935
59	74	75	0.9
60	75	76	0.9
61	76	77	0.9
62	77	78	0.9
63	78	79	0.72151
110	8	80	0.935
111	80	81	0.9
112	81	82	0.9
113	82	83	0.9
114	83	84	0.9
115	84	10	0.465
116	10	85	0.435
117	85	86	0.9
118	86	87	0.9
119	87	88	0.9
120	88	28	0.665
121	28	89	1.03508
122	89	90	0.9
123	90	30	1.03508
124	30	91	0.935
125	91	92	0.9
126	92	93	0.9
127	93	32	0.865
128	32	94	0.935
129	94	95	0.9
130	95	96	0.9
131	96	97	0.9

Table 3: Connectivity - Frame

Frame	JointI	JointJ	Length
			m
132	97	98	0.9
133	98	34	0.615
134	6	99	0.935
135	99	118	0.66477
136	118	100	0.23523
137	100	101	0.9
138	101	102	0.9
139	102	51	0.17152
140	51	103	0.72848
141	103	12	0.465
142	12	104	0.435
143	104	105	0.9
144	105	119	0.17044
145	119	106	0.72956
146	106	120	0.34744
147	120	107	0.55256
148	107	26	0.665
149	26	108	1.03508
150	108	121	0.12932
151	121	109	0.77068
152	109	122	0.30632
153	122	24	0.72876
154	24	110	0.935
155	110	111	0.9
156	111	112	0.9
157	112	42	0.865
158	42	113	0.93501
159	113	114	0.90001
160	114	115	0.90001
161	115	116	0.90001
162	116	117	0.90001
163	117	36	0.82866
164	2	123	0.935
165	123	124	0.9
166	124	125	0.9
167	125	18	1.07152
170	4	127	0.935
171	127	128	0.66477
172	128	129	0.23523
173	129	130	0.9
174	130	14	1.07152
183	135	53	0.69154
184	53	136	0.87976
185	136	137	1.077
186	137	138	0.77141
187	138	139	0.9
188	139	140	0.71055
189	140	141	1.077
190	141	142	0.72876
191	142	143	0.935
192	143	144	0.9
193	144	145	0.9
194	145	146	1.11082
195	146	147	0.75923

Table 3: Connectivity - Frame

Frame	JointI	JointJ	Length
			m
196	48	147	2.19054
197	147	46	0.44808
208	2	156	4.4
209	4	157	4.4
210	18	158	4.4
211	14	159	4.4
212	16	160	4.4
213	6	161	4.4
214	12	162	4.4
215	8	163	4.4
216	10	164	4.4
217	28	165	4.4
218	30	166	4.4
219	32	167	4.4
220	34	168	4.4
221	36	169	4.4
222	38	170	4.4
223	40	171	4.4
224	50	172	4.4
225	48	173	4.4
226	44	174	4.4
227	22	175	4.4
228	20	176	4.4
229	26	177	4.4
230	24	178	4.4
231	42	179	4.4
233	276	255	0.8
234	255	361	0.8
240	412	260	0.69688
241	260	277	0.8
243	159	180	1.2501
244	181	182	0.88005
246	184	185	0.935
247	185	186	0.9
248	186	187	0.9
249	187	188	0.9
250	188	189	0.9
251	189	190	0.465
252	190	191	0.435
253	191	192	0.9
254	192	193	0.9
255	193	194	0.9
256	194	195	0.665
257	195	196	1.03508
258	197	198	1.03508
259	198	199	0.935
260	199	200	0.9
261	200	201	0.9
262	201	202	0.865
263	202	203	0.935
264	203	204	0.9
265	204	205	0.9
266	205	206	0.9
267	206	207	0.9

Table 3: Connectivity - Frame

Frame	JointI	JointJ	Length
			m
268	207	208	0.72151
269	209	185	2.52912
270	210	186	2.52912
271	211	187	2.52912
272	212	188	2.52912
273	213	189	2.52912
274	164	190	2.52912
275	214	191	2.52912
276	215	192	2.52912
277	216	193	2.52912
278	217	194	2.52912
279	165	195	2.52912
280	218	196	2.52912
281	219	197	2.52912
282	166	198	2.52912
283	220	199	2.52912
284	221	200	2.52912
285	222	201	2.52912
286	167	202	2.52912
287	223	203	2.52912
288	224	204	2.52912
289	225	205	2.52912
290	226	206	2.52912
291	227	207	2.52912
292	185	228	2.51912
293	186	229	2.51912
294	187	230	2.51912
295	188	231	2.51912
296	189	232	2.51912
297	190	162	2.51912
298	191	233	2.51912
299	192	234	2.51912
300	193	235	2.51912
301	194	236	2.51912
302	195	177	2.51912
303	196	237	2.51912
304	197	238	2.51912
305	198	178	2.51912
306	199	239	2.51912
307	200	240	2.51912
308	201	241	2.51912
309	202	179	2.51912
310	203	242	2.52348
311	204	243	2.52767
312	205	244	2.53162
313	206	245	2.53606
314	207	246	2.54026
315	163	209	0.935
316	209	210	0.9
317	210	211	0.9
318	211	212	0.9
319	212	213	0.9
320	213	164	0.465
321	164	214	0.435

Table 3: Connectivity - Frame

Frame	JointI	JointJ	Length
			m
322	214	215	0.9
323	215	216	0.9
324	216	217	0.9
325	217	165	0.665
326	165	218	1.03508
327	218	219	0.9
328	219	166	1.03508
329	166	220	0.935
330	220	221	0.9
331	221	222	0.9
332	222	167	0.865
333	167	223	0.935
334	223	224	0.9
335	224	225	0.9
336	225	226	0.9
337	226	227	0.9
338	227	168	0.615
339	161	228	0.935
340	228	247	0.66477
341	247	229	0.23523
342	229	230	0.9
343	230	231	0.9
344	231	180	0.17152
345	180	232	0.72848
346	232	162	0.465
347	162	233	0.435
348	233	234	0.9
349	234	248	0.17044
350	248	235	0.72956
351	235	249	0.34744
352	249	236	0.55256
353	236	177	0.665
354	177	237	1.03508
355	237	250	0.12932
356	250	238	0.77068
357	238	251	0.30632
358	251	178	0.72876
359	178	239	0.935
360	239	240	0.9
361	240	241	0.9
362	241	179	0.865
363	179	242	0.93501
364	242	243	0.90001
365	243	244	0.90001
366	244	245	0.90001
367	245	246	0.90001
368	246	169	0.82866
369	156	252	0.935
370	252	253	0.9
371	253	254	0.9
372	254	158	1.07152
375	157	256	0.935
376	256	257	0.66477
377	257	258	0.23523

Table 3: Connectivity - Frame

Frame	JointI	JointJ	Length
			m
378	258	259	0.9
379	259	159	1.07152
388	264	182	0.69154
389	182	265	0.87976
390	265	266	1.077
391	266	267	0.77141
392	267	268	0.9
393	268	269	0.71055
394	269	270	1.077
395	270	271	0.72876
396	271	272	0.935
397	272	273	0.9
398	273	274	0.9
399	274	275	1.11082
400	358	359	2.19054
412	156	286	3.75
413	158	287	3.75
414	157	288	3.75
415	159	289	3.75
416	160	290	3.75
417	172	291	3.75
418	171	292	3.75
419	170	293	3.75
420	173	294	3.75
421	169	295	3.75
422	168	296	3.75
423	176	297	3.75
424	175	298	3.75
425	162	299	3.75
426	167	300	3.75
427	166	301	3.75
428	165	302	3.75
429	164	303	3.75
430	163	304	3.75
431	161	305	3.75
432	174	306	3.75
433	197	196	0.9
434	179	307	3.75
435	178	308	3.75
436	177	309	3.75
437	292	293	2.80828
438	293	295	3.3491
439	295	296	5.07773
440	296	300	5.15
441	300	301	3.6
442	301	302	2.97016
443	302	303	3.8
444	303	304	5.
445	304	305	5.04824
446	305	299	5.
447	299	309	3.8
448	309	308	2.97016
449	308	307	3.6
450	292	291	4.55578

Table 3: Connectivity - Frame

Frame	JointI	JointJ	Length
			m
451	291	294	2.84936
452	310	311	3.36497
454	306	307	2.84769
455	306	298	4.36566
456	298	297	2.54857
457	297	290	4.19227
458	288	286	4.46935
459	286	287	3.80652
460	287	289	4.46925
461	289	288	3.80652
462	299	290	2.79218
463	296	312	0.96
464	300	313	0.96
465	301	314	0.96
466	302	315	0.96
467	303	316	0.96
468	304	317	0.96
469	317	316	5.
470	316	315	3.8
471	315	314	2.97016
472	314	313	3.6
473	313	312	5.15
475	417	418	0.935
476	418	419	0.9
477	419	420	0.9
478	118	128	1.25004
479	420	421	0.9
480	421	422	0.9
481	422	423	0.465
482	423	424	0.435
483	424	425	0.9
484	425	426	0.9
489	426	427	0.9
490	427	428	0.665
491	428	429	1.03508
492	430	431	1.03508
493	247	257	1.25004
494	431	432	0.935
495	432	433	0.9
496	433	434	0.9
497	434	435	0.865
498	435	436	0.935
499	436	437	0.9
500	384	385	0.82859
501	385	403	0.89991
502	403	404	0.9
503	404	406	0.90009
504	437	438	0.9
507	16	54	0.78128
508	54	318	0.87976
509	318	319	1.077
510	319	331	0.77141
511	331	20	0.68282
512	20	333	0.21718

Table 3: Connectivity - Frame

Frame	JointI	JointJ	Length
			m
513	333	320	0.71055
514	320	321	1.077
515	321	22	0.54384
516	22	325	0.18492
517	325	323	0.935
518	323	327	0.9
519	327	329	0.9
520	329	44	1.44574
521	40	149	0.80848
522	149	151	0.90002
523	151	153	0.90002
524	153	155	0.90002
525	155	50	1.04724
526	38	148	0.82866
527	148	150	0.9
528	150	152	0.9
529	152	154	0.9
530	154	48	0.82995
531	12	135	1.18189
533	42	146	1.20538
535	161	184	2.51912
536	184	163	2.52912
537	160	183	0.78128
538	183	334	0.87976
539	334	335	1.077
540	335	347	0.77141
541	347	176	0.68282
542	176	349	0.21718
543	349	336	0.71055
544	336	337	1.077
545	337	175	0.54384
546	175	341	0.18492
547	341	339	0.935
548	339	343	0.9
549	343	345	0.9
550	345	174	1.44574
551	171	279	0.80848
552	279	281	0.90002
553	281	283	0.90002
554	283	285	0.90002
555	285	172	1.04724
556	170	278	0.82866
557	278	280	0.9
558	280	282	0.9
559	282	284	0.9
560	438	439	0.9
561	162	264	1.18189
562	264	160	1.61029
563	179	275	1.20538
565	293	310	4.15799
566	310	294	0.20062
567	119	136	1.18005
569	120	137	1.18005
571	121	140	1.18005

Table 3: Connectivity - Frame

Frame	JointI	JointJ	Length
			m
573	122	141	1.18005
575	322	143	0.88005
577	324	142	1.17005
579	326	144	0.88005
581	328	145	0.88005
583	330	138	0.88005
585	332	139	0.88005
587	248	265	1.18005
589	249	266	1.18005
591	250	269	1.18005
593	251	270	1.18005
595	338	272	0.88005
597	439	440	0.9
599	342	273	0.88005
601	344	274	0.88005
603	346	267	0.88005
605	348	268	0.88005
607	307	311	1.20568
608	311	295	4.15803
610	352	271	0.88005
611	430	429	0.9
612	442	443	0.935
613	353	354	0.89977
614	354	355	0.9
615	355	356	0.90023
616	356	357	0.82859
617	169	357	1.15508
618	357	170	2.19401
619	246	356	1.15894
620	356	278	2.19335
621	245	355	1.16314
622	355	280	2.19262
623	244	354	1.16758
624	354	282	2.1919
625	243	353	1.17153
626	353	284	2.19118
627	353	359	0.53017
628	359	275	1.05923
629	359	360	1.17395
630	284	358	0.52995
631	358	173	0.3
632	443	444	0.9
633	444	445	0.9
634	445	446	0.9
635	446	447	0.9
636	447	448	0.465
637	448	449	0.435
638	449	450	0.9
639	450	451	0.9
640	451	452	0.9
641	452	453	0.665
642	453	454	1.03508
643	455	456	1.03508
644	456	457	0.935

Table 3: Connectivity - Frame

Frame	JointI	JointJ	Length
			m
645	457	458	0.9
646	458	459	0.9
647	459	460	0.865
648	460	461	0.935
649	461	462	0.9
650	462	463	0.9
651	463	464	0.9
652	464	465	0.9
654	455	454	0.9
655	406	413	0.52986
662	362	412	0.10312
663	255	261	0.935
664	261	262	0.9
665	262	263	0.9
666	263	260	1.07152
673	471	472	0.9
674	472	473	0.90023
675	473	474	1.07141
676	471	475	0.935
677	476	477	0.9
678	477	478	0.90023
679	478	479	1.07141
680	476	480	0.935
681	156	475	1.11733
682	475	276	0.31734
683	361	480	0.31732
684	480	157	1.11736
685	159	479	1.11725
686	479	362	0.31738
687	277	474	0.31731
688	474	158	1.11731
689	252	471	1.11733
690	471	261	1.11733
691	261	476	1.11733
692	476	256	1.11733
693	253	472	1.11732
694	472	262	1.11732
695	262	477	1.11734
696	477	258	1.11731
697	254	473	1.11731
698	473	263	1.11733
699	263	478	1.11736
700	478	259	1.11728
701	440	481	0.66848
702	465	482	0.77347
703	168	481	1.25209
704	481	208	1.27927
705	208	482	1.21853
706	482	169	1.32785
709	483	487	0.90023
710	487	488	0.81518
711	485	489	0.90023
712	489	490	0.8219
713	484	491	0.89977

Table 3: Connectivity - Frame

Frame	JointI	JointJ	Length
			m
714	491	492	0.97142
715	486	493	0.89977
716	493	494	0.89981
717	484	483	0.90002
718	486	485	0.90002
719	173	494	0.88258
720	494	492	0.93741
721	492	172	1.02937
722	170	490	0.94538
723	490	488	0.93995
724	488	171	0.92295
725	278	489	0.94001
726	489	487	0.94
727	487	279	0.93407
728	280	485	0.9406
729	485	483	0.94
730	483	281	0.94
731	282	486	0.94713
732	486	484	0.94
733	484	283	0.94
734	284	493	0.94796
735	493	491	0.94008
736	491	285	0.94561
737	495	496	0.77141
738	496	497	1.07703
739	497	498	0.87984
740	498	499	0.73641
741	495	500	0.9
742	500	501	0.71047
743	501	502	1.07688
744	502	503	0.72844
745	503	504	0.93516
746	504	505	0.89984
747	505	506	0.9
749	182	498	0.80409
750	498	183	0.8037
751	275	508	0.82099
752	508	174	0.82132
753	265	497	0.80402
754	497	334	0.80377
755	266	496	0.80394
756	496	335	0.80385
757	269	501	0.80417
758	501	336	0.80362
759	270	502	0.80425
760	502	337	0.80354
761	272	504	0.80378
762	504	339	0.80401
763	271	503	0.80378
764	503	341	0.80401
765	273	505	0.80378
766	505	343	0.80401
767	274	506	0.80378
768	506	345	0.80401

Table 3: Connectivity - Frame

Frame	JointI	JointJ	Length
			m
769	267	495	0.80394
770	495	347	0.80385
771	268	500	0.80409
772	500	349	0.8037
773	506	508	1.27833
775	509	511	0.935
776	511	512	0.9
777	512	513	0.9
778	513	510	1.07152
779	514	516	0.935
780	516	517	0.9
781	517	518	0.9
782	518	515	1.07152
783	519	521	0.935
784	521	522	0.9
785	522	523	0.9
786	523	520	1.07152
787	2	509	1.1
788	509	514	1.1
789	514	126	0.03467
790	126	519	1.06533
791	519	4	1.16935
792	14	520	1.16925
793	520	411	0.36849
794	411	131	0.69688
795	131	515	0.03462
796	515	510	1.1
797	510	18	1.1
798	123	511	1.1
799	511	516	1.1
800	516	132	0.03466
801	132	521	1.06534
802	521	127	1.16932
803	124	512	1.1
804	512	517	1.1
805	517	133	0.03465
806	133	522	1.06535
807	522	129	1.1693
808	125	513	1.1
809	513	518	1.1
810	518	134	0.03464
811	134	523	1.06536
812	523	130	1.16927
813	524	525	0.9
814	525	526	0.9
815	526	527	0.9
816	527	528	0.9
817	528	529	0.465
818	529	530	0.435
819	530	531	0.9
820	531	532	0.9
821	532	533	0.9
822	533	534	0.665
823	534	535	1.03508

Table 3: Connectivity - Frame

Frame	JointI	JointJ	Length
			m
824	535	536	0.9
825	536	537	1.03531
826	537	538	0.93477
827	538	539	0.90023
828	539	540	0.9
829	540	541	0.865
830	541	542	0.935
831	542	543	0.9
832	543	544	0.9
833	544	545	0.9
834	545	546	0.9
835	546	547	0.77412
836	524	548	0.935
837	549	550	0.89977
838	550	551	0.90023
839	551	552	0.89977
840	552	553	0.90023
841	553	554	0.465
842	554	555	0.43477
843	555	556	0.90023
844	556	557	0.89977
845	557	558	0.90023
846	558	559	0.665
847	559	560	1.03492
848	560	561	0.90016
849	561	562	1.03508
850	562	563	0.935
851	563	564	0.9
852	564	565	0.9
853	565	566	0.865
854	566	567	0.935
855	567	568	0.9
856	568	569	0.9
857	569	570	0.9
858	570	571	0.9
859	571	572	0.66766
860	549	573	0.935
861	80	549	1.26456
862	549	56	1.26456
863	81	550	1.26457
864	550	57	1.26455
865	82	551	1.26457
866	551	58	1.26455
867	83	552	1.26457
868	552	59	1.26455
869	84	553	1.26456
870	553	60	1.26456
871	10	554	1.26456
872	554	61	1.26456
873	85	555	1.26457
874	555	62	1.26455
875	86	556	1.26456
876	556	63	1.26456
877	87	557	1.26457

Table 3: Connectivity - Frame

Frame	JointI	JointJ	Length
			m
878	557	64	1.26455
879	88	558	1.26457
880	558	65	1.26455
881	28	559	1.26457
882	559	66	1.26455
883	89	560	1.26457
884	560	67	1.26455
885	90	561	1.26457
886	561	68	1.26455
887	30	562	1.26456
888	562	69	1.26456
889	91	563	1.26456
890	563	70	1.26456
891	92	564	1.26456
892	564	71	1.26456
893	93	565	1.26456
894	565	72	1.26456
895	32	566	1.26456
896	566	73	1.26456
897	94	567	1.26456
898	567	74	1.26456
899	95	568	1.26456
900	568	75	1.26456
901	96	569	1.26456
902	569	76	1.26456
903	97	570	1.26456
904	570	77	1.26456
905	98	571	1.26456
906	571	78	1.26456
907	56	524	1.25956
908	524	99	1.25956
909	57	525	1.25956
910	525	100	1.25956
911	58	526	1.25956
912	526	101	1.25956
913	59	527	1.25956
914	527	102	1.25956
915	60	528	1.25956
916	528	103	1.25956
917	61	529	1.25956
918	529	12	1.25956
919	62	530	1.25956
920	530	104	1.25956
921	63	531	1.25956
922	531	105	1.25956
923	64	532	1.25956
924	532	106	1.25956
925	65	533	1.25956
926	533	107	1.25956
927	66	534	1.25956
928	534	26	1.25956
929	67	535	1.25956
930	535	108	1.25956
931	68	536	1.25956

Table 3: Connectivity - Frame

Frame	JointI	JointJ	Length
			m
932	536	109	1.25956
933	69	537	1.25951
934	537	24	1.25961
935	70	538	1.25951
936	538	110	1.25961
937	71	539	1.25959
938	539	111	1.25953
939	72	540	1.25959
940	540	112	1.25953
941	73	541	1.25959
942	541	42	1.25953
943	74	542	1.26178
944	542	113	1.2617
945	75	543	1.26389
946	543	114	1.26378
947	76	544	1.26592
948	544	115	1.2657
949	77	545	1.266
950	545	116	1.27006
951	78	546	1.26608
952	546	117	1.27418
953	34	572	1.23756
954	572	79	1.2938
955	79	547	1.23468
956	547	36	1.3117
957	6	548	1.25956
958	548	55	1.25956
959	55	573	1.26456
960	573	8	1.26456
961	574	575	0.87969
962	575	576	1.07703
963	576	577	0.77141
964	577	578	0.90016
965	578	579	0.71063
966	579	580	1.07672
967	580	581	0.72915
968	581	582	0.93476
969	582	583	0.90024
970	583	584	0.89976
971	584	585	1.27828
972	574	586	0.73641
973	53	574	0.80378
974	574	54	0.80401
975	135	586	0.80505
976	586	16	0.80524
977	146	585	0.82099
978	585	44	0.82131
979	136	575	0.80378
980	575	318	0.80401
981	137	576	0.8037
982	576	319	0.80409
983	140	579	0.80378
984	579	320	0.80401
985	141	580	0.80378

Table 3: Connectivity - Frame

Frame	JointI	JointJ	Length
			m
986	580	321	0.80401
987	143	582	0.8037
988	582	323	0.80409
989	142	581	0.80378
990	581	325	0.80401
991	144	583	0.8037
992	583	327	0.80409
993	145	584	0.80363
994	584	329	0.80417
995	138	577	0.80378
996	577	331	0.80401
997	139	578	0.8037
998	578	333	0.80409
1000	589	590	0.90002
1001	590	591	0.90002
1002	591	592	0.90002
1005	598	599	0.90002
1006	599	600	0.90002
1007	600	601	0.90002
1009	48	605	0.96294
1010	605	606	0.94321
1011	606	50	0.94321
1012	148	598	0.93408
1013	598	589	0.94
1014	589	149	0.94
1015	150	604	0.9348
1016	604	599	0.00581
1017	599	595	0.93419
1018	595	590	0.00581
1020	152	603	0.9413
1021	603	600	0.00584
1022	600	594	0.93417
1023	594	591	0.00584
1025	154	602	0.94788
1026	602	601	0.00578
1027	601	593	0.93423
1028	593	592	0.00578
1030	592	606	0.97532
1032	601	605	0.90339
1034	590	402	0.93419
1035	402	151	0.00581
1036	591	401	0.93417
1037	401	153	0.00584
1038	592	400	0.93423
1039	400	155	0.00578
1040	147	607	0.82995
1041	607	608	0.9
1042	608	609	0.9
1043	609	610	0.9
1044	610	611	0.82866
1045	36	611	1.15505
1047	117	610	1.15891
1049	116	609	1.16311
1051	115	608	1.16755

Table 3: Connectivity - Frame

Frame	JointI	JointJ	Length
			m
1055	612	613	0.89993
1056	613	614	0.9
1057	614	615	0.9
1058	615	616	0.82866
1059	612	617	0.83
1060	611	616	1.09691
1061	616	38	1.09714
1062	610	615	1.09669
1063	615	148	1.09669
1064	609	614	1.09633
1065	614	150	1.09633
1066	608	613	1.09597
1067	613	152	1.09597
1068	114	409	0.72342
1069	409	607	0.44808
1070	607	612	1.0955
1071	612	154	1.09571
1072	589	618	0.81493
1073	598	619	0.82192
1074	38	619	0.93935
1075	619	618	0.93997
1076	618	40	0.92896

Table 4: Frame Section Assignments

Table 4: Frame Section Assignments

Frame	AnalSect	DesignSect	MatProp
1	W12x106	W12x106	Default
2	W12x106	W12x106	Default
3	W12x106	W12x106	Default
4	W12x106	W12x106	Default
5	W12x106	W12x106	Default
6	W12x106	W12x106	Default
7	W12x106	W12x106	Default
8	W12x106	W12x106	Default
9	W12x106	W12x106	Default
10	W12x106	W12x106	Default
11	W12x106	W12x106	Default
12	W12x106	W12x106	Default
13	W12x106	W12x106	Default
14	W12x106	W12x106	Default
15	W12x106	W12x106	Default
16	W12x106	W12x106	Default
17	W12x106	W12x106	Default
18	W12x106	W12x106	Default
19	W12x106	W12x106	Default
20	W12x106	W12x106	Default
21	W12x106	W12x106	Default
22	W12x106	W12x106	Default
23	COLUMNA D-0.50	N.A.	Default
24	COLUMNA D-0.50	N.A.	Default

Table 4: Frame Section Assignments

Frame	AnalSect	DesignSect	MatProp
25	COLUMNA D-0.40	N.A.	Default
37	IPE360	IPE360	Default
38	IPE240	IPE240	Default
40	IPE240	IPE240	Default
41	IPE240	IPE240	Default
42	IPE240	IPE240	Default
43	IPE240	IPE240	Default
44	IPE240	IPE240	Default
45	IPE240	IPE240	Default
46	IPE240	IPE240	Default
47	IPE240	IPE240	Default
48	IPE240	IPE240	Default
49	IPE240	IPE240	Default
50	IPE240	IPE240	Default
51	IPE240	IPE240	Default
52	IPE240	IPE240	Default
53	IPE240	IPE240	Default
54	IPE240	IPE240	Default
55	IPE240	IPE240	Default
56	IPE240	IPE240	Default
57	IPE240	IPE240	Default
58	IPE240	IPE240	Default
59	IPE240	IPE240	Default
60	IPE240	IPE240	Default
61	IPE240	IPE240	Default
62	IPE240	IPE240	Default
63	IPE240	IPE240	Default
110	IPE360	IPE360	Default
111	IPE360	IPE360	Default
112	IPE360	IPE360	Default
113	IPE360	IPE360	Default
114	IPE360	IPE360	Default
115	IPE360	IPE360	Default
116	IPE360	IPE360	Default
117	IPE360	IPE360	Default
118	IPE360	IPE360	Default
119	IPE360	IPE360	Default
120	IPE360	IPE360	Default
121	IPE360	IPE360	Default
122	IPE360	IPE360	Default
123	IPE360	IPE360	Default
124	IPE360	IPE360	Default
125	IPE360	IPE360	Default
126	IPE360	IPE360	Default
127	IPE360	IPE360	Default
128	IPE360	IPE360	Default
129	IPE360	IPE360	Default
130	IPE360	IPE360	Default
131	IPE360	IPE360	Default
132	IPE360	IPE360	Default
133	IPE360	IPE360	Default
134	IPE360	IPE360	Default
135	IPE360	IPE360	Default
136	IPE360	IPE360	Default

Table 4: Frame Section Assignments

Frame	AnalSect	DesignSect	MatProp
137	IPE360	IPE360	Default
138	IPE360	IPE360	Default
139	IPE360	IPE360	Default
140	IPE360	IPE360	Default
141	IPE360	IPE360	Default
142	IPE360	IPE360	Default
143	IPE360	IPE360	Default
144	IPE360	IPE360	Default
145	IPE360	IPE360	Default
146	IPE360	IPE360	Default
147	IPE360	IPE360	Default
148	IPE360	IPE360	Default
149	IPE360	IPE360	Default
150	IPE360	IPE360	Default
151	IPE360	IPE360	Default
152	IPE360	IPE360	Default
153	IPE360	IPE360	Default
154	IPE360	IPE360	Default
155	IPE360	IPE360	Default
156	IPE360	IPE360	Default
157	IPE360	IPE360	Default
158	IPE360	IPE360	Default
159	IPE360	IPE360	Default
160	IPE360	IPE360	Default
161	IPE360	IPE360	Default
162	IPE360	IPE360	Default
163	IPE360	IPE360	Default
164	IPE360	IPE360	Default
165	IPE360	IPE360	Default
166	IPE360	IPE360	Default
167	IPE360	IPE360	Default
170	IPE360	IPE360	Default
171	IPE360	IPE360	Default
172	IPE360	IPE360	Default
173	IPE360	IPE360	Default
174	IPE360	IPE360	Default
183	IPE300	IPE300	Default
184	IPE300	IPE300	Default
185	IPE300	IPE300	Default
186	IPE300	IPE300	Default
187	IPE300	IPE300	Default
188	IPE300	IPE300	Default
189	IPE300	IPE300	Default
190	IPE300	IPE300	Default
191	IPE300	IPE300	Default
192	IPE300	IPE300	Default
193	IPE300	IPE300	Default
194	IPE300	IPE300	Default
195	IPE300	IPE300	Default
196	VIGA (0.50X1.20)	N.A.	Default
197	VIGA (0.50X1.20)	N.A.	Default
208	W12x106	W12x106	Default
209	W12x106	W12x106	Default
210	W12x106	W12x106	Default

Table 4: Frame Section Assignments

Frame	AnalSect	DesignSect	MatProp
211	W12x106	W12x106	Default
212	W12x106	W12x106	Default
213	W12x106	W12x106	Default
214	W12x106	W12x106	Default
215	W12x106	W12x106	Default
216	W12x106	W12x106	Default
217	W12x106	W12x106	Default
218	W12x106	W12x106	Default
219	W12x106	W12x106	Default
220	W12x106	W12x106	Default
221	W12x106	W12x106	Default
222	W12x106	W12x106	Default
223	W12x106	W12x106	Default
224	W12x106	W12x106	Default
225	W12x106	W12x106	Default
226	W12x106	W12x106	Default
227	W12x106	W12x106	Default
228	W12x106	W12x106	Default
229	W12x106	W12x106	Default
230	W12x106	W12x106	Default
231	W12x106	W12x106	Default
233	IPE360	IPE360	Default
234	IPE360	IPE360	Default
240	IPE360	IPE360	Default
241	IPE360	IPE360	Default
243	IPE360	IPE360	Default
244	IPE240	IPE240	Default
246	IPE240	IPE240	Default
247	IPE240	IPE240	Default
248	IPE240	IPE240	Default
249	IPE240	IPE240	Default
250	IPE240	IPE240	Default
251	IPE240	IPE240	Default
252	IPE240	IPE240	Default
253	IPE240	IPE240	Default
254	IPE240	IPE240	Default
255	IPE240	IPE240	Default
256	IPE240	IPE240	Default
257	IPE240	IPE240	Default
258	IPE240	IPE240	Default
259	IPE240	IPE240	Default
260	IPE240	IPE240	Default
261	IPE240	IPE240	Default
262	IPE240	IPE240	Default
263	IPE240	IPE240	Default
264	IPE240	IPE240	Default
265	IPE240	IPE240	Default
266	IPE240	IPE240	Default
267	IPE240	IPE240	Default
268	IPE240	IPE240	Default
269	IPE240	IPE240	Default
270	IPE240	IPE240	Default
271	IPE240	IPE240	Default
272	IPE240	IPE240	Default

Table 4: Frame Section Assignments

Frame	AnalSect	DesignSect	MatProp
273	IPE240	IPE240	Default
274	IPE360	IPE360	Default
275	IPE240	IPE240	Default
276	IPE240	IPE240	Default
277	IPE240	IPE240	Default
278	IPE240	IPE240	Default
279	IPE360	IPE360	Default
280	IPE240	IPE240	Default
281	IPE240	IPE240	Default
282	IPE360	IPE360	Default
283	IPE240	IPE240	Default
284	IPE240	IPE240	Default
285	IPE240	IPE240	Default
286	IPE360	IPE360	Default
287	IPE240	IPE240	Default
288	IPE240	IPE240	Default
289	IPE240	IPE240	Default
290	IPE240	IPE240	Default
291	IPE240	IPE240	Default
292	IPE240	IPE240	Default
293	IPE240	IPE240	Default
294	IPE240	IPE240	Default
295	IPE240	IPE240	Default
296	IPE240	IPE240	Default
297	IPE360	IPE360	Default
298	IPE240	IPE240	Default
299	IPE240	IPE240	Default
300	IPE240	IPE240	Default
301	IPE240	IPE240	Default
302	IPE360	IPE360	Default
303	IPE240	IPE240	Default
304	IPE240	IPE240	Default
305	IPE360	IPE360	Default
306	IPE240	IPE240	Default
307	IPE240	IPE240	Default
308	IPE240	IPE240	Default
309	IPE360	IPE360	Default
310	IPE240	IPE240	Default
311	IPE240	IPE240	Default
312	IPE240	IPE240	Default
313	IPE240	IPE240	Default
314	IPE240	IPE240	Default
315	IPE360	IPE360	Default
316	IPE360	IPE360	Default
317	IPE360	IPE360	Default
318	IPE360	IPE360	Default
319	IPE360	IPE360	Default
320	IPE360	IPE360	Default
321	IPE360	IPE360	Default
322	IPE360	IPE360	Default
323	IPE360	IPE360	Default
324	IPE360	IPE360	Default
325	IPE360	IPE360	Default
326	IPE360	IPE360	Default

Table 4: Frame Section Assignments

Frame	AnalSect	DesignSect	MatProp
327	IPE360	IPE360	Default
328	IPE360	IPE360	Default
329	IPE360	IPE360	Default
330	IPE360	IPE360	Default
331	IPE360	IPE360	Default
332	IPE360	IPE360	Default
333	IPE360	IPE360	Default
334	IPE360	IPE360	Default
335	IPE360	IPE360	Default
336	IPE360	IPE360	Default
337	IPE360	IPE360	Default
338	IPE360	IPE360	Default
339	IPE360	IPE360	Default
340	IPE360	IPE360	Default
341	IPE360	IPE360	Default
342	IPE360	IPE360	Default
343	IPE360	IPE360	Default
344	IPE360	IPE360	Default
345	IPE360	IPE360	Default
346	IPE360	IPE360	Default
347	IPE360	IPE360	Default
348	IPE360	IPE360	Default
349	IPE360	IPE360	Default
350	IPE360	IPE360	Default
351	IPE360	IPE360	Default
352	IPE360	IPE360	Default
353	IPE360	IPE360	Default
354	IPE360	IPE360	Default
355	IPE360	IPE360	Default
356	IPE360	IPE360	Default
357	IPE360	IPE360	Default
358	IPE360	IPE360	Default
359	IPE360	IPE360	Default
360	IPE360	IPE360	Default
361	IPE360	IPE360	Default
362	IPE360	IPE360	Default
363	IPE360	IPE360	Default
364	IPE360	IPE360	Default
365	IPE360	IPE360	Default
366	IPE360	IPE360	Default
367	IPE360	IPE360	Default
368	IPE360	IPE360	Default
369	IPE360	IPE360	Default
370	IPE360	IPE360	Default
371	IPE360	IPE360	Default
372	IPE360	IPE360	Default
375	IPE360	IPE360	Default
376	IPE360	IPE360	Default
377	IPE360	IPE360	Default
378	IPE360	IPE360	Default
379	IPE360	IPE360	Default
388	IPE300	IPE300	Default
389	IPE300	IPE300	Default
390	IPE300	IPE300	Default

Table 4: Frame Section Assignments

Frame	AnalSect	DesignSect	MatProp
391	IPE300	IPE300	Default
392	IPE300	IPE300	Default
393	IPE300	IPE300	Default
394	IPE300	IPE300	Default
395	IPE300	IPE300	Default
396	IPE300	IPE300	Default
397	IPE300	IPE300	Default
398	IPE300	IPE300	Default
399	IPE300	IPE300	Default
400	IPE360	IPE360	Default
412	W12x106	W12x106	Default
413	W12x106	W12x106	Default
414	W12x106	W12x106	Default
415	W12x106	W12x106	Default
416	W12x106	W12x106	Default
417	W12x106	W12x106	Default
418	W12x106	W12x106	Default
419	W12x106	W12x106	Default
420	W12x106	W12x106	Default
421	W12x106	W12x106	Default
422	W12x106	W12x106	Default
423	W12x106	W12x106	Default
424	W12x106	W12x106	Default
425	W12x106	W12x106	Default
426	W12x106	W12x106	Default
427	W12x106	W12x106	Default
428	W12x106	W12x106	Default
429	W12x106	W12x106	Default
430	W12x106	W12x106	Default
431	W12x106	W12x106	Default
432	W12x106	W12x106	Default
433	IPE240	IPE240	Default
434	W12x106	W12x106	Default
435	W12x106	W12x106	Default
436	W12x106	W12x106	Default
437	IPE360	IPE360	Default
438	IPE360	IPE360	Default
439	IPE360	IPE360	Default
440	IPE360	IPE360	Default
441	IPE360	IPE360	Default
442	IPE360	IPE360	Default
443	IPE360	IPE360	Default
444	IPE360	IPE360	Default
445	IPE360	IPE360	Default
446	IPE360	IPE360	Default
447	IPE360	IPE360	Default
448	IPE360	IPE360	Default
449	IPE360	IPE360	Default
450	IPE360	IPE360	Default
451	IPE360	IPE360	Default
452	IPE360	IPE360	Default
454	IPE360	IPE360	Default
455	IPE400	IPE400	Default
456	IPE400	IPE400	Default

Table 4: Frame Section Assignments

Frame	AnalSect	DesignSect	MatProp
457	IPE400	IPE400	Default
458	W24x55	W24x55	Default
459	W24x55	W24x55	Default
460	W24x55	W24x55	Default
461	W24x55	W24x55	Default
462	IPE360	IPE360	Default
463	IPE360	IPE360	Default
464	IPE360	IPE360	Default
465	IPE360	IPE360	Default
466	IPE360	IPE360	Default
467	IPE360	IPE360	Default
468	IPE360	IPE360	Default
469	IPE300	IPE300	Default
470	IPE300	IPE300	Default
471	IPE300	IPE300	Default
472	IPE300	IPE300	Default
473	IPE300	IPE300	Default
475	IPE240	IPE240	Default
476	IPE240	IPE240	Default
477	IPE240	IPE240	Default
478	IPE300	IPE300	Default
479	IPE240	IPE240	Default
480	IPE240	IPE240	Default
481	IPE240	IPE240	Default
482	IPE240	IPE240	Default
483	IPE240	IPE240	Default
484	IPE240	IPE240	Default
489	IPE240	IPE240	Default
490	IPE240	IPE240	Default
491	IPE240	IPE240	Default
492	IPE240	IPE240	Default
493	IPE300	IPE300	Default
494	IPE240	IPE240	Default
495	IPE240	IPE240	Default
496	IPE240	IPE240	Default
497	IPE240	IPE240	Default
498	IPE240	IPE240	Default
499	IPE240	IPE240	Default
500	IPE240	IPE240	Default
501	IPE240	IPE240	Default
502	IPE240	IPE240	Default
503	IPE240	IPE240	Default
504	IPE240	IPE240	Default
507	IPE400	IPE400	Default
508	IPE400	IPE400	Default
509	IPE400	IPE400	Default
510	IPE400	IPE400	Default
511	IPE400	IPE400	Default
512	IPE400	IPE400	Default
513	IPE400	IPE400	Default
514	IPE400	IPE400	Default
515	IPE400	IPE400	Default
516	IPE400	IPE400	Default
517	IPE400	IPE400	Default

Table 4: Frame Section Assignments

Frame	AnalSect	DesignSect	MatProp
518	IPE400	IPE400	Default
519	IPE400	IPE400	Default
520	IPE400	IPE400	Default
521	IPE360	IPE360	Default
522	IPE360	IPE360	Default
523	IPE360	IPE360	Default
524	IPE360	IPE360	Default
525	IPE360	IPE360	Default
526	IPE360	IPE360	Default
527	IPE360	IPE360	Default
528	IPE360	IPE360	Default
529	IPE360	IPE360	Default
530	IPE360	IPE360	Default
531	IPE360	IPE360	Default
533	IPE360	IPE360	Default
535	IPE360	IPE360	Default
536	IPE360	IPE360	Default
537	IPE400	IPE400	Default
538	IPE400	IPE400	Default
539	IPE400	IPE400	Default
540	IPE400	IPE400	Default
541	IPE400	IPE400	Default
542	IPE400	IPE400	Default
543	IPE400	IPE400	Default
544	IPE400	IPE400	Default
545	IPE400	IPE400	Default
546	IPE400	IPE400	Default
547	IPE400	IPE400	Default
548	IPE400	IPE400	Default
549	IPE400	IPE400	Default
550	IPE400	IPE400	Default
551	IPE360	IPE360	Default
552	IPE360	IPE360	Default
553	IPE360	IPE360	Default
554	IPE360	IPE360	Default
555	IPE360	IPE360	Default
556	IPE360	IPE360	Default
557	IPE360	IPE360	Default
558	IPE360	IPE360	Default
559	IPE360	IPE360	Default
560	IPE240	IPE240	Default
561	IPE360	IPE360	Default
562	IPE360	IPE360	Default
563	IPE360	IPE360	Default
565	IPE360	IPE360	Default
566	IPE360	IPE360	Default
567	IPE300	IPE300	Default
569	IPE300	IPE300	Default
571	IPE240	IPE240	Default
573	IPE300	IPE300	Default
575	IPE240	IPE240	Default
577	IPE300	IPE300	Default
579	IPE240	IPE240	Default
581	IPE240	IPE240	Default

Table 4: Frame Section Assignments

Frame	AnalSect	DesignSect	MatProp
583	IPE240	IPE240	Default
585	IPE240	IPE240	Default
587	IPE300	IPE300	Default
589	IPE300	IPE300	Default
591	IPE300	IPE300	Default
593	IPE300	IPE300	Default
595	IPE240	IPE240	Default
597	IPE240	IPE240	Default
599	IPE240	IPE240	Default
601	IPE240	IPE240	Default
603	IPE240	IPE240	Default
605	IPE240	IPE240	Default
607	IPE360	IPE360	Default
608	IPE360	IPE360	Default
610	IPE240	IPE240	Default
611	IPE240	IPE240	Default
612	IPE240	IPE240	Default
613	IPE360	IPE360	Default
614	IPE360	IPE360	Default
615	IPE360	IPE360	Default
616	IPE360	IPE360	Default
617	IPE360	IPE360	Default
618	IPE360	IPE360	Default
619	IPE240	IPE240	Default
620	IPE240	IPE240	Default
621	IPE240	IPE240	Default
622	IPE240	IPE240	Default
623	IPE240	IPE240	Default
624	IPE240	IPE240	Default
625	IPE300	IPE300	Default
626	IPE240	IPE240	Default
627	IPE360	IPE360	Default
628	IPE360	IPE360	Default
629	IPE360	IPE360	Default
630	IPE360	IPE360	Default
631	IPE360	IPE360	Default
632	IPE240	IPE240	Default
633	IPE240	IPE240	Default
634	IPE240	IPE240	Default
635	IPE240	IPE240	Default
636	IPE240	IPE240	Default
637	IPE240	IPE240	Default
638	IPE240	IPE240	Default
639	IPE240	IPE240	Default
640	IPE240	IPE240	Default
641	IPE240	IPE240	Default
642	IPE240	IPE240	Default
643	IPE240	IPE240	Default
644	IPE240	IPE240	Default
645	IPE240	IPE240	Default
646	IPE240	IPE240	Default
647	IPE240	IPE240	Default
648	IPE240	IPE240	Default
649	IPE240	IPE240	Default

Table 4: Frame Section Assignments

Frame	AnalSect	DesignSect	MatProp
650	IPE240	IPE240	Default
651	IPE240	IPE240	Default
652	IPE240	IPE240	Default
654	IPE240	IPE240	Default
655	IPE240	IPE240	Default
662	IPE360	IPE360	Default
663	IPE240	IPE240	Default
664	IPE240	IPE240	Default
665	IPE240	IPE240	Default
666	IPE240	IPE240	Default
673	IPE240	IPE240	Default
674	IPE240	IPE240	Default
675	IPE240	IPE240	Default
676	IPE240	IPE240	Default
677	IPE240	IPE240	Default
678	IPE240	IPE240	Default
679	IPE240	IPE240	Default
680	IPE240	IPE240	Default
681	IPE360	IPE360	Default
682	IPE360	IPE360	Default
683	IPE360	IPE360	Default
684	IPE360	IPE360	Default
685	IPE360	IPE360	Default
686	IPE360	IPE360	Default
687	IPE360	IPE360	Default
688	IPE360	IPE360	Default
689	IPE240	IPE240	Default
690	IPE240	IPE240	Default
691	IPE240	IPE240	Default
692	IPE240	IPE240	Default
693	IPE240	IPE240	Default
694	IPE240	IPE240	Default
695	IPE240	IPE240	Default
696	IPE240	IPE240	Default
697	IPE240	IPE240	Default
698	IPE240	IPE240	Default
699	IPE240	IPE240	Default
700	IPE240	IPE240	Default
701	IPE240	IPE240	Default
702	IPE240	IPE240	Default
703	IPE360	IPE360	Default
704	IPE360	IPE360	Default
705	IPE360	IPE360	Default
706	IPE360	IPE360	Default
709	IPE240	IPE240	Default
710	IPE240	IPE240	Default
711	IPE240	IPE240	Default
712	IPE240	IPE240	Default
713	IPE240	IPE240	Default
714	IPE240	IPE240	Default
715	IPE240	IPE240	Default
716	IPE240	IPE240	Default
717	IPE240	IPE240	Default
718	IPE240	IPE240	Default

Table 4: Frame Section Assignments

Frame	AnalSect	DesignSect	MatProp
719	IPE360	IPE360	Default
720	IPE360	IPE360	Default
721	IPE360	IPE360	Default
722	IPE360	IPE360	Default
723	IPE360	IPE360	Default
724	IPE360	IPE360	Default
725	IPE240	IPE240	Default
726	IPE240	IPE240	Default
727	IPE240	IPE240	Default
728	IPE240	IPE240	Default
729	IPE240	IPE240	Default
730	IPE240	IPE240	Default
731	IPE240	IPE240	Default
732	IPE240	IPE240	Default
733	IPE240	IPE240	Default
734	IPE240	IPE240	Default
735	IPE240	IPE240	Default
736	IPE240	IPE240	Default
737	IPE240	IPE240	Default
738	IPE240	IPE240	Default
739	IPE240	IPE240	Default
740	IPE240	IPE240	Default
741	IPE240	IPE240	Default
742	IPE240	IPE240	Default
743	IPE240	IPE240	Default
744	IPE240	IPE240	Default
745	IPE240	IPE240	Default
746	IPE240	IPE240	Default
747	IPE240	IPE240	Default
749	IPE240	IPE240	Default
750	IPE240	IPE240	Default
751	IPE360	IPE360	Default
752	IPE360	IPE360	Default
753	IPE300	IPE300	Default
754	IPE300	IPE300	Default
755	IPE300	IPE300	Default
756	IPE300	IPE300	Default
757	IPE300	IPE300	Default
758	IPE300	IPE300	Default
759	IPE300	IPE300	Default
760	IPE300	IPE300	Default
761	IPE240	IPE240	Default
762	IPE240	IPE240	Default
763	IPE240	IPE240	Default
764	IPE240	IPE240	Default
765	IPE240	IPE240	Default
766	IPE240	IPE240	Default
767	IPE240	IPE240	Default
768	IPE240	IPE240	Default
769	IPE240	IPE240	Default
770	IPE240	IPE240	Default
771	IPE240	IPE240	Default
772	IPE240	IPE240	Default
773	IPE240	IPE240	Default

Table 4: Frame Section Assignments

Frame	AnalSect	DesignSect	MatProp
775	IPE240	IPE240	Default
776	IPE240	IPE240	Default
777	IPE240	IPE240	Default
778	IPE240	IPE240	Default
779	IPE240	IPE240	Default
780	IPE240	IPE240	Default
781	IPE240	IPE240	Default
782	IPE240	IPE240	Default
783	IPE240	IPE240	Default
784	IPE240	IPE240	Default
785	IPE240	IPE240	Default
786	IPE240	IPE240	Default
787	IPE360	IPE360	Default
788	IPE360	IPE360	Default
789	IPE360	IPE360	Default
790	IPE360	IPE360	Default
791	IPE360	IPE360	Default
792	IPE360	IPE360	Default
793	IPE360	IPE360	Default
794	IPE360	IPE360	Default
795	IPE360	IPE360	Default
796	IPE360	IPE360	Default
797	IPE360	IPE360	Default
798	IPE240	IPE240	Default
799	IPE240	IPE240	Default
800	IPE240	IPE240	Default
801	IPE240	IPE240	Default
802	IPE240	IPE240	Default
803	IPE240	IPE240	Default
804	IPE240	IPE240	Default
805	IPE240	IPE240	Default
806	IPE240	IPE240	Default
807	IPE240	IPE240	Default
808	IPE240	IPE240	Default
809	IPE240	IPE240	Default
810	IPE240	IPE240	Default
811	IPE240	IPE240	Default
812	IPE240	IPE240	Default
813	IPE240	IPE240	Default
814	IPE240	IPE240	Default
815	IPE240	IPE240	Default
816	IPE240	IPE240	Default
817	IPE240	IPE240	Default
818	IPE240	IPE240	Default
819	IPE240	IPE240	Default
820	IPE240	IPE240	Default
821	IPE240	IPE240	Default
822	IPE240	IPE240	Default
823	IPE240	IPE240	Default
824	IPE240	IPE240	Default
825	IPE240	IPE240	Default
826	IPE240	IPE240	Default
827	IPE240	IPE240	Default
828	IPE240	IPE240	Default

Table 4: Frame Section Assignments

Frame	AnalSect	DesignSect	MatProp
829	IPE240	IPE240	Default
830	IPE240	IPE240	Default
831	IPE240	IPE240	Default
832	IPE240	IPE240	Default
833	IPE240	IPE240	Default
834	IPE240	IPE240	Default
835	IPE240	IPE240	Default
836	IPE240	IPE240	Default
837	IPE240	IPE240	Default
838	IPE240	IPE240	Default
839	IPE240	IPE240	Default
840	IPE240	IPE240	Default
841	IPE240	IPE240	Default
842	IPE240	IPE240	Default
843	IPE240	IPE240	Default
844	IPE240	IPE240	Default
845	IPE240	IPE240	Default
846	IPE240	IPE240	Default
847	IPE240	IPE240	Default
848	IPE240	IPE240	Default
849	IPE240	IPE240	Default
850	IPE240	IPE240	Default
851	IPE240	IPE240	Default
852	IPE240	IPE240	Default
853	IPE240	IPE240	Default
854	IPE240	IPE240	Default
855	IPE240	IPE240	Default
856	IPE240	IPE240	Default
857	IPE240	IPE240	Default
858	IPE240	IPE240	Default
859	IPE240	IPE240	Default
860	IPE240	IPE240	Default
861	IPE240	IPE240	Default
862	IPE240	IPE240	Default
863	IPE240	IPE240	Default
864	IPE240	IPE240	Default
865	IPE240	IPE240	Default
866	IPE240	IPE240	Default
867	IPE240	IPE240	Default
868	IPE240	IPE240	Default
869	IPE240	IPE240	Default
870	IPE240	IPE240	Default
871	IPE360	IPE360	Default
872	IPE360	IPE360	Default
873	IPE240	IPE240	Default
874	IPE240	IPE240	Default
875	IPE240	IPE240	Default
876	IPE240	IPE240	Default
877	IPE240	IPE240	Default
878	IPE240	IPE240	Default
879	IPE240	IPE240	Default
880	IPE240	IPE240	Default
881	IPE360	IPE360	Default
882	IPE360	IPE360	Default

Table 4: Frame Section Assignments

Frame	AnalSect	DesignSect	MatProp
883	IPE240	IPE240	Default
884	IPE240	IPE240	Default
885	IPE240	IPE240	Default
886	IPE240	IPE240	Default
887	IPE360	IPE360	Default
888	IPE360	IPE360	Default
889	IPE240	IPE240	Default
890	IPE240	IPE240	Default
891	IPE240	IPE240	Default
892	IPE240	IPE240	Default
893	IPE240	IPE240	Default
894	IPE240	IPE240	Default
895	IPE360	IPE360	Default
896	IPE360	IPE360	Default
897	IPE240	IPE240	Default
898	IPE240	IPE240	Default
899	IPE240	IPE240	Default
900	IPE240	IPE240	Default
901	IPE240	IPE240	Default
902	IPE240	IPE240	Default
903	IPE240	IPE240	Default
904	IPE240	IPE240	Default
905	IPE240	IPE240	Default
906	IPE240	IPE240	Default
907	IPE240	IPE240	Default
908	IPE240	IPE240	Default
909	IPE240	IPE240	Default
910	IPE240	IPE240	Default
911	IPE240	IPE240	Default
912	IPE240	IPE240	Default
913	IPE240	IPE240	Default
914	IPE240	IPE240	Default
915	IPE240	IPE240	Default
916	IPE240	IPE240	Default
917	IPE360	IPE360	Default
918	IPE360	IPE360	Default
919	IPE240	IPE240	Default
920	IPE240	IPE240	Default
921	IPE240	IPE240	Default
922	IPE240	IPE240	Default
923	IPE240	IPE240	Default
924	IPE240	IPE240	Default
925	IPE240	IPE240	Default
926	IPE240	IPE240	Default
927	IPE360	IPE360	Default
928	IPE360	IPE360	Default
929	IPE240	IPE240	Default
930	IPE240	IPE240	Default
931	IPE240	IPE240	Default
932	IPE240	IPE240	Default
933	IPE360	IPE360	Default
934	IPE360	IPE360	Default
935	IPE240	IPE240	Default
936	IPE240	IPE240	Default

Table 4: Frame Section Assignments

Frame	AnalSect	DesignSect	MatProp
937	IPE240	IPE240	Default
938	IPE240	IPE240	Default
939	IPE240	IPE240	Default
940	IPE240	IPE240	Default
941	IPE360	IPE360	Default
942	IPE360	IPE360	Default
943	IPE240	IPE240	Default
944	IPE240	IPE240	Default
945	IPE240	IPE240	Default
946	IPE240	IPE240	Default
947	IPE240	IPE240	Default
948	IPE240	IPE240	Default
949	IPE240	IPE240	Default
950	IPE240	IPE240	Default
951	IPE240	IPE240	Default
952	IPE240	IPE240	Default
953	IPE360	IPE360	Default
954	IPE360	IPE360	Default
955	IPE360	IPE360	Default
956	IPE360	IPE360	Default
957	IPE360	IPE360	Default
958	IPE360	IPE360	Default
959	IPE360	IPE360	Default
960	IPE360	IPE360	Default
961	IPE240	IPE240	Default
962	IPE240	IPE240	Default
963	IPE240	IPE240	Default
964	IPE240	IPE240	Default
965	IPE240	IPE240	Default
966	IPE240	IPE240	Default
967	IPE240	IPE240	Default
968	IPE240	IPE240	Default
969	IPE240	IPE240	Default
970	IPE240	IPE240	Default
971	IPE240	IPE240	Default
972	IPE240	IPE240	Default
973	IPE240	IPE240	Default
974	IPE240	IPE240	Default
975	IPE360	IPE360	Default
976	IPE360	IPE360	Default
977	IPE360	IPE360	Default
978	IPE360	IPE360	Default
979	IPE300	IPE300	Default
980	IPE300	IPE300	Default
981	IPE300	IPE300	Default
982	IPE300	IPE300	Default
983	IPE240	IPE240	Default
984	IPE240	IPE240	Default
985	IPE300	IPE300	Default
986	IPE300	IPE300	Default
987	IPE240	IPE240	Default
988	IPE240	IPE240	Default
989	IPE300	IPE300	Default
990	IPE300	IPE300	Default

Table 4: Frame Section Assignments

Frame	AnalSect	DesignSect	MatProp
991	IPE240	IPE240	Default
992	IPE240	IPE240	Default
993	IPE240	IPE240	Default
994	IPE240	IPE240	Default
995	IPE240	IPE240	Default
996	IPE240	IPE240	Default
997	IPE240	IPE240	Default
998	IPE240	IPE240	Default
1000	IPE240	IPE240	Default
1001	IPE240	IPE240	Default
1002	IPE240	IPE240	Default
1005	IPE240	IPE240	Default
1006	IPE240	IPE240	Default
1007	IPE240	IPE240	Default
1009	VIGA (0.50X1.20)	N.A.	Default
1010	VIGA (0.50X1.20)	N.A.	Default
1011	VIGA (0.50X1.20)	N.A.	Default
1012	IPE240	IPE240	Default
1013	IPE240	IPE240	Default
1014	IPE240	IPE240	Default
1015	IPE240	IPE240	Default
1016	IPE240	IPE240	Default
1017	IPE240	IPE240	Default
1018	IPE240	IPE240	Default
1020	IPE240	IPE240	Default
1021	IPE240	IPE240	Default
1022	IPE240	IPE240	Default
1023	IPE240	IPE240	Default
1025	IPE240	IPE240	Default
1026	IPE240	IPE240	Default
1027	IPE240	IPE240	Default
1028	IPE240	IPE240	Default
1030	IPE240	IPE240	Default
1032	IPE240	IPE240	Default
1034	IPE240	IPE240	Default
1035	IPE240	IPE240	Default
1036	IPE240	IPE240	Default
1037	IPE240	IPE240	Default
1038	IPE240	IPE240	Default
1039	IPE240	IPE240	Default
1040	IPE240	IPE240	Default
1041	IPE240	IPE240	Default
1042	IPE240	IPE240	Default
1043	IPE240	IPE240	Default
1044	IPE240	IPE240	Default
1045	IPE360	IPE360	Default
1047	IPE240	IPE240	Default
1049	IPE240	IPE240	Default
1051	IPE240	IPE240	Default
1055	IPE240	IPE240	Default
1056	IPE240	IPE240	Default
1057	IPE240	IPE240	Default
1058	IPE240	IPE240	Default
1059	IPE240	IPE240	Default

Table 4: Frame Section Assignments

Frame	AnalSect	DesignSect	MatProp
1060	IPE360	IPE360	Default
1061	IPE360	IPE360	Default
1062	IPE240	IPE240	Default
1063	IPE240	IPE240	Default
1064	IPE240	IPE240	Default
1065	IPE240	IPE240	Default
1066	IPE240	IPE240	Default
1067	IPE240	IPE240	Default
1068	IPE240	IPE240	Default
1069	IPE240	IPE240	Default
1070	IPE240	IPE240	Default
1071	IPE240	IPE240	Default
1072	IPE240	IPE240	Default
1073	IPE240	IPE240	Default
1074	IPE360	IPE360	Default
1075	IPE360	IPE360	Default
1076	IPE360	IPE360	Default

Table 5: Connectivity - Area

Table 5: Connectivity - Area

Area	Joint1	Joint2	Joint3	Joint4
1	304	317	316	303
2	303	316	315	302
3	302	315	314	301
4	314	313	300	301
5	300	313	312	296
6	184	185	228	161
7	163	209	185	184
8	185	186	229	228
9	209	210	186	185
10	186	187	230	229
11	210	211	187	186
12	187	188	231	230
13	211	212	188	187
14	188	189	232	231
15	172	173	284	285
16	212	213	189	188
17	213	164	190	189
18	189	190	162	232
19	190	191	233	162
20	191	192	234	233
21	192	193	235	234
22	193	194	236	235
23	194	195	177	236
24	285	284	282	283
25	164	214	191	190
26	214	215	192	191
27	215	216	193	192
28	216	217	194	193
29	217	165	195	194

Table 5: Connectivity - Area

Area	Joint1	Joint2	Joint3	Joint4
30	195	196	237	177
31	196	197	238	237
32	197	198	178	238
33	165	218	196	195
34	218	219	197	196
35	219	166	198	197
36	166	220	199	198
37	220	221	200	199
38	221	222	201	200
39	222	167	202	201
40	167	223	203	202
41	223	224	204	203
42	224	225	205	204
43	225	226	206	205
44	226	227	207	206
45	198	199	239	178
46	199	200	240	239
47	200	201	241	240
48	201	202	179	241
49	202	203	367	179
50	203	204	368	242
51	204	205	369	243
52	205	206	370	244
53	206	207	371	245
54	255	261	252	156
55	256	258	262	261
56	262	263	254	253
57	259	159	260	263
58	157	256	261	255
59	261	262	253	252
60	263	260	158	254
61	258	259	263	262
62	247	180	159	257
63	283	282	280	281
64	373	244	354	353
65	374	245	355	354
66	375	246	356	355
67	359	353	284	358
68	353	354	282	284
69	354	355	280	282
70	355	356	278	280
71	281	280	278	279
72	279	278	170	171
73	359	360	243	353
75	182	265	334	183
76	265	266	335	334
77	266	267	347	335
78	267	268	349	347
79	268	269	336	349
80	269	270	337	336
81	270	271	341	337
82	271	272	339	341
83	272	273	343	339
84	273	274	345	343

Table 5: Connectivity - Area

Area	Joint1	Joint2	Joint3	Joint4
85	250	251	270	269
86	248	249	266	265
87	181	380	265	182
88	381	346	267	266
89	346	348	268	267
90	348	382	269	268
91	383	352	271	270
92	352	338	272	271
93	338	342	273	272
94	342	344	274	273
98	183	160	264	182
99	181	182	264	386
100	344	387	275	274
101	345	274	275	174
102	174	275	359	388
103	387	389	359	275
104	278	356	357	170
105	356	246	169	357
106	246	207	208	169
107	207	227	168	208
109	55	56	99	6
110	8	80	56	55
111	80	81	57	56
112	56	57	100	99
113	57	58	101	100
114	81	82	58	57
115	58	59	102	101
116	82	83	59	58
117	59	60	103	102
118	83	84	60	59
119	60	61	12	103
120	84	10	61	60
121	61	62	104	12
122	10	85	62	61
123	62	63	105	104
124	86	87	64	63
125	85	86	63	62
126	63	64	106	105
127	64	65	107	106
128	87	88	65	64
129	65	66	26	107
130	88	28	66	65
131	66	67	108	26
132	28	89	67	66
133	67	68	109	108
134	89	90	68	67
135	68	69	24	109
136	90	30	69	68
137	69	70	110	24
138	30	91	70	69
139	70	71	111	110
140	91	92	71	70
141	71	72	112	111
142	92	93	72	71

Table 5: Connectivity - Area

Area	Joint1	Joint2	Joint3	Joint4
143	72	73	42	112
144	93	32	73	72
145	73	74	390	42
146	32	94	74	73
147	74	75	391	113
148	94	95	75	74
149	75	76	392	114
150	95	96	76	75
151	76	77	393	115
152	96	97	77	76
153	77	78	394	116
154	97	98	78	77
155	4	127	132	126
156	127	129	133	132
157	129	130	134	133
158	130	14	131	134
159	126	132	123	2
160	132	133	124	123
161	133	134	125	124
162	134	131	18	125
163	118	51	14	128
164	53	136	318	54
165	136	137	319	318
166	137	138	331	319
167	138	139	333	331
168	139	140	320	333
169	119	120	137	136
170	395	330	138	137
171	332	396	140	139
172	330	332	139	138
173	52	397	136	53
174	121	122	141	140
175	140	141	321	320
176	141	142	325	321
177	142	143	323	325
178	143	144	327	323
179	144	145	329	327
180	326	328	145	144
181	322	326	144	143
182	398	322	143	142
183	399	398	142	141
184	114	392	152	154
185	115	393	150	152
186	116	394	148	150
187	154	152	153	400
188	152	150	151	401
189	150	148	149	402
191	16	135	53	54
192	52	405	135	53
194	145	146	44	329
195	328	407	146	145
196	44	146	147	408
197	50	48	154	155
198	149	148	38	40

Table 5: Connectivity - Area

Area	Joint1	Joint2	Joint3	Joint4
199	148	117	36	38
200	117	78	79	36
201	78	98	34	79
202	48	46	409	154
203	46	113	114	409
204	42	113	46	410
205	146	410	46	147
206	16	411	14	135
207	14	51	12	135
208	160	412	159	264
209	159	180	162	264

Table 6: Area Section Assignments

Table 6: Area Section Assignments

Area	Section	MatProp
1	ENTABLADO	Default
2	ENTABLADO	Default
3	ENTABLADO	Default
4	ENTABLADO	Default
5	ENTABLADO	Default
6	ENTABLADO	Default
7	ENTABLADO	Default
8	ENTABLADO	Default
9	ENTABLADO	Default
10	ENTABLADO	Default
11	ENTABLADO	Default
12	ENTABLADO	Default
13	ENTABLADO	Default
14	ENTABLADO	Default
15	ENTABLADO	Default
16	ENTABLADO	Default
17	ENTABLADO	Default
18	ENTABLADO	Default
19	ENTABLADO	Default
20	ENTABLADO	Default
21	ENTABLADO	Default
22	ENTABLADO	Default
23	ENTABLADO	Default
24	ENTABLADO	Default
25	ENTABLADO	Default
26	ENTABLADO	Default
27	ENTABLADO	Default
28	ENTABLADO	Default
29	ENTABLADO	Default
30	ENTABLADO	Default
31	ENTABLADO	Default
32	ENTABLADO	Default
33	ENTABLADO	Default
34	ENTABLADO	Default
35	ENTABLADO	Default

Table 6: Area Section Assignments

Area	Section	MatProp
36	ENTABLADO	Default
37	ENTABLADO	Default
38	ENTABLADO	Default
39	ENTABLADO	Default
40	ENTABLADO	Default
41	ENTABLADO	Default
42	ENTABLADO	Default
43	ENTABLADO	Default
44	ENTABLADO	Default
45	ENTABLADO	Default
46	ENTABLADO	Default
47	ENTABLADO	Default
48	ENTABLADO	Default
49	ENTABLADO	Default
50	ENTABLADO	Default
51	ENTABLADO	Default
52	ENTABLADO	Default
53	ENTABLADO	Default
54	ENTABLADO	Default
55	ENTABLADO	Default
56	ENTABLADO	Default
57	ENTABLADO	Default
58	ENTABLADO	Default
59	ENTABLADO	Default
60	ENTABLADO	Default
61	ENTABLADO	Default
62	ENTABLADO	Default
63	ENTABLADO	Default
64	ENTABLADO	Default
65	ENTABLADO	Default
66	ENTABLADO	Default
67	ENTABLADO	Default
68	ENTABLADO	Default
69	ENTABLADO	Default
70	ENTABLADO	Default
71	ENTABLADO	Default
72	ENTABLADO	Default
73	ENTABLADO	Default
75	ENTABLADO	Default
76	ENTABLADO	Default
77	ENTABLADO	Default
78	ENTABLADO	Default
79	ENTABLADO	Default
80	ENTABLADO	Default
81	ENTABLADO	Default
82	ENTABLADO	Default
83	ENTABLADO	Default
84	ENTABLADO	Default
85	ENTABLADO	Default
86	ENTABLADO	Default
87	ENTABLADO	Default
88	ENTABLADO	Default
89	ENTABLADO	Default
90	ENTABLADO	Default

Table 6: Area Section Assignments

Area	Section	MatProp
91	ENTABLADO	Default
92	ENTABLADO	Default
93	ENTABLADO	Default
94	ENTABLADO	Default
98	ENTABLADO	Default
99	ENTABLADO	Default
100	ENTABLADO	Default
101	ENTABLADO	Default
102	ENTABLADO	Default
103	ENTABLADO	Default
104	ENTABLADO	Default
105	ENTABLADO	Default
106	ENTABLADO	Default
107	ENTABLADO	Default
109	ENTABLADO	Default
110	ENTABLADO	Default
111	ENTABLADO	Default
112	ENTABLADO	Default
113	ENTABLADO	Default
114	ENTABLADO	Default
115	ENTABLADO	Default
116	ENTABLADO	Default
117	ENTABLADO	Default
118	ENTABLADO	Default
119	ENTABLADO	Default
120	ENTABLADO	Default
121	ENTABLADO	Default
122	ENTABLADO	Default
123	ENTABLADO	Default
124	ENTABLADO	Default
125	ENTABLADO	Default
126	ENTABLADO	Default
127	ENTABLADO	Default
128	ENTABLADO	Default
129	ENTABLADO	Default
130	ENTABLADO	Default
131	ENTABLADO	Default
132	ENTABLADO	Default
133	ENTABLADO	Default
134	ENTABLADO	Default
135	ENTABLADO	Default
136	ENTABLADO	Default
137	ENTABLADO	Default
138	ENTABLADO	Default
139	ENTABLADO	Default
140	ENTABLADO	Default
141	ENTABLADO	Default
142	ENTABLADO	Default
143	ENTABLADO	Default
144	ENTABLADO	Default
145	ENTABLADO	Default
146	ENTABLADO	Default
147	ENTABLADO	Default
148	ENTABLADO	Default

Table 6: Area Section Assignments

Area	Section	MatProp
149	ENTABLADO	Default
150	ENTABLADO	Default
151	ENTABLADO	Default
152	ENTABLADO	Default
153	ENTABLADO	Default
154	ENTABLADO	Default
155	ENTABLADO	Default
156	ENTABLADO	Default
157	ENTABLADO	Default
158	ENTABLADO	Default
159	ENTABLADO	Default
160	ENTABLADO	Default
161	ENTABLADO	Default
162	ENTABLADO	Default
163	ENTABLADO	Default
164	ENTABLADO	Default
165	ENTABLADO	Default
166	ENTABLADO	Default
167	ENTABLADO	Default
168	ENTABLADO	Default
169	ENTABLADO	Default
170	ENTABLADO	Default
171	ENTABLADO	Default
172	ENTABLADO	Default
173	ENTABLADO	Default
174	ENTABLADO	Default
175	ENTABLADO	Default
176	ENTABLADO	Default
177	ENTABLADO	Default
178	ENTABLADO	Default
179	ENTABLADO	Default
180	ENTABLADO	Default
181	ENTABLADO	Default
182	ENTABLADO	Default
183	ENTABLADO	Default
184	ENTABLADO	Default
185	ENTABLADO	Default
186	ENTABLADO	Default
187	ENTABLADO	Default
188	ENTABLADO	Default
189	ENTABLADO	Default
191	ENTABLADO	Default
192	ENTABLADO	Default
194	ENTABLADO	Default
195	ENTABLADO	Default
196	ENTABLADO	Default
197	ENTABLADO	Default
198	ENTABLADO	Default
199	ENTABLADO	Default
200	ENTABLADO	Default
201	ENTABLADO	Default
202	ENTABLADO	Default
203	ENTABLADO	Default
204	ENTABLADO	Default

Table 6: Area Section Assignments

Area	Section	MatProp
205	ENTABLADO	Default
206	ENTABLADO	Default
207	ENTABLADO	Default
208	ENTABLADO	Default
209	ENTABLADO	Default

2. Material properties

This section provides material property information for materials used in the model.

Table 7: Material Properties 02 - Basic Mechanical Properties

Table 7: Material Properties 02 - Basic Mechanical Properties

Material	UnitWeight	UnitMass	E1	G12	U12	A1
	Kgf/m3	Kgf-s2/m4	Kgf/m2	Kgf/m2		1/C
3000Psi	2.4028E+03	2.4501E+02	2194996450.	914581854.	0.2	9.9000E-06
4000Psi	2.4028E+03	2.4501E+02	2534563541.	1056068142.	0.2	9.9000E-06
A36	7.8490E+03	8.0038E+02	2.039E+10	7841930445.	0.3	1.1700E-05
A416Gr270	7.8490E+03	8.0038E+02	2.004E+10			1.1700E-05
A572Gr50	7.8490E+03	8.0038E+02	2.039E+10	7841930445.	0.3	1.1700E-05
A615Gr60	7.8490E+03	8.0038E+02	2.039E+10			1.1700E-05
A992Fy50	7.8490E+03	8.0038E+02	2.039E+10	7841930445.	0.3	1.1700E-05

Table 8: Material Properties 03a - Steel Data

Table 8: Material Properties 03a - Steel Data

Material	Fy	Fu	FinalSlope
	Kgf/m2	Kgf/m2	
A36	25310506.54	40778038.32	-0.1
A572Gr50	35153481.31	45699525.7	-0.1
A992Fy50	35153481.31	45699525.7	-0.1

Table 9: Material Properties 03b - Concrete Data

Table 9: Material Properties 03b - Concrete Data

Material	Fc	eFc	FinalSlope
	Kgf/m2	Kgf/m2	
3000Psi	2109208.88	2109208.88	-0.1
4000Psi	2812278.5	2812278.5	-0.1

Table 10: Material Properties 03e - Rebar Data

Table 10: Material Properties 03e - Rebar Data

Material	Fy	Fu	FinalSlope
	Kgf/m2	Kgf/m2	
A615Gr60	42184177.57	63276266.35	-0.1

3. Section properties

This section provides section property information for objects used in the model.

3.1. Frames

Table 12: Frame Section Properties 01 - General, Part 1 of 4

Table 12: Frame Section Properties 01 - General, Part 1 of 4

SectionName	Material	Shape	t3	t2	tf	tw	t2b	tfb
			m	m	m	m	m	m
COLUMNA D-0.40	3000Psi	Circle	0.4					
COLUMNA D-0.50	3000Psi	Circle	0.5					
IPE240	A572Gr50	I/Wide Flange	0.24	0.12	0.0098	0.0062	0.12	0.0098
IPE300	A572Gr50	I/Wide Flange	0.3	0.15	0.0107	0.0071	0.15	0.0107
IPE360	A572Gr50	I/Wide Flange	0.36	0.17	0.0127	0.008	0.17	0.0127
IPE400	A572Gr50	I/Wide Flange	0.4	0.18	0.0135	0.0086	0.18	0.0135
VIGA (0.50X1.20)	3000Psi	Rectangular	1.2	0.5				
W12x106	A572Gr50	I/Wide Flange	0.327406	0.310388	0.025146	0.015494	0.310388	0.025146

Table 12: Frame Section Properties 01 - General, Part 2 of 4

Table 12: Frame Section Properties 01 - General, Part 2 of 4

SectionName	Area	TorsConst	I33	I22	I23	AS2	AS3
	m2	m4	m4	m4	m4	m2	m2
COLUMNA D-0.40	0.125664	0.002513	0.001257	0.001257	0.	0.113097	0.113097
COLUMNA D-0.50	0.19635	0.006136	0.003068	0.003068	0.	0.176715	0.176715
IPE240	0.00391	1.300E-07	0.000039	2.840E-06	0.	0.001488	0.00196
IPE300	0.00538	1.990E-07	0.000084	6.040E-06	0.	0.00213	0.002675
IPE360	0.00727	3.740E-07	0.000163	0.00001	0.	0.00288	0.003598
IPE400	0.00845	5.130E-07	0.000231	0.000013	0.	0.00344	0.00405
VIGA (0.50X1.20)	0.6	0.036908	0.072	0.0125	0.	0.5	0.5
W12x106	0.020129	3.800E-06	0.000388	0.000125	0.	0.005073	0.013008

Table 12: Frame Section Properties 01 - General, Part 3 of 4

Table 12: Frame Section Properties 01 - General, Part 3 of 4

SectionName	S33	S22	Z33	Z22	R33	R22
	m3	m3	m3	m3	m	m
COLUMNA D-0.40	0.006283	0.006283	0.010667	0.010667	0.1	0.1
COLUMNA D-0.50	0.012272	0.012272	0.020833	0.020833	0.125	0.125
IPE240	0.000324	0.000047	0.000367	0.000074	0.09977	0.026951
IPE300	0.000557	0.000081	0.000628	0.000125	0.124626	0.033506
IPE360	0.000904	0.000123	0.001019	0.000191	0.149598	0.037877
IPE400	0.001157	0.000146	0.001307	0.000229	0.165447	0.039494
VIGA (0.50X1.20)	0.12	0.05	0.18	0.075	0.34641	0.144338
W12x106	0.002372	0.000807	0.002687	0.001231	0.138898	0.078893

Table 12: Frame Section Properties 01 - General, Part 4 of 4

Table 12: Frame Section Properties 01 - General, Part 4 of 4

SectionName	AMod	A2Mod	A3Mod	JMod	I2Mod	I3Mod	MMod	WMod
COLUMNA D-0.40	1.	1.	1.	1.	1.	1.	1.	1.
COLUMNA D-0.50	1.	1.	1.	1.	1.	1.	1.	1.
IPE240	1.	1.	1.	1.	1.	1.	1.	1.
IPE300	1.	1.	1.	1.	1.	1.	1.	1.
IPE360	1.	1.	1.	1.	1.	1.	1.	1.
IPE400	1.	1.	1.	1.	1.	1.	1.	1.
VIGA (0.50X1.20)	1.	1.	1.	1.	1.	1.	1.	1.
W12x106	1.	1.	1.	1.	1.	1.	1.	1.

Table 13: Frame Section Properties 02 - Concrete Column, Part 1 of 2

Table 13: Frame Section Properties 02 - Concrete Column, Part 1 of 2

SectionName	RebarMatL	RebarMatC	ReinfConfig	LatReinf	Cover	NumBarsCirc	BarSizeL
					m		
COLUMNA D-0.40	A615Gr60	A615Gr60	Circular	Ties	0.04	8	#9
COLUMNA D-0.50	A615Gr60	A615Gr60	Circular	Ties	0.04	8	#9

Table 13: Frame Section Properties 02 - Concrete Column, Part 2 of 2

Table 13: Frame Section Properties 02 - Concrete Column, Part 2 of 2

SectionName	BarSizeC	SpacingC
		m
COLUMNA D-0.40	#4	0.15
COLUMNA D-0.50	#4	0.15

Table 14: Frame Section Properties 03 - Concrete Beam, Part 1 of 2

Table 14: Frame Section Properties 03 - Concrete Beam, Part 1 of 2

SectionName	RebarMatL	RebarMatC	TopCover	BotCover
			m	m
VIGA (0.50X1.20)	A615Gr60	A615Gr60	0.06	0.06

Table 14: Frame Section Properties 03 - Concrete Beam, Part 2 of 2

Table 14: Frame Section Properties 03 - Concrete Beam, Part 2 of 2

SectionName	TopLeftArea	TopRghtArea	BotLeftArea	BotRghtArea
	m2	m2	m2	m2
VIGA (0.50X1.20)	0.	0.	0.	0.

Table 15: Frame Property Modifiers, Part 1 of 2

Table 15: Frame Property Modifiers, Part 1 of 2

Frame	AMod	AS2Mod	AS3Mod	JMod	I22Mod	I33Mod	MassMod	WeightMod
1	1.	1.	1.	1.	1.	1.	1.	1.
2	1.	1.	1.	1.	1.	1.	1.	1.
3	1.	1.	1.	1.	1.	1.	1.	1.
4	1.	1.	1.	1.	1.	1.	1.	1.
5	1.	1.	1.	1.	1.	1.	1.	1.
6	1.	1.	1.	1.	1.	1.	1.	1.
7	1.	1.	1.	1.	1.	1.	1.	1.
8	1.	1.	1.	1.	1.	1.	1.	1.
9	1.	1.	1.	1.	1.	1.	1.	1.
10	1.	1.	1.	1.	1.	1.	1.	1.
11	1.	1.	1.	1.	1.	1.	1.	1.
12	1.	1.	1.	1.	1.	1.	1.	1.
13	1.	1.	1.	1.	1.	1.	1.	1.
14	1.	1.	1.	1.	1.	1.	1.	1.
15	1.	1.	1.	1.	1.	1.	1.	1.
16	1.	1.	1.	1.	1.	1.	1.	1.
17	1.	1.	1.	1.	1.	1.	1.	1.
18	1.	1.	1.	1.	1.	1.	1.	1.
19	1.	1.	1.	1.	1.	1.	1.	1.
20	1.	1.	1.	1.	1.	1.	1.	1.
21	1.	1.	1.	1.	1.	1.	1.	1.
22	1.	1.	1.	1.	1.	1.	1.	1.
37	1.	1.	1.	1.	1.	1.	1.	1.
38	1.	1.	1.	1.	1.	1.	1.	1.
40	1.	1.	1.	1.	1.	1.	1.	1.
41	1.	1.	1.	1.	1.	1.	1.	1.
42	1.	1.	1.	1.	1.	1.	1.	1.
43	1.	1.	1.	1.	1.	1.	1.	1.
44	1.	1.	1.	1.	1.	1.	1.	1.
45	1.	1.	1.	1.	1.	1.	1.	1.
46	1.	1.	1.	1.	1.	1.	1.	1.
47	1.	1.	1.	1.	1.	1.	1.	1.
48	1.	1.	1.	1.	1.	1.	1.	1.
49	1.	1.	1.	1.	1.	1.	1.	1.
50	1.	1.	1.	1.	1.	1.	1.	1.
51	1.	1.	1.	1.	1.	1.	1.	1.
52	1.	1.	1.	1.	1.	1.	1.	1.
53	1.	1.	1.	1.	1.	1.	1.	1.
54	1.	1.	1.	1.	1.	1.	1.	1.
55	1.	1.	1.	1.	1.	1.	1.	1.
56	1.	1.	1.	1.	1.	1.	1.	1.
57	1.	1.	1.	1.	1.	1.	1.	1.
58	1.	1.	1.	1.	1.	1.	1.	1.
59	1.	1.	1.	1.	1.	1.	1.	1.
60	1.	1.	1.	1.	1.	1.	1.	1.
61	1.	1.	1.	1.	1.	1.	1.	1.
62	1.	1.	1.	1.	1.	1.	1.	1.
63	1.	1.	1.	1.	1.	1.	1.	1.
110	1.	1.	1.	1.	1.	1.	1.	1.
111	1.	1.	1.	1.	1.	1.	1.	1.
112	1.	1.	1.	1.	1.	1.	1.	1.
113	1.	1.	1.	1.	1.	1.	1.	1.
114	1.	1.	1.	1.	1.	1.	1.	1.

Table 15: Frame Property Modifiers, Part 1 of 2

Frame	AMod	AS2Mod	AS3Mod	JMod	I22Mod	I33Mod	MassMod	WeightMod
115	1.	1.	1.	1.	1.	1.	1.	1.
116	1.	1.	1.	1.	1.	1.	1.	1.
117	1.	1.	1.	1.	1.	1.	1.	1.
118	1.	1.	1.	1.	1.	1.	1.	1.
119	1.	1.	1.	1.	1.	1.	1.	1.
120	1.	1.	1.	1.	1.	1.	1.	1.
121	1.	1.	1.	1.	1.	1.	1.	1.
122	1.	1.	1.	1.	1.	1.	1.	1.
123	1.	1.	1.	1.	1.	1.	1.	1.
124	1.	1.	1.	1.	1.	1.	1.	1.
125	1.	1.	1.	1.	1.	1.	1.	1.
126	1.	1.	1.	1.	1.	1.	1.	1.
127	1.	1.	1.	1.	1.	1.	1.	1.
128	1.	1.	1.	1.	1.	1.	1.	1.
129	1.	1.	1.	1.	1.	1.	1.	1.
130	1.	1.	1.	1.	1.	1.	1.	1.
131	1.	1.	1.	1.	1.	1.	1.	1.
132	1.	1.	1.	1.	1.	1.	1.	1.
133	1.	1.	1.	1.	1.	1.	1.	1.
134	1.	1.	1.	1.	1.	1.	1.	1.
135	1.	1.	1.	1.	1.	1.	1.	1.
136	1.	1.	1.	1.	1.	1.	1.	1.
137	1.	1.	1.	1.	1.	1.	1.	1.
138	1.	1.	1.	1.	1.	1.	1.	1.
139	1.	1.	1.	1.	1.	1.	1.	1.
140	1.	1.	1.	1.	1.	1.	1.	1.
141	1.	1.	1.	1.	1.	1.	1.	1.
142	1.	1.	1.	1.	1.	1.	1.	1.
143	1.	1.	1.	1.	1.	1.	1.	1.
144	1.	1.	1.	1.	1.	1.	1.	1.
145	1.	1.	1.	1.	1.	1.	1.	1.
146	1.	1.	1.	1.	1.	1.	1.	1.
147	1.	1.	1.	1.	1.	1.	1.	1.
148	1.	1.	1.	1.	1.	1.	1.	1.
149	1.	1.	1.	1.	1.	1.	1.	1.
150	1.	1.	1.	1.	1.	1.	1.	1.
151	1.	1.	1.	1.	1.	1.	1.	1.
152	1.	1.	1.	1.	1.	1.	1.	1.
153	1.	1.	1.	1.	1.	1.	1.	1.
154	1.	1.	1.	1.	1.	1.	1.	1.
155	1.	1.	1.	1.	1.	1.	1.	1.
156	1.	1.	1.	1.	1.	1.	1.	1.
157	1.	1.	1.	1.	1.	1.	1.	1.
158	1.	1.	1.	1.	1.	1.	1.	1.
159	1.	1.	1.	1.	1.	1.	1.	1.
160	1.	1.	1.	1.	1.	1.	1.	1.
161	1.	1.	1.	1.	1.	1.	1.	1.
162	1.	1.	1.	1.	1.	1.	1.	1.
163	1.	1.	1.	1.	1.	1.	1.	1.
164	1.	1.	1.	1.	1.	1.	1.	1.
165	1.	1.	1.	1.	1.	1.	1.	1.
166	1.	1.	1.	1.	1.	1.	1.	1.
167	1.	1.	1.	1.	1.	1.	1.	1.
170	1.	1.	1.	1.	1.	1.	1.	1.

Table 15: Frame Property Modifiers, Part 2 of 2

Table 15: Frame Property Modifiers, Part 2 of 2

Frame	EAModifier	EIModifier
1	0.8	0.8
2	0.8	0.8
3	0.8	0.8
4	0.8	0.8
5	0.8	0.8
6	0.8	0.8
7	0.8	0.8
8	0.8	0.8
9	0.8	0.8
10	0.8	0.8
11	0.8	0.8
12	0.8	0.8
13	0.8	0.8
14	0.8	0.8
15	0.8	0.8
16	0.8	0.8
17	0.8	0.8
18	0.8	0.8
19	0.8	0.8
20	0.8	0.8
21	0.8	0.8
22	0.8	0.8
37	0.8	0.8
38	0.8	0.8
40	0.8	0.8
41	0.8	0.8
42	0.8	0.8
43	0.8	0.8
44	0.8	0.8
45	0.8	0.8
46	0.8	0.8
47	0.8	0.8
48	0.8	0.8
49	0.8	0.8
50	0.8	0.8
51	0.8	0.8
52	0.8	0.8
53	0.8	0.8
54	0.8	0.8
55	0.8	0.8
56	0.8	0.8
57	0.8	0.8
58	0.8	0.8
59	0.8	0.8
60	0.8	0.8
61	0.8	0.8
62	0.8	0.8
63	0.8	0.8
110	0.8	0.8
111	0.8	0.8

Table 15: Frame Property Modifiers, Part 2 of 2

Frame	EAModifier	EIModifier
112	0.8	0.8
113	0.8	0.8
114	0.8	0.8
115	0.8	0.8
116	0.8	0.8
117	0.8	0.8
118	0.8	0.8
119	0.8	0.8
120	0.8	0.8
121	0.8	0.8
122	0.8	0.8
123	0.8	0.8
124	0.8	0.8
125	0.8	0.8
126	0.8	0.8
127	0.8	0.8
128	0.8	0.8
129	0.8	0.8
130	0.8	0.8
131	0.8	0.8
132	0.8	0.8
133	0.8	0.8
134	0.8	0.8
135	0.8	0.8
136	0.8	0.8
137	0.8	0.8
138	0.8	0.8
139	0.8	0.8
140	0.8	0.8
141	0.8	0.8
142	0.8	0.8
143	0.8	0.8
144	0.8	0.8
145	0.8	0.8
146	0.8	0.8
147	0.8	0.8
148	0.8	0.8
149	0.8	0.8
150	0.8	0.8
151	0.8	0.8
152	0.8	0.8
153	0.8	0.8
154	0.8	0.8
155	0.8	0.8
156	0.8	0.8
157	0.8	0.8
158	0.8	0.8
159	0.8	0.8
160	0.8	0.8
161	0.8	0.8
162	0.8	0.8
163	0.8	0.8
164	0.8	0.8

Table 15: Frame Property Modifiers, Part 2 of 2

Frame	EAModifier	EIModifier
165	0.8	0.8
166	0.8	0.8
167	0.8	0.8
170	0.8	0.8
171	0.8	0.8
172	0.8	0.8
173	0.8	0.8
174	0.8	0.8
183	0.8	0.8
184	0.8	0.8
185	0.8	0.8
186	0.8	0.8
187	0.8	0.8
188	0.8	0.8
189	0.8	0.8
190	0.8	0.8
191	0.8	0.8
192	0.8	0.8
193	0.8	0.8
194	0.8	0.8
195	0.8	0.8
208	0.8	0.8
209	0.8	0.8
210	0.8	0.8
211	0.8	0.8
212	0.8	0.8
213	0.8	0.8
214	0.8	0.8
215	0.8	0.8
216	0.8	0.8
217	0.8	0.8
218	0.8	0.8
219	0.8	0.8
220	0.8	0.8
221	0.8	0.8
222	0.8	0.8
223	0.8	0.8
224	0.8	0.8
225	0.8	0.8
226	0.8	0.8
227	0.8	0.8
228	0.8	0.8
229	0.8	0.8
230	0.8	0.8
231	0.8	0.8
233	0.8	0.8
234	0.8	0.8
240	0.8	0.8
241	0.8	0.8
243	0.8	0.8
244	0.8	0.8
246	0.8	0.8
247	0.8	0.8

3.2. Areas

Table 16: Area Section Properties, Part 1 of 3

Table 16: Area Section Properties, Part 1 of 3

Section	Material	AreaType	Type	DrillDOF	Thickness	BendThick	F11Mod
					m	m	
ENTABLADO	A36	Shell	Membrane	Yes	0.01	0.01	1.

Table 16: Area Section Properties, Part 2 of 3

Table 16: Area Section Properties, Part 2 of 3

Section	F22Mod	F12Mod	M11Mod	M22Mod	M12Mod	V13Mod	V23Mod
ENTABLADO	1.	1.	1.	1.	1.	1.	1.

Table 16: Area Section Properties, Part 3 of 3

Table 16: Area Section Properties, Part 3 of 3

Section	MMod	WMod
ENTABLADO	1.	1.

4. Load patterns

This section provides loading information as applied to the model.

4.1. Definitions

Table 18: Load Pattern Definitions

Table 18: Load Pattern Definitions

LoadPat	DesignType	SelfWtMult	AutoLoad
DEAD	Dead	1.	
LIVE	Live	0.	
SX	Quake	0.	None
SY	Quake	0.	None
WB	Wind	0.	None

5. Load cases

This section provides load case information.

5.1. Definitions

Table 19: Load Case Definitions, Part 1 of 2

Table 19: Load Case Definitions, Part 1 of 2

Case	Type	InitialCond	ModalCase	BaseCase	MassSource	DesActOpt
DEAD	LinStatic	Zero				Prog Det
MODAL	LinModal	Zero				Prog Det
LIVE	LinStatic	Zero				Prog Det
SX	LinRespSpec		MODAL			Prog Det
SY	LinRespSpec		MODAL			Prog Det
WB	LinStatic	Zero				Prog Det

Table 19: Load Case Definitions, Part 2 of 2

Table 19: Load Case Definitions, Part 2 of 2

Case	DesignAct
DEAD	Non-Composite
MODAL	Other
LIVE	Short-Term Composite
SX	Short-Term Composite
SY	Short-Term Composite
WB	Short-Term Composite

5.2. Static case load assignments

Table 20: Case - Static 1 - Load Assignments

Table 20: Case - Static 1 - Load Assignments

Case	LoadType	LoadName	LoadSF
DEAD	Load pattern	DEAD	1.
LIVE	Load pattern	LIVE	1.
WB	Load pattern	WB	1.

5.3. Response spectrum case load assignments

Table 21: Case - Response Spectrum 1 - General, Part 1 of 2

Table 21: Case - Response Spectrum 1 - General, Part 1 of 2

Case	ModalCombo	GMCf1	GMCf2	PerRigid	DirCombo	MotionType	DampingType
		Cyc/sec	Cyc/sec				
SX	CQC	1.0000E+00	0.0000E+00	SRSS	SRSS	Acceleration	Constant
SY	CQC	1.0000E+00	0.0000E+00	SRSS	SRSS	Acceleration	Constant

Table 21: Case - Response Spectrum 1 - General, Part 2 of 2

Table 21: Case - Response Spectrum 1 - General, Part 2 of 2

Case	ConstDamp
SX	0.05
SY	0.05

Table 22: Case - Response Spectrum 2 - Load Assignments

Table 22: Case - Response Spectrum 2 - Load Assignments

Case	LoadType	LoadName	CoordSys	Function	Angle	TransAccSF
					Degrees	m/sec2
SX	Acceleration	U1	GLOBAL	SOGAMOSO NSR-10	0.	1.401
SY	Acceleration	U2	GLOBAL	SOGAMOSO NSR-10	0.	1.401

Table 23: Function - Response Spectrum - User

Table 23: Function - Response Spectrum - User

Name	Period	Accel	FuncDamp
	Sec		
UNIFRS	0.	1.	0.05
UNIFRS	1.	1.	
SOGAMOSO NSR-10	0.	0.9969	0.05
SOGAMOSO NSR-10	0.1	0.9969	
SOGAMOSO NSR-10	0.2	0.9969	
SOGAMOSO NSR-10	0.3	0.9969	
SOGAMOSO NSR-10	0.4	0.9969	
SOGAMOSO NSR-10	0.5	0.9969	
SOGAMOSO NSR-10	0.6	0.9969	
SOGAMOSO NSR-10	0.7	0.9969	
SOGAMOSO NSR-10	0.8	0.9969	
SOGAMOSO NSR-10	0.9	0.9969	
SOGAMOSO NSR-10	1.	0.99	
SOGAMOSO NSR-10	1.2	0.825	
SOGAMOSO NSR-10	1.5	0.66	
SOGAMOSO NSR-10	1.7	0.5824	
SOGAMOSO NSR-10	2.	0.495	
SOGAMOSO NSR-10	2.5	0.396	
SOGAMOSO NSR-10	3.	0.33	
SOGAMOSO NSR-10	3.5	0.2829	
SOGAMOSO NSR-10	4.	0.2475	
SOGAMOSO NSR-10	5.	0.198	

Table 23: Function - Response Spectrum - User

Name	Period	Accel	FuncDamp
	Sec		
SOGAMOSO NSR-10	8.	0.1114	
SOGAMOSO NSR-10	11.	0.0589	
SOGAMOSO NSR-10	15.	0.0317	

6. Load combinations

This section provides load combination information.

Table 24: Combination Definitions

Table 24: Combination Definitions

ComboName	ComboType	CaseName	ScaleFactor
UDSTL1	Linear Add	DEAD	1.4
UDSTL2	Linear Add	DEAD	1.2
UDSTL2		LIVE	1.6
UDSTL3	Linear Add	DEAD	1.2
UDSTL3		LIVE	1.
UDSTL3		WB	1.
UDSTL4	Linear Add	DEAD	1.2
UDSTL4		LIVE	1.
UDSTL4		WB	-1.
UDSTL5	Linear Add	DEAD	0.9
UDSTL5		WB	1.
UDSTL6	Linear Add	DEAD	0.9
UDSTL6		WB	-1.
UDSTL7	Linear Add	DEAD	1.3
UDSTL7		LIVE	1.
UDSTL7		SX	1.
UDSTL8	Linear Add	DEAD	1.3
UDSTL8		LIVE	1.
UDSTL8		SY	1.
UDSTL9	Linear Add	DEAD	0.8
UDSTL9		SX	1.
UDSTL10	Linear Add	DEAD	0.8
UDSTL10		SY	1.
UDSTL11	Linear Add	DEAD	1.
UDSTL12	Linear Add	DEAD	1.
UDSTL12		LIVE	1.
DSTL1	Linear Add	DEAD	1.4
DSTL2	Linear Add	DEAD	1.2
DSTL2		LIVE	1.6
DSTL3	Linear Add	DEAD	1.2
DSTL3		LIVE	1.
DSTL3		WB	1.
DSTL4	Linear Add	DEAD	1.2
DSTL4		LIVE	1.
DSTL4		WB	-1.
DSTL5	Linear Add	DEAD	0.9
DSTL5		WB	1.
DSTL6	Linear Add	DEAD	0.9

Table 24: Combination Definitions

ComboName	ComboType	CaseName	ScaleFactor
DSTL6		WB	-1.
DSTL7	Linear Add	DEAD	1.3
DSTL7		LIVE	1.
DSTL7		SX	1.
DSTL8	Linear Add	DEAD	1.3
DSTL8		LIVE	1.
DSTL8		SY	1.
DSTL9	Linear Add	DEAD	0.8
DSTL9		SX	1.
DSTL10	Linear Add	DEAD	0.8
DSTL10		SY	1.
DSTL11	Linear Add	DEAD	1.
DSTL12	Linear Add	DEAD	1.
DSTL12		LIVE	1.

7. Structure results

This section provides structure results, including items such as structural periods and base reactions.

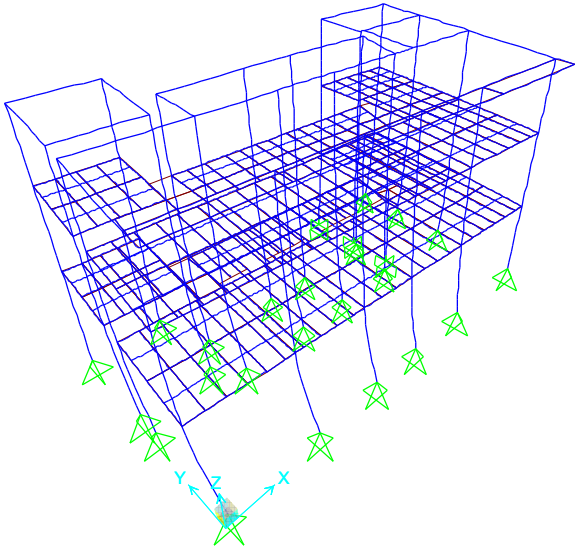

Figure 2: Deformed shape

7.1. Mass summary

Table 25: Assembled Joint Masses, Part 1 of 2

Table 25: Assembled Joint Masses, Part 1 of 2

Joint	MassSource	U1	U2	U3	R1	R2	R3	CenterX
		Kgf-s2/m	Kgf-s2/m	Kgf-s2/m	Kgf-m-s2	Kgf-m-s2	Kgf-m-s2	m
1	MSSSRC1	37.86	37.86	37.86	0.	0.	0.	0.37992
2	MSSSRC1	83.41	83.41	83.41	0.	0.	0.	0.37992
3	MSSSRC1	37.86	37.86	37.86	0.	0.	0.	0.37992
4	MSSSRC1	83.61	83.61	83.61	0.	0.	0.	0.37992
5	MSSSRC1	37.86	37.86	37.86	0.	0.	0.	0.37992
6	MSSSRC1	84.4	84.4	84.4	0.	0.	0.	0.37992
7	MSSSRC1	37.86	37.86	37.86	0.	0.	0.	0.37992
8	MSSSRC1	84.44	84.44	84.44	0.	0.	0.	0.37992
9	MSSSRC1	37.86	37.86	37.86	0.	0.	0.	5.37992
10	MSSSRC1	84.16	84.16	84.16	0.	0.	0.	5.37992
11	MSSSRC1	37.86	37.86	37.86	0.	0.	0.	5.37992
12	MSSSRC1	87.84	87.84	87.84	0.	0.	0.	5.37992

Table 25: Assembled Joint Masses, Part 1 of 2

Joint	MassSource	U1	U2	U3	R1	R2	R3	CenterX
		Kgf-s2/m	Kgf-s2/m	Kgf-s2/m	Kgf-m-s2	Kgf-m-s2	Kgf-m-s2	m
13	MSSSRC1	37.86	37.86	37.86	0.	0.	0.	4.18644
14	MSSSRC1	100.02	100.02	100.02	0.	0.	0.	4.18644
15	MSSSRC1	37.86	37.86	37.86	0.	0.	0.	5.22433
16	MSSSRC1	84.09	84.09	84.09	0.	0.	0.	5.22433
17	MSSSRC1	37.86	37.86	37.86	0.	0.	0.	4.18644
18	MSSSRC1	84.41	84.41	84.41	0.	0.	0.	4.18644
19	MSSSRC1	37.86	37.86	37.86	0.	0.	0.	9.4166
20	MSSSRC1	76.35	76.35	76.35	0.	0.	0.	9.4166
21	MSSSRC1	37.86	37.86	37.86	0.	0.	0.	11.96517
22	MSSSRC1	75.77	75.77	75.77	0.	0.	0.	11.96517
23	MSSSRC1	37.86	37.86	37.86	0.	0.	0.	12.15009
24	MSSSRC1	91.74	91.74	91.74	0.	0.	0.	12.15009
25	MSSSRC1	37.86	37.86	37.86	0.	0.	0.	9.17992
26	MSSSRC1	90.48	90.48	90.48	0.	0.	0.	9.17992
27	MSSSRC1	37.86	37.86	37.86	0.	0.	0.	9.17992
28	MSSSRC1	90.53	90.53	90.53	0.	0.	0.	9.17992
29	MSSSRC1	37.86	37.86	37.86	0.	0.	0.	12.15009
30	MSSSRC1	92.69	92.69	92.69	0.	0.	0.	12.15009
31	MSSSRC1	37.86	37.86	37.86	0.	0.	0.	15.75009
32	MSSSRC1	91.33	91.33	91.33	0.	0.	0.	15.75009
33	MSSSRC1	37.86	37.86	37.86	0.	0.	0.	20.90009
34	MSSSRC1	81.99	81.99	81.99	0.	0.	0.	20.90009
35	MSSSRC1	37.86	37.86	37.86	0.	0.	0.	21.11374
36	MSSSRC1	92.48	92.48	92.48	0.	0.	0.	21.11374
37	MSSSRC1	37.86	37.86	37.86	0.	0.	0.	21.11374
38	MSSSRC1	91.82	91.82	91.82	0.	0.	0.	21.11374
39	MSSSRC1	37.86	37.86	37.86	0.	0.	0.	21.09355
40	MSSSRC1	82.94	82.94	82.94	0.	0.	0.	21.09355
41	MSSSRC1	37.86	37.86	37.86	0.	0.	0.	15.75009
42	MSSSRC1	93.69	93.69	93.69	0.	0.	0.	15.75009
43	MSSSRC1	37.86	37.86	37.86	0.	0.	0.	16.33083
44	MSSSRC1	86.6	86.6	86.6	0.	0.	0.	16.33083
45	MSSSRC1	113.05	113.05	113.05	0.	0.	0.	16.75514
46	MSSSRC1	153.61	153.61	153.61	0.	0.	0.	16.75514
47	MSSSRC1	113.05	113.05	113.05	0.	0.	0.	16.75514
48	MSSSRC1	273.01	273.01	273.01	0.	0.	0.	16.75514
49	MSSSRC1	72.36	72.36	72.36	0.	0.	0.	16.53787
50	MSSSRC1	185.71	185.71	185.71	0.	0.	0.	16.53787
51	MSSSRC1	14.65	14.65	14.65	0.	0.	0.	4.18644
52	MSSSRC1	4.08	4.08	4.08	0.	0.	0.	6.0056
53	MSSSRC1	13.9	13.9	13.9	0.	0.	0.	6.0056
54	MSSSRC1	12.12	12.12	12.12	0.	0.	0.	6.0056
55	MSSSRC1	18.25	18.25	18.25	0.	0.	0.	0.37992
56	MSSSRC1	25.36	25.36	25.36	0.	0.	0.	1.31492
57	MSSSRC1	24.95	24.95	24.95	0.	0.	0.	2.21492
58	MSSSRC1	24.95	24.95	24.95	0.	0.	0.	3.11492
59	MSSSRC1	24.95	24.95	24.95	0.	0.	0.	4.01492
60	MSSSRC1	19.87	19.87	19.87	0.	0.	0.	4.91492
61	MSSSRC1	17.84	17.84	17.84	0.	0.	0.	5.37992
62	MSSSRC1	19.52	19.52	19.52	0.	0.	0.	5.81492
63	MSSSRC1	24.95	24.95	24.95	0.	0.	0.	6.71492
64	MSSSRC1	24.95	24.95	24.95	0.	0.	0.	7.61492
65	MSSSRC1	22.21	22.21	22.21	0.	0.	0.	8.51492
66	MSSSRC1	27.18	27.18	27.18	0.	0.	0.	9.17992

Table 25: Assembled Joint Masses, Part 1 of 2

Joint	MassSource	U1	U2	U3	R1	R2	R3	CenterX
		Kgf-s2/m	Kgf-s2/m	Kgf-s2/m	Kgf-m-s2	Kgf-m-s2	Kgf-m-s2	m
67	MSSSRC1	26.52	26.52	26.52	0.	0.	0.	10.215
68	MSSSRC1	26.52	26.52	26.52	0.	0.	0.	11.115
69	MSSSRC1	30.33	30.33	30.33	0.	0.	0.	12.15009
70	MSSSRC1	25.36	25.36	25.36	0.	0.	0.	13.08509
71	MSSSRC1	24.95	24.95	24.95	0.	0.	0.	13.98509
72	MSSSRC1	24.54	24.54	24.54	0.	0.	0.	14.88509
73	MSSSRC1	28.34	28.34	28.34	0.	0.	0.	15.75009
74	MSSSRC1	25.37	25.37	25.37	0.	0.	0.	16.68509
75	MSSSRC1	24.98	24.98	24.98	0.	0.	0.	17.58509
76	MSSSRC1	25.	25.	25.	0.	0.	0.	18.48509
77	MSSSRC1	25.01	25.01	25.01	0.	0.	0.	19.38509
78	MSSSRC1	22.94	22.94	22.94	0.	0.	0.	20.28509
79	MSSSRC1	15.81	15.81	15.81	0.	0.	0.	21.0066
80	MSSSRC1	16.6	16.6	16.6	0.	0.	0.	1.31492
81	MSSSRC1	16.32	16.32	16.32	0.	0.	0.	2.21492
82	MSSSRC1	16.32	16.32	16.32	0.	0.	0.	3.11492
83	MSSSRC1	16.32	16.32	16.32	0.	0.	0.	4.01492
84	MSSSRC1	12.86	12.86	12.86	0.	0.	0.	4.91492
85	MSSSRC1	12.62	12.62	12.62	0.	0.	0.	5.81492
86	MSSSRC1	16.32	16.32	16.32	0.	0.	0.	6.71492
87	MSSSRC1	16.32	16.32	16.32	0.	0.	0.	7.61492
88	MSSSRC1	14.45	14.45	14.45	0.	0.	0.	8.51492
89	MSSSRC1	17.4	17.4	17.4	0.	0.	0.	10.215
90	MSSSRC1	17.4	17.4	17.4	0.	0.	0.	11.115
91	MSSSRC1	16.6	16.6	16.6	0.	0.	0.	13.08509
92	MSSSRC1	16.32	16.32	16.32	0.	0.	0.	13.98509
93	MSSSRC1	16.05	16.05	16.05	0.	0.	0.	14.88509
94	MSSSRC1	16.6	16.6	16.6	0.	0.	0.	16.68509
95	MSSSRC1	16.32	16.32	16.32	0.	0.	0.	17.58509
96	MSSSRC1	16.32	16.32	16.32	0.	0.	0.	18.48509
97	MSSSRC1	16.32	16.32	16.32	0.	0.	0.	19.38509
98	MSSSRC1	14.23	14.23	14.23	0.	0.	0.	20.28509
99	MSSSRC1	15.87	15.87	15.87	0.	0.	0.	1.31492
100	MSSSRC1	14.35	14.35	14.35	0.	0.	0.	2.21492
101	MSSSRC1	16.28	16.28	16.28	0.	0.	0.	3.11492
102	MSSSRC1	14.16	14.16	14.16	0.	0.	0.	4.01492
103	MSSSRC1	12.32	12.32	12.32	0.	0.	0.	4.91492
104	MSSSRC1	12.58	12.58	12.58	0.	0.	0.	5.81492
105	MSSSRC1	14.16	14.16	14.16	0.	0.	0.	6.71492
106	MSSSRC1	14.18	14.18	14.18	0.	0.	0.	7.61492
107	MSSSRC1	13.4	13.4	13.4	0.	0.	0.	8.51492
108	MSSSRC1	15.11	15.11	15.11	0.	0.	0.	10.215
109	MSSSRC1	14.86	14.86	14.86	0.	0.	0.	11.115
110	MSSSRC1	16.56	16.56	16.56	0.	0.	0.	13.08509
111	MSSSRC1	16.28	16.28	16.28	0.	0.	0.	13.98509
112	MSSSRC1	16.	16.	16.	0.	0.	0.	14.88509
113	MSSSRC1	12.58	12.58	12.58	0.	0.	0.	16.68509
114	MSSSRC1	18.25	18.25	18.25	0.	0.	0.	17.58509
115	MSSSRC1	17.68	17.68	17.68	0.	0.	0.	18.48509
116	MSSSRC1	17.67	17.67	17.67	0.	0.	0.	19.38509
117	MSSSRC1	16.44	16.44	16.44	0.	0.	0.	20.28509
118	MSSSRC1	10.83	10.83	10.83	0.	0.	0.	1.97969
119	MSSSRC1	5.81	5.81	5.81	0.	0.	0.	6.88536
120	MSSSRC1	5.81	5.81	5.81	0.	0.	0.	7.96236

Table 25: Assembled Joint Masses, Part 1 of 2

Joint	MassSource	U1	U2	U3	R1	R2	R3	CenterX
		Kgf-s2/m	Kgf-s2/m	Kgf-s2/m	Kgf-m-s2	Kgf-m-s2	Kgf-m-s2	m
121	MSSSRC1	5.63	5.63	5.63	0.	0.	0.	10.34433
122	MSSSRC1	6.2	6.2	6.2	0.	0.	0.	11.42133
123	MSSSRC1	15.27	15.27	15.27	0.	0.	0.	1.31492
124	MSSSRC1	15.01	15.01	15.01	0.	0.	0.	2.21492
125	MSSSRC1	16.27	16.27	16.27	0.	0.	0.	3.11492
126	MSSSRC1	11.56	11.56	11.56	0.	0.	0.	0.37992
127	MSSSRC1	14.69	14.69	14.69	0.	0.	0.	1.31492
128	MSSSRC1	10.83	10.83	10.83	0.	0.	0.	1.97969
129	MSSSRC1	13.18	13.18	13.18	0.	0.	0.	2.21492
130	MSSSRC1	16.38	16.38	16.38	0.	0.	0.	3.11492
131	MSSSRC1	11.71	11.71	11.71	0.	0.	0.	4.18644
132	MSSSRC1	18.13	18.13	18.13	0.	0.	0.	1.31492
133	MSSSRC1	17.82	17.82	17.82	0.	0.	0.	2.21492
134	MSSSRC1	19.35	19.35	19.35	0.	0.	0.	3.11492
135	MSSSRC1	16.11	16.11	16.11	0.	0.	0.	5.31406
136	MSSSRC1	18.23	18.23	18.23	0.	0.	0.	6.88536
137	MSSSRC1	17.45	17.45	17.45	0.	0.	0.	7.96236
138	MSSSRC1	14.55	14.55	14.55	0.	0.	0.	8.73378
139	MSSSRC1	14.12	14.12	14.12	0.	0.	0.	9.63378
140	MSSSRC1	16.03	16.03	16.03	0.	0.	0.	10.34433
141	MSSSRC1	17.15	17.15	17.15	0.	0.	0.	11.42133
142	MSSSRC1	15.49	15.49	15.49	0.	0.	0.	12.15009
143	MSSSRC1	15.72	15.72	15.72	0.	0.	0.	13.08509
144	MSSSRC1	15.47	15.47	15.47	0.	0.	0.	13.98509
145	MSSSRC1	17.23	17.23	17.23	0.	0.	0.	14.88509
146	MSSSRC1	15.64	15.64	15.64	0.	0.	0.	15.99591
147	MSSSRC1	119.09	119.09	119.09	0.	0.	0.	16.75514
148	MSSSRC1	29.5	29.5	29.5	0.	0.	0.	20.28509
149	MSSSRC1	16.1	16.1	16.1	0.	0.	0.	20.28509
150	MSSSRC1	30.66	30.66	30.66	0.	0.	0.	19.38509
151	MSSSRC1	10.33	10.33	10.33	0.	0.	0.	19.38509
152	MSSSRC1	30.7	30.7	30.7	0.	0.	0.	18.48509
153	MSSSRC1	10.34	10.34	10.34	0.	0.	0.	18.48509
154	MSSSRC1	28.88	28.88	28.88	0.	0.	0.	17.58509
155	MSSSRC1	11.21	11.21	11.21	0.	0.	0.	17.58509
156	MSSSRC1	75.8	75.8	75.8	0.	0.	0.	0.37992
157	MSSSRC1	75.8	75.8	75.8	0.	0.	0.	0.37992
158	MSSSRC1	76.81	76.81	76.81	0.	0.	0.	4.18644
159	MSSSRC1	92.21	92.21	92.21	0.	0.	0.	4.18644
160	MSSSRC1	76.44	76.44	76.44	0.	0.	0.	5.22433
161	MSSSRC1	76.78	76.78	76.78	0.	0.	0.	0.37992
162	MSSSRC1	80.19	80.19	80.19	0.	0.	0.	5.37992
163	MSSSRC1	76.83	76.83	76.83	0.	0.	0.	0.37992
164	MSSSRC1	76.55	76.55	76.55	0.	0.	0.	5.37992
165	MSSSRC1	82.92	82.92	82.92	0.	0.	0.	9.17992
166	MSSSRC1	85.07	85.07	85.07	0.	0.	0.	12.15009
167	MSSSRC1	83.72	83.72	83.72	0.	0.	0.	15.75009
168	MSSSRC1	74.38	74.38	74.38	0.	0.	0.	20.90009
169	MSSSRC1	81.24	81.24	81.24	0.	0.	0.	21.11374
170	MSSSRC1	82.26	82.26	82.26	0.	0.	0.	21.11374
171	MSSSRC1	75.27	75.27	75.27	0.	0.	0.	21.09355
172	MSSSRC1	77.23	77.23	77.23	0.	0.	0.	16.53787
173	MSSSRC1	74.22	74.22	74.22	0.	0.	0.	16.75514
174	MSSSRC1	79.91	79.91	79.91	0.	0.	0.	16.33083

Table 25: Assembled Joint Masses, Part 1 of 2

Joint	MassSource	U1	U2	U3	R1	R2	R3	CenterX
		Kgf-s2/m	Kgf-s2/m	Kgf-s2/m	Kgf-m-s2	Kgf-m-s2	Kgf-m-s2	m
175	MSSSRC1	68.12	68.12	68.12	0.	0.	0.	11.96517
176	MSSSRC1	68.7	68.7	68.7	0.	0.	0.	9.4166
177	MSSSRC1	82.86	82.86	82.86	0.	0.	0.	9.17992
178	MSSSRC1	84.12	84.12	84.12	0.	0.	0.	12.15009
179	MSSSRC1	84.54	84.54	84.54	0.	0.	0.	15.75009
180	MSSSRC1	14.65	14.65	14.65	0.	0.	0.	4.18644
181	MSSSRC1	4.09	4.09	4.09	0.	0.	0.	6.0056
182	MSSSRC1	13.91	13.91	13.91	0.	0.	0.	6.0056
183	MSSSRC1	12.12	12.12	12.12	0.	0.	0.	6.0056
184	MSSSRC1	18.18	18.18	18.18	0.	0.	0.	0.37992
185	MSSSRC1	25.32	25.32	25.32	0.	0.	0.	1.31492
186	MSSSRC1	24.91	24.91	24.91	0.	0.	0.	2.21492
187	MSSSRC1	24.91	24.91	24.91	0.	0.	0.	3.11492
188	MSSSRC1	24.91	24.91	24.91	0.	0.	0.	4.01492
189	MSSSRC1	19.84	19.84	19.84	0.	0.	0.	4.91492
190	MSSSRC1	17.77	17.77	17.77	0.	0.	0.	5.37992
191	MSSSRC1	19.49	19.49	19.49	0.	0.	0.	5.81492
192	MSSSRC1	24.91	24.91	24.91	0.	0.	0.	6.71492
193	MSSSRC1	24.91	24.91	24.91	0.	0.	0.	7.61492
194	MSSSRC1	22.17	22.17	22.17	0.	0.	0.	8.51492
195	MSSSRC1	27.11	27.11	27.11	0.	0.	0.	9.17992
196	MSSSRC1	26.49	26.49	26.49	0.	0.	0.	10.215
197	MSSSRC1	26.49	26.49	26.49	0.	0.	0.	11.115
198	MSSSRC1	30.26	30.26	30.26	0.	0.	0.	12.15009
199	MSSSRC1	25.32	25.32	25.32	0.	0.	0.	13.08509
200	MSSSRC1	24.91	24.91	24.91	0.	0.	0.	13.98509
201	MSSSRC1	24.5	24.5	24.5	0.	0.	0.	14.88509
202	MSSSRC1	28.27	28.27	28.27	0.	0.	0.	15.75009
203	MSSSRC1	25.33	25.33	25.33	0.	0.	0.	16.68509
204	MSSSRC1	24.93	24.93	24.93	0.	0.	0.	17.58509
205	MSSSRC1	24.95	24.95	24.95	0.	0.	0.	18.48509
206	MSSSRC1	24.96	24.96	24.96	0.	0.	0.	19.38509
207	MSSSRC1	22.89	22.89	22.89	0.	0.	0.	20.28509
208	MSSSRC1	15.72	15.72	15.72	0.	0.	0.	21.0066
209	MSSSRC1	16.63	16.63	16.63	0.	0.	0.	1.31492
210	MSSSRC1	16.35	16.35	16.35	0.	0.	0.	2.21492
211	MSSSRC1	16.35	16.35	16.35	0.	0.	0.	3.11492
212	MSSSRC1	16.35	16.35	16.35	0.	0.	0.	4.01492
213	MSSSRC1	12.88	12.88	12.88	0.	0.	0.	4.91492
214	MSSSRC1	12.64	12.64	12.64	0.	0.	0.	5.81492
215	MSSSRC1	16.35	16.35	16.35	0.	0.	0.	6.71492
216	MSSSRC1	16.35	16.35	16.35	0.	0.	0.	7.61492
217	MSSSRC1	14.47	14.47	14.47	0.	0.	0.	8.51492
218	MSSSRC1	17.42	17.42	17.42	0.	0.	0.	10.215
219	MSSSRC1	17.42	17.42	17.42	0.	0.	0.	11.115
220	MSSSRC1	16.63	16.63	16.63	0.	0.	0.	13.08509
221	MSSSRC1	16.35	16.35	16.35	0.	0.	0.	13.98509
222	MSSSRC1	16.07	16.07	16.07	0.	0.	0.	14.88509
223	MSSSRC1	16.63	16.63	16.63	0.	0.	0.	16.68509
224	MSSSRC1	16.35	16.35	16.35	0.	0.	0.	17.58509
225	MSSSRC1	16.35	16.35	16.35	0.	0.	0.	18.48509
226	MSSSRC1	16.35	16.35	16.35	0.	0.	0.	19.38509
227	MSSSRC1	14.26	14.26	14.26	0.	0.	0.	20.28509
228	MSSSRC1	15.89	15.89	15.89	0.	0.	0.	1.31492

Table 25: Assembled Joint Masses, Part 1 of 2

Joint	MassSource	U1	U2	U3	R1	R2	R3	CenterX
		Kgf-s2/m	Kgf-s2/m	Kgf-s2/m	Kgf-m-s2	Kgf-m-s2	Kgf-m-s2	m
229	MSSSRC1	14.36	14.36	14.36	0.	0.	0.	2.21492
230	MSSSRC1	16.3	16.3	16.3	0.	0.	0.	3.11492
231	MSSSRC1	14.18	14.18	14.18	0.	0.	0.	4.01492
232	MSSSRC1	12.34	12.34	12.34	0.	0.	0.	4.91492
233	MSSSRC1	12.6	12.6	12.6	0.	0.	0.	5.81492
234	MSSSRC1	14.17	14.17	14.17	0.	0.	0.	6.71492
235	MSSSRC1	14.19	14.19	14.19	0.	0.	0.	7.61492
236	MSSSRC1	13.42	13.42	13.42	0.	0.	0.	8.51492
237	MSSSRC1	15.13	15.13	15.13	0.	0.	0.	10.215
238	MSSSRC1	14.87	14.87	14.87	0.	0.	0.	11.115
239	MSSSRC1	16.57	16.57	16.57	0.	0.	0.	13.08509
240	MSSSRC1	16.3	16.3	16.3	0.	0.	0.	13.98509
241	MSSSRC1	16.02	16.02	16.02	0.	0.	0.	14.88509
242	MSSSRC1	8.36	8.36	8.36	0.	0.	0.	16.68509
243	MSSSRC1	9.95	9.95	9.95	0.	0.	0.	17.58509
244	MSSSRC1	11.91	11.91	11.91	0.	0.	0.	18.48509
245	MSSSRC1	11.91	11.91	11.91	0.	0.	0.	19.38509
246	MSSSRC1	14.89	14.89	14.89	0.	0.	0.	20.28509
247	MSSSRC1	10.83	10.83	10.83	0.	0.	0.	1.97969
248	MSSSRC1	5.81	5.81	5.81	0.	0.	0.	6.88536
249	MSSSRC1	5.81	5.81	5.81	0.	0.	0.	7.96236
250	MSSSRC1	5.81	5.81	5.81	0.	0.	0.	10.34433
251	MSSSRC1	6.2	6.2	6.2	0.	0.	0.	11.42133
252	MSSSRC1	15.29	15.29	15.29	0.	0.	0.	1.31492
253	MSSSRC1	15.03	15.03	15.03	0.	0.	0.	2.21492
254	MSSSRC1	16.3	16.3	16.3	0.	0.	0.	3.11492
255	MSSSRC1	14.48	14.48	14.48	0.	0.	0.	0.37992
256	MSSSRC1	14.61	14.61	14.61	0.	0.	0.	1.31492
257	MSSSRC1	10.83	10.83	10.83	0.	0.	0.	1.97969
258	MSSSRC1	13.1	13.1	13.1	0.	0.	0.	2.21492
259	MSSSRC1	16.3	16.3	16.3	0.	0.	0.	3.11492
260	MSSSRC1	15.61	15.61	15.61	0.	0.	0.	4.18644
261	MSSSRC1	22.78	22.78	22.78	0.	0.	0.	1.31492
262	MSSSRC1	22.41	22.41	22.41	0.	0.	0.	2.21492
263	MSSSRC1	24.21	24.21	24.21	0.	0.	0.	3.11492
264	MSSSRC1	16.15	16.15	16.15	0.	0.	0.	5.31406
265	MSSSRC1	18.23	18.23	18.23	0.	0.	0.	6.88536
266	MSSSRC1	17.45	17.45	17.45	0.	0.	0.	7.96236
267	MSSSRC1	14.55	14.55	14.55	0.	0.	0.	8.73378
268	MSSSRC1	14.12	14.12	14.12	0.	0.	0.	9.63378
269	MSSSRC1	17.02	17.02	17.02	0.	0.	0.	10.34433
270	MSSSRC1	17.15	17.15	17.15	0.	0.	0.	11.42133
271	MSSSRC1	14.5	14.5	14.5	0.	0.	0.	12.15009
272	MSSSRC1	15.72	15.72	15.72	0.	0.	0.	13.08509
273	MSSSRC1	15.47	15.47	15.47	0.	0.	0.	13.98509
274	MSSSRC1	17.23	17.23	17.23	0.	0.	0.	14.88509
275	MSSSRC1	21.29	21.29	21.29	0.	0.	0.	15.99591
276	MSSSRC1	3.25	3.25	3.25	0.	0.	0.	0.37992
277	MSSSRC1	3.25	3.25	3.25	0.	0.	0.	4.18644
278	MSSSRC1	25.5	25.5	25.5	0.	0.	0.	20.28509
279	MSSSRC1	16.09	16.09	16.09	0.	0.	0.	20.28509
280	MSSSRC1	26.48	26.48	26.48	0.	0.	0.	19.38509
281	MSSSRC1	16.87	16.87	16.87	0.	0.	0.	19.38509
282	MSSSRC1	26.51	26.51	26.51	0.	0.	0.	18.48509

Table 25: Assembled Joint Masses, Part 1 of 2

Joint	MassSource	U1	U2	U3	R1	R2	R3	CenterX
		Kgf-s2/m	Kgf-s2/m	Kgf-s2/m	Kgf-m-s2	Kgf-m-s2	Kgf-m-s2	m
283	MSSSRC1	16.89	16.89	16.89	0.	0.	0.	18.48509
284	MSSSRC1	23.85	23.85	23.85	0.	0.	0.	17.58509
285	MSSSRC1	17.78	17.78	17.78	0.	0.	0.	17.58509
286	MSSSRC1	64.82	64.82	64.82	0.	0.	0.	0.37992
287	MSSSRC1	64.82	64.82	64.82	0.	0.	0.	4.18644
288	MSSSRC1	64.82	64.82	64.82	0.	0.	0.	0.37992
289	MSSSRC1	64.82	64.82	64.82	0.	0.	0.	4.18644
290	MSSSRC1	52.51	52.51	52.51	0.	0.	0.	5.22433
291	MSSSRC1	51.75	51.75	51.75	0.	0.	0.	16.53787
292	MSSSRC1	51.63	51.63	51.63	0.	0.	0.	21.09355
293	MSSSRC1	60.22	60.22	60.22	0.	0.	0.	21.11374
294	MSSSRC1	39.08	39.08	39.08	0.	0.	0.	16.75514
295	MSSSRC1	66.82	66.82	66.82	0.	0.	0.	21.11374
296	MSSSRC1	72.65	72.65	72.65	0.	0.	0.	20.90009
297	MSSSRC1	53.	53.	53.	0.	0.	0.	9.4166
298	MSSSRC1	53.59	53.59	53.59	0.	0.	0.	11.96517
299	MSSSRC1	63.93	63.93	63.93	0.	0.	0.	5.37992
300	MSSSRC1	75.27	75.27	75.27	0.	0.	0.	15.75009
301	MSSSRC1	64.74	64.74	64.74	0.	0.	0.	12.15009
302	MSSSRC1	65.7	65.7	65.7	0.	0.	0.	9.17992
303	MSSSRC1	75.51	75.51	75.51	0.	0.	0.	5.37992
304	MSSSRC1	71.84	71.84	71.84	0.	0.	0.	0.37992
305	MSSSRC1	59.44	59.44	59.44	0.	0.	0.	0.37992
306	MSSSRC1	53.26	53.26	53.26	0.	0.	0.	16.33083
307	MSSSRC1	52.47	52.47	52.47	0.	0.	0.	15.75009
308	MSSSRC1	49.32	49.32	49.32	0.	0.	0.	12.15009
309	MSSSRC1	49.9	49.9	49.9	0.	0.	0.	9.17992
310	MSSSRC1	22.47	22.47	22.47	0.	0.	0.	16.95576
311	MSSSRC1	25.4	25.4	25.4	0.	0.	0.	16.95576
312	MSSSRC1	23.77	23.77	23.77	0.	0.	0.	20.90009
313	MSSSRC1	38.44	38.44	38.44	0.	0.	0.	15.75009
314	MSSSRC1	29.56	29.56	29.56	0.	0.	0.	12.15009
315	MSSSRC1	30.37	30.37	30.37	0.	0.	0.	9.17992
316	MSSSRC1	38.64	38.64	38.64	0.	0.	0.	5.37992
317	MSSSRC1	23.16	23.16	23.16	0.	0.	0.	0.37992
318	MSSSRC1	14.64	14.64	14.64	0.	0.	0.	6.88536
319	MSSSRC1	13.93	13.93	13.93	0.	0.	0.	7.96236
320	MSSSRC1	13.05	13.05	13.05	0.	0.	0.	10.34433
321	MSSSRC1	13.02	13.02	13.02	0.	0.	0.	11.42133
322	MSSSRC1	4.61	4.61	4.61	0.	0.	0.	13.08509
323	MSSSRC1	13.37	13.37	13.37	0.	0.	0.	13.08509
324	MSSSRC1	0.62	0.62	0.62	0.	0.	0.	12.15009
325	MSSSRC1	10.87	10.87	10.87	0.	0.	0.	12.15009
326	MSSSRC1	4.55	4.55	4.55	0.	0.	0.	13.98509
327	MSSSRC1	13.14	13.14	13.14	0.	0.	0.	13.98509
328	MSSSRC1	4.7	4.7	4.7	0.	0.	0.	14.88509
329	MSSSRC1	16.38	16.38	16.38	0.	0.	0.	14.88509
330	MSSSRC1	4.32	4.32	4.32	0.	0.	0.	8.73378
331	MSSSRC1	11.55	11.55	11.55	0.	0.	0.	8.73378
332	MSSSRC1	4.21	4.21	4.21	0.	0.	0.	9.63378
333	MSSSRC1	9.58	9.58	9.58	0.	0.	0.	9.63378
334	MSSSRC1	14.64	14.64	14.64	0.	0.	0.	6.88536
335	MSSSRC1	13.93	13.93	13.93	0.	0.	0.	7.96236
336	MSSSRC1	13.53	13.53	13.53	0.	0.	0.	10.34433

Table 25: Assembled Joint Masses, Part 1 of 2

Joint	MassSource	U1	U2	U3	R1	R2	R3	CenterX
		Kgf-s2/m	Kgf-s2/m	Kgf-s2/m	Kgf-m-s2	Kgf-m-s2	Kgf-m-s2	m
337	MSSSRC1	13.02	13.02	13.02	0.	0.	0.	11.42133
338	MSSSRC1	4.61	4.61	4.61	0.	0.	0.	13.08509
339	MSSSRC1	13.37	13.37	13.37	0.	0.	0.	13.08509
341	MSSSRC1	10.4	10.4	10.4	0.	0.	0.	12.15009
342	MSSSRC1	4.55	4.55	4.55	0.	0.	0.	13.98509
343	MSSSRC1	13.14	13.14	13.14	0.	0.	0.	13.98509
344	MSSSRC1	4.7	4.7	4.7	0.	0.	0.	14.88509
345	MSSSRC1	16.38	16.38	16.38	0.	0.	0.	14.88509
346	MSSSRC1	4.32	4.32	4.32	0.	0.	0.	8.73378
347	MSSSRC1	11.55	11.55	11.55	0.	0.	0.	8.73378
348	MSSSRC1	4.21	4.21	4.21	0.	0.	0.	9.63378
349	MSSSRC1	9.58	9.58	9.58	0.	0.	0.	9.63378
352	MSSSRC1	4.31	4.31	4.31	0.	0.	0.	12.15009
353	MSSSRC1	18.	18.	18.	0.	0.	0.	17.58531
354	MSSSRC1	20.86	20.86	20.86	0.	0.	0.	18.48509
355	MSSSRC1	20.85	20.85	20.85	0.	0.	0.	19.38509
356	MSSSRC1	20.15	20.15	20.15	0.	0.	0.	20.28531
357	MSSSRC1	14.52	14.52	14.52	0.	0.	0.	21.11391
358	MSSSRC1	6.43	6.43	6.43	0.	0.	0.	17.05514
359	MSSSRC1	18.94	18.94	18.94	0.	0.	0.	17.05514
360	MSSSRC1	4.72	4.72	4.72	0.	0.	0.	17.06078
361	MSSSRC1	3.25	3.25	3.25	0.	0.	0.	0.37992
362	MSSSRC1	1.22	1.22	1.22	0.	0.	0.	4.18644
367	MSSSRC1	6.71	6.71	6.71	0.	0.	0.	16.685
368	MSSSRC1	6.54	6.54	6.54	0.	0.	0.	17.585
369	MSSSRC1	6.56	6.56	6.56	0.	0.	0.	18.485
370	MSSSRC1	6.57	6.57	6.57	0.	0.	0.	19.385
371	MSSSRC1	6.59	6.59	6.59	0.	0.	0.	20.285
373	MSSSRC1	4.62	4.62	4.62	0.	0.	0.	17.58547
374	MSSSRC1	3.92	3.92	3.92	0.	0.	0.	18.48531
375	MSSSRC1	3.91	3.91	3.91	0.	0.	0.	19.38547
380	MSSSRC1	4.09	4.09	4.09	0.	0.	0.	6.88516
381	MSSSRC1	3.9	3.9	3.9	0.	0.	0.	7.96219
382	MSSSRC1	3.79	3.79	3.79	0.	0.	0.	10.34422
383	MSSSRC1	3.82	3.82	3.82	0.	0.	0.	11.42109
384	MSSSRC1	7.68	7.68	7.68	0.	0.	0.	21.11359
385	MSSSRC1	6.14	6.14	6.14	0.	0.	0.	20.285
386	MSSSRC1	4.6	4.6	4.6	0.	0.	0.	5.36325
387	MSSSRC1	7.33	7.33	7.33	0.	0.	0.	15.81219
388	MSSSRC1	5.88	5.88	5.88	0.	0.	0.	17.05514
389	MSSSRC1	5.5	5.5	5.5	0.	0.	0.	17.05935
390	MSSSRC1	6.69	6.69	6.69	0.	0.	0.	16.68484
391	MSSSRC1	6.52	6.52	6.52	0.	0.	0.	17.58469
392	MSSSRC1	12.59	12.59	12.59	0.	0.	0.	18.48484
393	MSSSRC1	12.6	12.6	12.6	0.	0.	0.	19.38484
394	MSSSRC1	12.6	12.6	12.6	0.	0.	0.	20.28469
395	MSSSRC1	3.9	3.9	3.9	0.	0.	0.	7.96234
396	MSSSRC1	3.1	3.1	3.1	0.	0.	0.	10.34438
397	MSSSRC1	4.09	4.09	4.09	0.	0.	0.	6.88531
398	MSSSRC1	5.45	5.45	5.45	0.	0.	0.	12.15031
399	MSSSRC1	3.82	3.82	3.82	0.	0.	0.	11.42141
400	MSSSRC1	6.56	6.56	6.56	0.	0.	0.	17.58469
401	MSSSRC1	6.55	6.55	6.55	0.	0.	0.	18.48469
402	MSSSRC1	6.54	6.54	6.54	0.	0.	0.	19.38484

Table 25: Assembled Joint Masses, Part 1 of 2

Joint	MassSource	U1	U2	U3	R1	R2	R3	CenterX
		Kgf-s2/m	Kgf-s2/m	Kgf-s2/m	Kgf-m-s2	Kgf-m-s2	Kgf-m-s2	m
403	MSSSRC1	6.25	6.25	6.25	0.	0.	0.	19.38509
404	MSSSRC1	6.25	6.25	6.25	0.	0.	0.	18.48509
405	MSSSRC1	4.59	4.59	4.59	0.	0.	0.	5.36269
406	MSSSRC1	5.67	5.67	5.67	0.	0.	0.	17.585
407	MSSSRC1	4.43	4.43	4.43	0.	0.	0.	15.81183
408	MSSSRC1	82.23	82.23	82.23	0.	0.	0.	16.75514
409	MSSSRC1	7.45	7.45	7.45	0.	0.	0.	17.58509
410	MSSSRC1	4.65	4.65	4.65	0.	0.	0.	15.93802
411	MSSSRC1	6.43	6.43	6.43	0.	0.	0.	4.18644
412	MSSSRC1	5.66	5.66	5.66	0.	0.	0.	4.18644
413	MSSSRC1	5.51	5.51	5.51	0.	0.	0.	17.05514
417	MSSSRC1	8.82	8.82	8.82	0.	0.	0.	0.37992
418	MSSSRC1	6.83	6.83	6.83	0.	0.	0.	1.31492
419	MSSSRC1	6.77	6.77	6.77	0.	0.	0.	2.21492
420	MSSSRC1	6.77	6.77	6.77	0.	0.	0.	3.11492
421	MSSSRC1	6.77	6.77	6.77	0.	0.	0.	4.01492
422	MSSSRC1	6.09	6.09	6.09	0.	0.	0.	4.91492
423	MSSSRC1	8.77	8.77	8.77	0.	0.	0.	5.37992
424	MSSSRC1	6.05	6.05	6.05	0.	0.	0.	5.81492
425	MSSSRC1	6.77	6.77	6.77	0.	0.	0.	6.71492
426	MSSSRC1	6.77	6.77	6.77	0.	0.	0.	7.61492
427	MSSSRC1	6.41	6.41	6.41	0.	0.	0.	8.51492
428	MSSSRC1	10.02	10.02	10.02	0.	0.	0.	9.17992
429	MSSSRC1	6.99	6.99	6.99	0.	0.	0.	10.215
430	MSSSRC1	6.99	6.99	6.99	0.	0.	0.	11.115
431	MSSSRC1	10.44	10.44	10.44	0.	0.	0.	12.15009
432	MSSSRC1	6.83	6.83	6.83	0.	0.	0.	13.08509
433	MSSSRC1	6.77	6.77	6.77	0.	0.	0.	13.98509
434	MSSSRC1	6.72	6.72	6.72	0.	0.	0.	14.88509
435	MSSSRC1	10.17	10.17	10.17	0.	0.	0.	15.75009
436	MSSSRC1	6.83	6.83	6.83	0.	0.	0.	16.68509
437	MSSSRC1	6.77	6.77	6.77	0.	0.	0.	17.58509
438	MSSSRC1	6.77	6.77	6.77	0.	0.	0.	18.48509
439	MSSSRC1	6.77	6.77	6.77	0.	0.	0.	19.38509
440	MSSSRC1	6.41	6.41	6.41	0.	0.	0.	20.28509
442	MSSSRC1	8.79	8.79	8.79	0.	0.	0.	0.37992
443	MSSSRC1	6.81	6.81	6.81	0.	0.	0.	1.31492
444	MSSSRC1	6.76	6.76	6.76	0.	0.	0.	2.21492
445	MSSSRC1	6.76	6.76	6.76	0.	0.	0.	3.11492
446	MSSSRC1	6.76	6.76	6.76	0.	0.	0.	4.01492
447	MSSSRC1	6.08	6.08	6.08	0.	0.	0.	4.91492
448	MSSSRC1	8.74	8.74	8.74	0.	0.	0.	5.37992
449	MSSSRC1	6.03	6.03	6.03	0.	0.	0.	5.81492
450	MSSSRC1	6.76	6.76	6.76	0.	0.	0.	6.71492
451	MSSSRC1	6.76	6.76	6.76	0.	0.	0.	7.61492
452	MSSSRC1	6.39	6.39	6.39	0.	0.	0.	8.51492
453	MSSSRC1	9.99	9.99	9.99	0.	0.	0.	9.17992
454	MSSSRC1	6.97	6.97	6.97	0.	0.	0.	10.215
455	MSSSRC1	6.97	6.97	6.97	0.	0.	0.	11.115
456	MSSSRC1	10.41	10.41	10.41	0.	0.	0.	12.15009
457	MSSSRC1	6.81	6.81	6.81	0.	0.	0.	13.08509
458	MSSSRC1	6.76	6.76	6.76	0.	0.	0.	13.98509
459	MSSSRC1	6.7	6.7	6.7	0.	0.	0.	14.88509
460	MSSSRC1	10.15	10.15	10.15	0.	0.	0.	15.75009

Table 25: Assembled Joint Masses, Part 1 of 2

Joint	MassSource	U1	U2	U3	R1	R2	R3	CenterX
		Kgf-s2/m	Kgf-s2/m	Kgf-s2/m	Kgf-m-s2	Kgf-m-s2	Kgf-m-s2	m
461	MSSSRC1	6.81	6.81	6.81	0.	0.	0.	16.68509
462	MSSSRC1	6.77	6.77	6.77	0.	0.	0.	17.58509
463	MSSSRC1	6.77	6.77	6.77	0.	0.	0.	18.48509
464	MSSSRC1	6.78	6.78	6.78	0.	0.	0.	19.38509
465	MSSSRC1	6.59	6.59	6.59	0.	0.	0.	20.28509
471	MSSSRC1	6.37	6.37	6.37	0.	0.	0.	1.31492
472	MSSSRC1	6.31	6.31	6.31	0.	0.	0.	2.21492
473	MSSSRC1	6.58	6.58	6.58	0.	0.	0.	3.11516
474	MSSSRC1	5.85	5.85	5.85	0.	0.	0.	4.18656
475	MSSSRC1	5.64	5.64	5.64	0.	0.	0.	0.37992
476	MSSSRC1	6.37	6.37	6.37	0.	0.	0.	1.31492
477	MSSSRC1	6.31	6.31	6.31	0.	0.	0.	2.21492
478	MSSSRC1	6.58	6.58	6.58	0.	0.	0.	3.11516
479	MSSSRC1	5.85	5.85	5.85	0.	0.	0.	4.18656
480	MSSSRC1	5.64	5.64	5.64	0.	0.	0.	0.37992
481	MSSSRC1	8.41	8.41	8.41	0.	0.	0.	20.95297
482	MSSSRC1	8.62	8.62	8.62	0.	0.	0.	21.05787
483	MSSSRC1	5.76	5.76	5.76	0.	0.	0.	19.38509
484	MSSSRC1	5.76	5.76	5.76	0.	0.	0.	18.48509
485	MSSSRC1	5.76	5.76	5.76	0.	0.	0.	19.38509
486	MSSSRC1	5.77	5.77	5.77	0.	0.	0.	18.48509
487	MSSSRC1	5.62	5.62	5.62	0.	0.	0.	20.28531
488	MSSSRC1	6.7	6.7	6.7	0.	0.	0.	21.10047
489	MSSSRC1	5.64	5.64	5.64	0.	0.	0.	20.28531
490	MSSSRC1	6.77	6.77	6.77	0.	0.	0.	21.10719
491	MSSSRC1	5.88	5.88	5.88	0.	0.	0.	17.58531
492	MSSSRC1	7.24	7.24	7.24	0.	0.	0.	16.61672
493	MSSSRC1	5.77	5.77	5.77	0.	0.	0.	17.58531
494	MSSSRC1	6.7	6.7	6.7	0.	0.	0.	16.68813
495	MSSSRC1	5.13	5.13	5.13	0.	0.	0.	8.73422
496	MSSSRC1	6.35	6.35	6.35	0.	0.	0.	7.96281
497	MSSSRC1	6.52	6.52	6.52	0.	0.	0.	6.88578
498	MSSSRC1	5.04	5.04	5.04	0.	0.	0.	6.00594
499	MSSSRC1	5.84	5.84	5.84	0.	0.	0.	5.26953
500	MSSSRC1	5.04	5.04	5.04	0.	0.	0.	9.63422
501	MSSSRC1	6.26	6.26	6.26	0.	0.	0.	10.34469
502	MSSSRC1	6.29	6.29	6.29	0.	0.	0.	11.42156
503	MSSSRC1	5.12	5.12	5.12	0.	0.	0.	12.15
504	MSSSRC1	5.39	5.39	5.39	0.	0.	0.	13.08516
505	MSSSRC1	5.33	5.33	5.33	0.	0.	0.	13.985
506	MSSSRC1	5.92	5.92	5.92	0.	0.	0.	14.885
508	MSSSRC1	6.78	6.78	6.78	0.	0.	0.	16.16333
509	MSSSRC1	7.86	7.86	7.86	0.	0.	0.	0.37992
510	MSSSRC1	8.08	8.08	8.08	0.	0.	0.	4.18644
511	MSSSRC1	6.31	6.31	6.31	0.	0.	0.	1.31492
512	MSSSRC1	6.26	6.26	6.26	0.	0.	0.	2.21492
513	MSSSRC1	6.53	6.53	6.53	0.	0.	0.	3.11492
514	MSSSRC1	4.76	4.76	4.76	0.	0.	0.	0.37992
515	MSSSRC1	4.98	4.98	4.98	0.	0.	0.	4.18644
516	MSSSRC1	4.65	4.65	4.65	0.	0.	0.	1.31492
517	MSSSRC1	4.59	4.59	4.59	0.	0.	0.	2.21492
518	MSSSRC1	4.86	4.86	4.86	0.	0.	0.	3.11492
519	MSSSRC1	7.96	7.96	7.96	0.	0.	0.	0.37992
520	MSSSRC1	6.15	6.15	6.15	0.	0.	0.	4.18644

Table 25: Assembled Joint Masses, Part 1 of 2

Joint	MassSource	U1	U2	U3	R1	R2	R3	CenterX
		Kgf-s2/m	Kgf-s2/m	Kgf-s2/m	Kgf-m-s2	Kgf-m-s2	Kgf-m-s2	m
521	MSSSRC1	6.37	6.37	6.37	0.	0.	0.	1.31492
522	MSSSRC1	6.31	6.31	6.31	0.	0.	0.	2.21492
523	MSSSRC1	6.58	6.58	6.58	0.	0.	0.	3.11492
524	MSSSRC1	6.81	6.81	6.81	0.	0.	0.	1.31492
525	MSSSRC1	6.76	6.76	6.76	0.	0.	0.	2.21492
526	MSSSRC1	6.76	6.76	6.76	0.	0.	0.	3.11492
527	MSSSRC1	6.76	6.76	6.76	0.	0.	0.	4.01492
528	MSSSRC1	6.08	6.08	6.08	0.	0.	0.	4.91492
529	MSSSRC1	8.74	8.74	8.74	0.	0.	0.	5.37992
530	MSSSRC1	6.03	6.03	6.03	0.	0.	0.	5.81492
531	MSSSRC1	6.76	6.76	6.76	0.	0.	0.	6.71492
532	MSSSRC1	6.76	6.76	6.76	0.	0.	0.	7.61492
533	MSSSRC1	6.39	6.39	6.39	0.	0.	0.	8.51492
534	MSSSRC1	9.99	9.99	9.99	0.	0.	0.	9.17992
535	MSSSRC1	6.97	6.97	6.97	0.	0.	0.	10.215
536	MSSSRC1	6.97	6.97	6.97	0.	0.	0.	11.115
537	MSSSRC1	10.41	10.41	10.41	0.	0.	0.	12.15031
538	MSSSRC1	6.81	6.81	6.81	0.	0.	0.	13.08509
539	MSSSRC1	6.76	6.76	6.76	0.	0.	0.	13.98531
540	MSSSRC1	6.7	6.7	6.7	0.	0.	0.	14.88531
541	MSSSRC1	10.15	10.15	10.15	0.	0.	0.	15.75031
542	MSSSRC1	6.81	6.81	6.81	0.	0.	0.	16.68531
543	MSSSRC1	6.77	6.77	6.77	0.	0.	0.	17.58531
544	MSSSRC1	6.77	6.77	6.77	0.	0.	0.	18.48531
545	MSSSRC1	6.78	6.78	6.78	0.	0.	0.	19.38531
546	MSSSRC1	6.59	6.59	6.59	0.	0.	0.	20.28531
547	MSSSRC1	8.62	8.62	8.62	0.	0.	0.	21.05875
548	MSSSRC1	8.79	8.79	8.79	0.	0.	0.	0.37992
549	MSSSRC1	6.83	6.83	6.83	0.	0.	0.	1.31492
550	MSSSRC1	6.77	6.77	6.77	0.	0.	0.	2.21469
551	MSSSRC1	6.77	6.77	6.77	0.	0.	0.	3.11492
552	MSSSRC1	6.77	6.77	6.77	0.	0.	0.	4.01469
553	MSSSRC1	6.09	6.09	6.09	0.	0.	0.	4.91492
554	MSSSRC1	8.77	8.77	8.77	0.	0.	0.	5.37992
555	MSSSRC1	6.05	6.05	6.05	0.	0.	0.	5.81469
556	MSSSRC1	6.77	6.77	6.77	0.	0.	0.	6.71492
557	MSSSRC1	6.77	6.77	6.77	0.	0.	0.	7.61469
558	MSSSRC1	6.41	6.41	6.41	0.	0.	0.	8.51492
559	MSSSRC1	10.02	10.02	10.02	0.	0.	0.	9.17992
560	MSSSRC1	6.99	6.99	6.99	0.	0.	0.	10.21484
561	MSSSRC1	6.99	6.99	6.99	0.	0.	0.	11.115
562	MSSSRC1	10.44	10.44	10.44	0.	0.	0.	12.15009
563	MSSSRC1	6.83	6.83	6.83	0.	0.	0.	13.08509
564	MSSSRC1	6.77	6.77	6.77	0.	0.	0.	13.98509
565	MSSSRC1	6.72	6.72	6.72	0.	0.	0.	14.88509
566	MSSSRC1	10.17	10.17	10.17	0.	0.	0.	15.75009
567	MSSSRC1	6.83	6.83	6.83	0.	0.	0.	16.68509
568	MSSSRC1	6.77	6.77	6.77	0.	0.	0.	17.58509
569	MSSSRC1	6.77	6.77	6.77	0.	0.	0.	18.48509
570	MSSSRC1	6.77	6.77	6.77	0.	0.	0.	19.38509
571	MSSSRC1	6.41	6.41	6.41	0.	0.	0.	20.28509
572	MSSSRC1	8.41	8.41	8.41	0.	0.	0.	20.95216
573	MSSSRC1	8.82	8.82	8.82	0.	0.	0.	0.37992
574	MSSSRC1	5.04	5.04	5.04	0.	0.	0.	6.00531

Table 25: Assembled Joint Masses, Part 1 of 2

Joint	MassSource	U1	U2	U3	R1	R2	R3	CenterX
		Kgf-s2/m	Kgf-s2/m	Kgf-s2/m	Kgf-m-s2	Kgf-m-s2	Kgf-m-s2	m
575	MSSSRC1	6.52	6.52	6.52	0.	0.	0.	6.885
576	MSSSRC1	6.35	6.35	6.35	0.	0.	0.	7.96203
577	MSSSRC1	5.13	5.13	5.13	0.	0.	0.	8.73344
578	MSSSRC1	5.04	5.04	5.04	0.	0.	0.	9.63359
579	MSSSRC1	5.31	5.31	5.31	0.	0.	0.	10.34422
580	MSSSRC1	6.29	6.29	6.29	0.	0.	0.	11.42094
581	MSSSRC1	6.07	6.07	6.07	0.	0.	0.	12.15009
582	MSSSRC1	5.39	5.39	5.39	0.	0.	0.	13.08484
583	MSSSRC1	5.33	5.33	5.33	0.	0.	0.	13.98509
584	MSSSRC1	5.92	5.92	5.92	0.	0.	0.	14.88484
585	MSSSRC1	6.78	6.78	6.78	0.	0.	0.	16.16313
586	MSSSRC1	5.84	5.84	5.84	0.	0.	0.	5.26891
589	MSSSRC1	5.63	5.63	5.63	0.	0.	0.	20.28509
590	MSSSRC1	4.29	4.29	4.29	0.	0.	0.	19.38509
591	MSSSRC1	4.29	4.29	4.29	0.	0.	0.	18.48509
592	MSSSRC1	4.41	4.41	4.41	0.	0.	0.	17.58509
593	MSSSRC1	1.47	1.47	1.47	0.	0.	0.	17.58469
594	MSSSRC1	1.47	1.47	1.47	0.	0.	0.	18.48469
595	MSSSRC1	1.47	1.47	1.47	0.	0.	0.	19.38484
598	MSSSRC1	5.63	5.63	5.63	0.	0.	0.	20.28509
599	MSSSRC1	4.29	4.29	4.29	0.	0.	0.	19.38509
600	MSSSRC1	4.29	4.29	4.29	0.	0.	0.	18.48509
601	MSSSRC1	4.29	4.29	4.29	0.	0.	0.	17.58509
602	MSSSRC1	1.49	1.49	1.49	0.	0.	0.	17.58469
603	MSSSRC1	1.48	1.48	1.48	0.	0.	0.	18.48469
604	MSSSRC1	1.47	1.47	1.47	0.	0.	0.	19.38484
605	MSSSRC1	141.52	141.52	141.52	0.	0.	0.	16.68171
606	MSSSRC1	140.19	140.19	140.19	0.	0.	0.	16.60979
607	MSSSRC1	5.12	5.12	5.12	0.	0.	0.	17.58509
608	MSSSRC1	6.36	6.36	6.36	0.	0.	0.	18.48509
609	MSSSRC1	6.35	6.35	6.35	0.	0.	0.	19.38509
610	MSSSRC1	6.23	6.23	6.23	0.	0.	0.	20.28509
611	MSSSRC1	7.85	7.85	7.85	0.	0.	0.	21.11374
612	MSSSRC1	6.14	6.14	6.14	0.	0.	0.	17.58516
613	MSSSRC1	6.25	6.25	6.25	0.	0.	0.	18.48509
614	MSSSRC1	6.25	6.25	6.25	0.	0.	0.	19.38509
615	MSSSRC1	6.14	6.14	6.14	0.	0.	0.	20.28509
616	MSSSRC1	7.68	7.68	7.68	0.	0.	0.	21.11375
617	MSSSRC1	120.51	120.51	120.51	0.	0.	0.	16.75516
618	MSSSRC1	6.71	6.71	6.71	0.	0.	0.	21.1
619	MSSSRC1	6.75	6.75	6.75	0.	0.	0.	21.10699
SumAccelUX	MSSSRC1	13379.09	0.	0.	0.	0.	0.	11.34577
SumAccelUY	MSSSRC1	0.	13379.09	0.	0.	0.	0.	11.34577
SumAccelUZ	MSSSRC1	0.	0.	13379.09	0.	0.	0.	11.34577

Table 25: Assembled Joint Masses, Part 2 of 2

Table 25: Assembled Joint Masses, Part 2 of 2

Joint	MassSource	CenterY	CenterZ
		m	m
1	MSSSRC1	11.14739	0.
2	MSSSRC1	11.14739	4.7
3	MSSSRC1	6.67804	0.

Table 25: Assembled Joint Masses, Part 2 of 2

Joint	MassSource	CenterY	CenterZ
		m	m
4	MSSSRC1	6.67804	4.7
5	MSSSRC1	5.42804	0.
6	MSSSRC1	5.42804	4.7
7	MSSSRC1	0.37981	0.
8	MSSSRC1	0.37981	4.7
9	MSSSRC1	0.37981	0.
10	MSSSRC1	0.37981	4.7
11	MSSSRC1	5.42804	0.
12	MSSSRC1	5.42804	4.7
13	MSSSRC1	6.67814	0.
14	MSSSRC1	6.67814	4.7
15	MSSSRC1	8.21588	0.
16	MSSSRC1	8.21588	4.7
17	MSSSRC1	11.14739	0.
18	MSSSRC1	11.14739	4.7
19	MSSSRC1	8.21588	0.
20	MSSSRC1	8.21588	4.7
21	MSSSRC1	8.21588	0.
22	MSSSRC1	8.21588	4.7
23	MSSSRC1	5.42804	0.
24	MSSSRC1	5.42804	4.7
25	MSSSRC1	5.42804	0.
26	MSSSRC1	5.42804	4.7
27	MSSSRC1	0.37981	0.
28	MSSSRC1	0.37981	4.7
29	MSSSRC1	0.37981	0.
30	MSSSRC1	0.37981	4.7
31	MSSSRC1	0.37981	0.
32	MSSSRC1	0.37981	4.7
33	MSSSRC1	0.37981	0.
34	MSSSRC1	0.37981	4.7
35	MSSSRC1	5.45304	0.
36	MSSSRC1	5.45304	4.7
37	MSSSRC1	8.80214	0.
38	MSSSRC1	8.80214	4.7
39	MSSSRC1	11.61034	0.
40	MSSSRC1	11.61034	4.7
41	MSSSRC1	5.42804	0.
42	MSSSRC1	5.42804	4.7
43	MSSSRC1	8.21588	0.
44	MSSSRC1	8.21588	4.7
45	MSSSRC1	6.16002	0.
46	MSSSRC1	6.16002	4.7
47	MSSSRC1	8.79864	0.
48	MSSSRC1	8.79864	4.7
49	MSSSRC1	11.6397	0.
50	MSSSRC1	11.6397	4.7
51	MSSSRC1	5.42804	4.7
52	MSSSRC1	5.72804	4.7
53	MSSSRC1	6.60809	4.7
54	MSSSRC1	8.21588	4.7
55	MSSSRC1	2.90892	4.7
56	MSSSRC1	2.90892	4.7
57	MSSSRC1	2.90892	4.7

Table 25: Assembled Joint Masses, Part 2 of 2

Joint	MassSource	CenterY	CenterZ
		m	m
58	MSSSRC1	2.90892	4.7
59	MSSSRC1	2.90892	4.7
60	MSSSRC1	2.90892	4.7
61	MSSSRC1	2.90892	4.7
62	MSSSRC1	2.90892	4.7
63	MSSSRC1	2.90892	4.7
64	MSSSRC1	2.90892	4.7
65	MSSSRC1	2.90892	4.7
66	MSSSRC1	2.90892	4.7
67	MSSSRC1	2.90892	4.7
68	MSSSRC1	2.90892	4.7
69	MSSSRC1	2.90892	4.7
70	MSSSRC1	2.90892	4.7
71	MSSSRC1	2.90892	4.7
72	MSSSRC1	2.90892	4.7
73	MSSSRC1	2.90892	4.7
74	MSSSRC1	2.90892	4.7
75	MSSSRC1	2.90892	4.7
76	MSSSRC1	2.90892	4.7
77	MSSSRC1	2.90892	4.7
78	MSSSRC1	2.90892	4.7
79	MSSSRC1	2.90892	4.7
80	MSSSRC1	0.37981	4.7
81	MSSSRC1	0.37981	4.7
82	MSSSRC1	0.37981	4.7
83	MSSSRC1	0.37981	4.7
84	MSSSRC1	0.37981	4.7
85	MSSSRC1	0.37981	4.7
86	MSSSRC1	0.37981	4.7
87	MSSSRC1	0.37981	4.7
88	MSSSRC1	0.37981	4.7
89	MSSSRC1	0.37981	4.7
90	MSSSRC1	0.37981	4.7
91	MSSSRC1	0.37981	4.7
92	MSSSRC1	0.37981	4.7
93	MSSSRC1	0.37981	4.7
94	MSSSRC1	0.37981	4.7
95	MSSSRC1	0.37981	4.7
96	MSSSRC1	0.37981	4.7
97	MSSSRC1	0.37981	4.7
98	MSSSRC1	0.37981	4.7
99	MSSSRC1	5.42804	4.7
100	MSSSRC1	5.42804	4.7
101	MSSSRC1	5.42804	4.7
102	MSSSRC1	5.42804	4.7
103	MSSSRC1	5.42804	4.7
104	MSSSRC1	5.42804	4.7
105	MSSSRC1	5.42804	4.7
106	MSSSRC1	5.42804	4.7
107	MSSSRC1	5.42804	4.7
108	MSSSRC1	5.42804	4.7
109	MSSSRC1	5.42804	4.7
110	MSSSRC1	5.42804	4.7
111	MSSSRC1	5.42804	4.7

Table 25: Assembled Joint Masses, Part 2 of 2

Joint	MassSource	CenterY	CenterZ
		m	m
112	MSSSRC1	5.42804	4.7
113	MSSSRC1	5.4324	4.7
114	MSSSRC1	5.4366	4.7
115	MSSSRC1	5.44054	4.7
116	MSSSRC1	5.44499	4.7
117	MSSSRC1	5.44918	4.7
118	MSSSRC1	5.42804	4.7
119	MSSSRC1	5.42804	4.7
120	MSSSRC1	5.42804	4.7
121	MSSSRC1	5.42804	4.7
122	MSSSRC1	5.42804	4.7
123	MSSSRC1	11.14739	4.7
124	MSSSRC1	11.14739	4.7
125	MSSSRC1	11.14739	4.7
126	MSSSRC1	8.91272	4.7
127	MSSSRC1	6.67807	4.7
128	MSSSRC1	6.67809	4.7
129	MSSSRC1	6.67809	4.7
130	MSSSRC1	6.67812	4.7
131	MSSSRC1	8.91277	4.7
132	MSSSRC1	8.91273	4.7
133	MSSSRC1	8.91274	4.7
134	MSSSRC1	8.91275	4.7
135	MSSSRC1	6.60809	4.7
136	MSSSRC1	6.60809	4.7
137	MSSSRC1	6.60809	4.7
138	MSSSRC1	6.60809	4.7
139	MSSSRC1	6.60809	4.7
140	MSSSRC1	6.60809	4.7
141	MSSSRC1	6.60809	4.7
142	MSSSRC1	6.60809	4.7
143	MSSSRC1	6.60809	4.7
144	MSSSRC1	6.60809	4.7
145	MSSSRC1	6.60809	4.7
146	MSSSRC1	6.60809	4.7
147	MSSSRC1	6.60809	4.7
148	MSSSRC1	8.80147	4.7
149	MSSSRC1	11.61555	4.7
150	MSSSRC1	8.80075	4.7
151	MSSSRC1	11.62135	4.7
152	MSSSRC1	8.80003	4.7
153	MSSSRC1	11.62715	4.7
154	MSSSRC1	8.7993	4.7
155	MSSSRC1	11.63295	4.7
156	MSSSRC1	11.14739	9.1
157	MSSSRC1	6.67804	9.1
158	MSSSRC1	11.14739	9.1
159	MSSSRC1	6.67814	9.1
160	MSSSRC1	8.21588	9.1
161	MSSSRC1	5.42804	9.1
162	MSSSRC1	5.42804	9.1
163	MSSSRC1	0.37981	9.1
164	MSSSRC1	0.37981	9.1
165	MSSSRC1	0.37981	9.1

Table 25: Assembled Joint Masses, Part 2 of 2

Joint	MassSource	CenterY	CenterZ
		m	m
166	MSSSRC1	0.37981	9.1
167	MSSSRC1	0.37981	9.1
168	MSSSRC1	0.37981	9.1
169	MSSSRC1	5.45304	9.1
170	MSSSRC1	8.80214	9.1
171	MSSSRC1	11.61034	9.1
172	MSSSRC1	11.6397	9.1
173	MSSSRC1	8.79864	9.1
174	MSSSRC1	8.21588	9.1
175	MSSSRC1	8.21588	9.1
176	MSSSRC1	8.21588	9.1
177	MSSSRC1	5.42804	9.1
178	MSSSRC1	5.42804	9.1
179	MSSSRC1	5.42804	9.1
180	MSSSRC1	5.42804	9.1
181	MSSSRC1	5.72804	9.1
182	MSSSRC1	6.60809	9.1
183	MSSSRC1	8.21588	9.1
184	MSSSRC1	2.90892	9.1
185	MSSSRC1	2.90892	9.1
186	MSSSRC1	2.90892	9.1
187	MSSSRC1	2.90892	9.1
188	MSSSRC1	2.90892	9.1
189	MSSSRC1	2.90892	9.1
190	MSSSRC1	2.90892	9.1
191	MSSSRC1	2.90892	9.1
192	MSSSRC1	2.90892	9.1
193	MSSSRC1	2.90892	9.1
194	MSSSRC1	2.90892	9.1
195	MSSSRC1	2.90892	9.1
196	MSSSRC1	2.90892	9.1
197	MSSSRC1	2.90892	9.1
198	MSSSRC1	2.90892	9.1
199	MSSSRC1	2.90892	9.1
200	MSSSRC1	2.90892	9.1
201	MSSSRC1	2.90892	9.1
202	MSSSRC1	2.90892	9.1
203	MSSSRC1	2.90892	9.1
204	MSSSRC1	2.90892	9.1
205	MSSSRC1	2.90892	9.1
206	MSSSRC1	2.90892	9.1
207	MSSSRC1	2.90892	9.1
208	MSSSRC1	2.90892	9.1
209	MSSSRC1	0.37981	9.1
210	MSSSRC1	0.37981	9.1
211	MSSSRC1	0.37981	9.1
212	MSSSRC1	0.37981	9.1
213	MSSSRC1	0.37981	9.1
214	MSSSRC1	0.37981	9.1
215	MSSSRC1	0.37981	9.1
216	MSSSRC1	0.37981	9.1
217	MSSSRC1	0.37981	9.1
218	MSSSRC1	0.37981	9.1
219	MSSSRC1	0.37981	9.1

Table 25: Assembled Joint Masses, Part 2 of 2

Joint	MassSource	CenterY	CenterZ
		m	m
220	MSSSRC1	0.37981	9.1
221	MSSSRC1	0.37981	9.1
222	MSSSRC1	0.37981	9.1
223	MSSSRC1	0.37981	9.1
224	MSSSRC1	0.37981	9.1
225	MSSSRC1	0.37981	9.1
226	MSSSRC1	0.37981	9.1
227	MSSSRC1	0.37981	9.1
228	MSSSRC1	5.42804	9.1
229	MSSSRC1	5.42804	9.1
230	MSSSRC1	5.42804	9.1
231	MSSSRC1	5.42804	9.1
232	MSSSRC1	5.42804	9.1
233	MSSSRC1	5.42804	9.1
234	MSSSRC1	5.42804	9.1
235	MSSSRC1	5.42804	9.1
236	MSSSRC1	5.42804	9.1
237	MSSSRC1	5.42804	9.1
238	MSSSRC1	5.42804	9.1
239	MSSSRC1	5.42804	9.1
240	MSSSRC1	5.42804	9.1
241	MSSSRC1	5.42804	9.1
242	MSSSRC1	5.4324	9.1
243	MSSSRC1	5.4366	9.1
244	MSSSRC1	5.44054	9.1
245	MSSSRC1	5.44499	9.1
246	MSSSRC1	5.44918	9.1
247	MSSSRC1	5.42804	9.1
248	MSSSRC1	5.42804	9.1
249	MSSSRC1	5.42804	9.1
250	MSSSRC1	5.42804	9.1
251	MSSSRC1	5.42804	9.1
252	MSSSRC1	11.14739	9.1
253	MSSSRC1	11.14739	9.1
254	MSSSRC1	11.14739	9.1
255	MSSSRC1	8.91272	9.1
256	MSSSRC1	6.67807	9.1
257	MSSSRC1	6.67809	9.1
258	MSSSRC1	6.67809	9.1
259	MSSSRC1	6.67812	9.1
260	MSSSRC1	8.91277	9.1
261	MSSSRC1	8.91273	9.1
262	MSSSRC1	8.91274	9.1
263	MSSSRC1	8.91275	9.1
264	MSSSRC1	6.60809	9.1
265	MSSSRC1	6.60809	9.1
266	MSSSRC1	6.60809	9.1
267	MSSSRC1	6.60809	9.1
268	MSSSRC1	6.60809	9.1
269	MSSSRC1	6.60809	9.1
270	MSSSRC1	6.60809	9.1
271	MSSSRC1	6.60809	9.1
272	MSSSRC1	6.60809	9.1
273	MSSSRC1	6.60809	9.1

Table 25: Assembled Joint Masses, Part 2 of 2

Joint	MassSource	CenterY	CenterZ
		m	m
274	MSSSRC1	6.60809	9.1
275	MSSSRC1	6.60809	9.1
276	MSSSRC1	9.71272	9.1
277	MSSSRC1	9.71277	9.1
278	MSSSRC1	8.80147	9.1
279	MSSSRC1	11.61555	9.1
280	MSSSRC1	8.80075	9.1
281	MSSSRC1	11.62135	9.1
282	MSSSRC1	8.80003	9.1
283	MSSSRC1	11.62715	9.1
284	MSSSRC1	8.7993	9.1
285	MSSSRC1	11.63295	9.1
286	MSSSRC1	11.14739	12.85
287	MSSSRC1	11.14739	12.85
288	MSSSRC1	6.67804	12.85
289	MSSSRC1	6.67814	12.85
290	MSSSRC1	8.21588	12.85
291	MSSSRC1	11.6397	12.85
292	MSSSRC1	11.61034	12.85
293	MSSSRC1	8.80214	12.85
294	MSSSRC1	8.79864	12.85
295	MSSSRC1	5.45304	12.85
296	MSSSRC1	0.37981	12.85
297	MSSSRC1	8.21588	12.85
298	MSSSRC1	8.21588	12.85
299	MSSSRC1	5.42804	12.85
300	MSSSRC1	0.37981	12.85
301	MSSSRC1	0.37981	12.85
302	MSSSRC1	0.37981	12.85
303	MSSSRC1	0.37981	12.85
304	MSSSRC1	0.37981	12.85
305	MSSSRC1	5.42804	12.85
306	MSSSRC1	8.21588	12.85
307	MSSSRC1	5.42804	12.85
308	MSSSRC1	5.42804	12.85
309	MSSSRC1	5.42804	12.85
310	MSSSRC1	8.79864	12.85
311	MSSSRC1	5.43366	12.85
312	MSSSRC1	-0.58019	12.85
313	MSSSRC1	-0.58019	12.85
314	MSSSRC1	-0.58019	12.85
315	MSSSRC1	-0.58019	12.85
316	MSSSRC1	-0.58019	12.85
317	MSSSRC1	-0.58019	12.85
318	MSSSRC1	8.21588	4.7
319	MSSSRC1	8.21588	4.7
320	MSSSRC1	8.21588	4.7
321	MSSSRC1	8.21588	4.7
322	MSSSRC1	5.72804	4.7
323	MSSSRC1	8.21588	4.7
324	MSSSRC1	5.43804	4.7
325	MSSSRC1	8.21588	4.7
326	MSSSRC1	5.72804	4.7
327	MSSSRC1	8.21588	4.7

Table 25: Assembled Joint Masses, Part 2 of 2

Joint	MassSource	CenterY	CenterZ
		m	m
328	MSSSRC1	5.72804	4.7
329	MSSSRC1	8.21588	4.7
330	MSSSRC1	5.72804	4.7
331	MSSSRC1	8.21588	4.7
332	MSSSRC1	5.72804	4.7
333	MSSSRC1	8.21588	4.7
334	MSSSRC1	8.21588	9.1
335	MSSSRC1	8.21588	9.1
336	MSSSRC1	8.21588	9.1
337	MSSSRC1	8.21588	9.1
338	MSSSRC1	5.72804	9.1
339	MSSSRC1	8.21588	9.1
341	MSSSRC1	8.21588	9.1
342	MSSSRC1	5.72804	9.1
343	MSSSRC1	8.21588	9.1
344	MSSSRC1	5.72804	9.1
345	MSSSRC1	8.21588	9.1
346	MSSSRC1	5.72804	9.1
347	MSSSRC1	8.21588	9.1
348	MSSSRC1	5.72804	9.1
349	MSSSRC1	8.21588	9.1
352	MSSSRC1	5.72804	9.1
353	MSSSRC1	6.60813	9.1
354	MSSSRC1	6.60813	9.1
355	MSSSRC1	6.60813	9.1
356	MSSSRC1	6.60813	9.1
357	MSSSRC1	6.60813	9.1
358	MSSSRC1	8.79864	9.1
359	MSSSRC1	6.60809	9.1
360	MSSSRC1	5.43415	9.1
361	MSSSRC1	8.11272	9.1
362	MSSSRC1	8.11277	9.1
367	MSSSRC1	5.42797	9.1
368	MSSSRC1	5.43242	9.1
369	MSSSRC1	5.43648	9.1
370	MSSSRC1	5.44047	9.1
371	MSSSRC1	5.44492	9.1
373	MSSSRC1	5.44055	9.1
374	MSSSRC1	5.44508	9.1
375	MSSSRC1	5.4493	9.1
380	MSSSRC1	5.72813	9.1
381	MSSSRC1	5.72813	9.1
382	MSSSRC1	5.72813	9.1
383	MSSSRC1	5.72813	9.1
384	MSSSRC1	7.70516	9.1
385	MSSSRC1	7.70477	9.1
386	MSSSRC1	5.72671	9.1
387	MSSSRC1	5.72619	9.1
388	MSSSRC1	8.21626	9.1
389	MSSSRC1	5.73218	9.1
390	MSSSRC1	5.42797	4.7
391	MSSSRC1	5.43242	4.7
392	MSSSRC1	5.43648	4.7
393	MSSSRC1	5.44055	4.7

Table 25: Assembled Joint Masses, Part 2 of 2

Joint	MassSource	CenterY	CenterZ
		m	m
394	MSSSRC1	5.44492	4.7
395	MSSSRC1	5.72805	4.7
396	MSSSRC1	5.72805	4.7
397	MSSSRC1	5.72805	4.7
398	MSSSRC1	5.72805	4.7
399	MSSSRC1	5.72805	4.7
400	MSSSRC1	11.62719	4.7
401	MSSSRC1	11.62133	4.7
402	MSSSRC1	11.61555	4.7
403	MSSSRC1	7.70444	9.1
404	MSSSRC1	7.70408	9.1
405	MSSSRC1	5.73677	4.7
406	MSSSRC1	7.70383	9.1
407	MSSSRC1	5.72446	4.7
408	MSSSRC1	8.22988	4.7
409	MSSSRC1	6.16002	4.7
410	MSSSRC1	6.33023	4.7
411	MSSSRC1	8.21588	4.7
412	MSSSRC1	8.21588	9.1
413	MSSSRC1	7.70336	9.1
417	MSSSRC1	1.65892	9.1
418	MSSSRC1	1.65892	9.1
419	MSSSRC1	1.65892	9.1
420	MSSSRC1	1.65892	9.1
421	MSSSRC1	1.65892	9.1
422	MSSSRC1	1.65892	9.1
423	MSSSRC1	1.65892	9.1
424	MSSSRC1	1.65892	9.1
425	MSSSRC1	1.65892	9.1
426	MSSSRC1	1.65892	9.1
427	MSSSRC1	1.65892	9.1
428	MSSSRC1	1.65892	9.1
429	MSSSRC1	1.65892	9.1
430	MSSSRC1	1.65892	9.1
431	MSSSRC1	1.65892	9.1
432	MSSSRC1	1.65892	9.1
433	MSSSRC1	1.65892	9.1
434	MSSSRC1	1.65892	9.1
435	MSSSRC1	1.65892	9.1
436	MSSSRC1	1.65892	9.1
437	MSSSRC1	1.65892	9.1
438	MSSSRC1	1.65892	9.1
439	MSSSRC1	1.65892	9.1
440	MSSSRC1	1.65892	9.1
442	MSSSRC1	4.15892	9.1
443	MSSSRC1	4.15892	9.1
444	MSSSRC1	4.15892	9.1
445	MSSSRC1	4.15892	9.1
446	MSSSRC1	4.15892	9.1
447	MSSSRC1	4.15892	9.1
448	MSSSRC1	4.15892	9.1
449	MSSSRC1	4.15892	9.1
450	MSSSRC1	4.15892	9.1
451	MSSSRC1	4.15892	9.1

Table 25: Assembled Joint Masses, Part 2 of 2

Joint	MassSource	CenterY	CenterZ
		m	m
452	MSSSRC1	4.15892	9.1
453	MSSSRC1	4.15892	9.1
454	MSSSRC1	4.15892	9.1
455	MSSSRC1	4.15892	9.1
456	MSSSRC1	4.15892	9.1
457	MSSSRC1	4.15892	9.1
458	MSSSRC1	4.15892	9.1
459	MSSSRC1	4.15892	9.1
460	MSSSRC1	4.15892	9.1
461	MSSSRC1	4.15892	9.1
462	MSSSRC1	4.15892	9.1
463	MSSSRC1	4.15892	9.1
464	MSSSRC1	4.15892	9.1
465	MSSSRC1	4.15892	9.1
471	MSSSRC1	10.03006	9.1
472	MSSSRC1	10.03007	9.1
473	MSSSRC1	10.03008	9.1
474	MSSSRC1	10.03008	9.1
475	MSSSRC1	10.03006	9.1
476	MSSSRC1	7.7954	9.1
477	MSSSRC1	7.7954	9.1
478	MSSSRC1	7.79539	9.1
479	MSSSRC1	7.79539	9.1
480	MSSSRC1	7.7954	9.1
481	MSSSRC1	1.63078	9.1
482	MSSSRC1	4.12637	9.1
483	MSSSRC1	10.68135	9.1
484	MSSSRC1	10.68715	9.1
485	MSSSRC1	9.74135	9.1
486	MSSSRC1	9.74715	9.1
487	MSSSRC1	10.68148	9.1
488	MSSSRC1	10.68742	9.1
489	MSSSRC1	9.74148	9.1
490	MSSSRC1	9.7475	9.1
491	MSSSRC1	10.68734	9.1
492	MSSSRC1	10.61336	9.1
493	MSSSRC1	9.74727	9.1
494	MSSSRC1	9.67867	9.1
495	MSSSRC1	7.41203	9.1
496	MSSSRC1	7.41203	9.1
497	MSSSRC1	7.41211	9.1
498	MSSSRC1	7.41219	9.1
499	MSSSRC1	7.41203	9.1
500	MSSSRC1	7.41219	9.1
501	MSSSRC1	7.41227	9.1
502	MSSSRC1	7.41234	9.1
503	MSSSRC1	7.41188	9.1
504	MSSSRC1	7.41188	9.1
505	MSSSRC1	7.41188	9.1
506	MSSSRC1	7.41188	9.1
508	MSSSRC1	7.41183	9.1
509	MSSSRC1	10.04739	4.7
510	MSSSRC1	10.04739	4.7
511	MSSSRC1	10.04739	4.7

Table 25: Assembled Joint Masses, Part 2 of 2

Joint	MassSource	CenterY	CenterZ
		m	m
512	MSSSRC1	10.04739	4.7
513	MSSSRC1	10.04739	4.7
514	MSSSRC1	8.94739	4.7
515	MSSSRC1	8.94739	4.7
516	MSSSRC1	8.94739	4.7
517	MSSSRC1	8.94739	4.7
518	MSSSRC1	8.94739	4.7
519	MSSSRC1	7.84739	4.7
520	MSSSRC1	7.84739	4.7
521	MSSSRC1	7.84739	4.7
522	MSSSRC1	7.84739	4.7
523	MSSSRC1	7.84739	4.7
524	MSSSRC1	4.16848	4.7
525	MSSSRC1	4.16848	4.7
526	MSSSRC1	4.16848	4.7
527	MSSSRC1	4.16848	4.7
528	MSSSRC1	4.16848	4.7
529	MSSSRC1	4.16848	4.7
530	MSSSRC1	4.16848	4.7
531	MSSSRC1	4.16848	4.7
532	MSSSRC1	4.16848	4.7
533	MSSSRC1	4.16848	4.7
534	MSSSRC1	4.16848	4.7
535	MSSSRC1	4.16848	4.7
536	MSSSRC1	4.16848	4.7
537	MSSSRC1	4.16844	4.7
538	MSSSRC1	4.16844	4.7
539	MSSSRC1	4.16852	4.7
540	MSSSRC1	4.16852	4.7
541	MSSSRC1	4.16852	4.7
542	MSSSRC1	4.1707	4.7
543	MSSSRC1	4.17281	4.7
544	MSSSRC1	4.17484	4.7
545	MSSSRC1	4.17492	4.7
546	MSSSRC1	4.175	4.7
547	MSSSRC1	4.1425	4.7
548	MSSSRC1	4.16848	4.7
549	MSSSRC1	1.64437	4.7
550	MSSSRC1	1.64438	4.7
551	MSSSRC1	1.64438	4.7
552	MSSSRC1	1.64438	4.7
553	MSSSRC1	1.64437	4.7
554	MSSSRC1	1.64437	4.7
555	MSSSRC1	1.64438	4.7
556	MSSSRC1	1.64437	4.7
557	MSSSRC1	1.64438	4.7
558	MSSSRC1	1.64438	4.7
559	MSSSRC1	1.64438	4.7
560	MSSSRC1	1.64438	4.7
561	MSSSRC1	1.64437	4.7
562	MSSSRC1	1.64437	4.7
563	MSSSRC1	1.64437	4.7
564	MSSSRC1	1.64437	4.7
565	MSSSRC1	1.64437	4.7

Table 25: Assembled Joint Masses, Part 2 of 2

Joint	MassSource	CenterY	CenterZ
		m	m
566	MSSSRC1	1.64437	4.7
567	MSSSRC1	1.64437	4.7
568	MSSSRC1	1.64437	4.7
569	MSSSRC1	1.64437	4.7
570	MSSSRC1	1.64437	4.7
571	MSSSRC1	1.64437	4.7
572	MSSSRC1	1.61627	4.7
573	MSSSRC1	1.64437	4.7
574	MSSSRC1	7.41188	4.7
575	MSSSRC1	7.41188	4.7
576	MSSSRC1	7.4118	4.7
577	MSSSRC1	7.41188	4.7
578	MSSSRC1	7.4118	4.7
579	MSSSRC1	7.41188	4.7
580	MSSSRC1	7.41188	4.7
581	MSSSRC1	7.41188	4.7
582	MSSSRC1	7.4118	4.7
583	MSSSRC1	7.4118	4.7
584	MSSSRC1	7.41172	4.7
585	MSSSRC1	7.41188	4.7
586	MSSSRC1	7.41188	4.7
589	MSSSRC1	10.67555	4.7
590	MSSSRC1	10.68135	4.7
591	MSSSRC1	10.68715	4.7
592	MSSSRC1	10.69295	4.7
593	MSSSRC1	10.68719	4.7
594	MSSSRC1	10.68133	4.7
595	MSSSRC1	10.67555	4.7
598	MSSSRC1	9.73555	4.7
599	MSSSRC1	9.74135	4.7
600	MSSSRC1	9.74715	4.7
601	MSSSRC1	9.75295	4.7
602	MSSSRC1	9.74719	4.7
603	MSSSRC1	9.74133	4.7
604	MSSSRC1	9.73555	4.7
605	MSSSRC1	9.75878	4.7
606	MSSSRC1	10.69924	4.7
607	MSSSRC1	6.60809	4.7
608	MSSSRC1	6.60809	4.7
609	MSSSRC1	6.60809	4.7
610	MSSSRC1	6.60809	4.7
611	MSSSRC1	6.60809	4.7
612	MSSSRC1	7.70359	4.7
613	MSSSRC1	7.70406	4.7
614	MSSSRC1	7.70442	4.7
615	MSSSRC1	7.70478	4.7
616	MSSSRC1	7.705	4.7
617	MSSSRC1	7.70352	4.7
618	MSSSRC1	10.68141	4.7
619	MSSSRC1	9.74146	4.7
SumAccelUX	MSSSRC1	5.72526	6.86862
SumAccelUY	MSSSRC1	5.72526	6.86862
SumAccelUZ	MSSSRC1	5.72526	6.86862

7.2. Modal results

Table 26: Modal Participating Mass Ratios

Table 26: Modal Participating Mass Ratios

OutputCase	StepNum	Period	UX	UY	UZ	SumUX	SumUY	SumUZ
		Sec						
MODAL	1.	0.640104	0.014	0.485	2.045E-07	0.014	0.485	2.045E-07
MODAL	2.	0.443878	0.665	0.193	7.859E-09	0.679	0.678	2.123E-07
MODAL	3.	0.412368	0.285	0.267	9.547E-09	0.964	0.945	2.219E-07
MODAL	4.	0.18636	4.693E-07	0.032	2.446E-05	0.964	0.977	2.468E-05
MODAL	5.	0.167234	3.304E-07	6.668E-03	6.065E-05	0.964	0.984	8.533E-05
MODAL	6.	0.147772	7.206E-09	5.915E-03	4.914E-05	0.964	0.99	1.345E-04
MODAL	7.	0.136447	1.567E-07	4.872E-03	9.358E-06	0.964	0.994	1.438E-04
MODAL	8.	0.1244	3.639E-08	5.013E-03	1.079E-04	0.964	0.999	2.517E-04
MODAL	9.	0.109268	0.034	1.159E-06	1.170E-06	0.998	0.999	2.529E-04
MODAL	10.	0.103804	3.321E-06	3.270E-05	2.236E-06	0.998	1.	2.551E-04
MODAL	11.	0.100558	3.698E-04	1.127E-04	4.203E-07	0.998	1.	2.556E-04
MODAL	12.	0.09847	8.969E-06	4.729E-06	2.708E-07	0.998	1.	2.558E-04

7.3. Base reactions

Table 27: Base Reactions

Table 27: Base Reactions

OutputCase	GlobalFX	GlobalFY	GlobalFZ	GlobalMX	GlobalMY	GlobalMZ
	Kgf	Kgf	Kgf	Kgf-m	Kgf-m	Kgf-m
DEAD	-6.368E-11	-1.434E-09	213824.82	1153081.55	-2393693.	-1.705E-08
LIVE	-1.268E-11	-8.726E-10	143631.2	708839.69	-1566211.93	-2.106E-09
SX	15028.12	4880.77	3.85	39996.99	121033.79	103772.29
SY	4880.77	11314.86	28.04	92491.1	39665.69	141975.19
WB	3.401E-12	-4.554E-12	1760.27	9372.3	-18102.88	6.199E-10

8. Joint results

This section provides joint results, including items such as displacements and reactions.

Table 28: Joint Displacements

Table 28: Joint Displacements

Joint	OutputCase	U1	U2	U3	R1	R2	R3
		m	m	m	Radians	Radians	Radians
1	DEAD	0.	0.	0.	-0.000059	-0.000026	5.285E-06
1	LIVE	0.	0.	0.	-0.000039	-0.000029	4.784E-06
1	SX	0.	0.	0.	0.000732	0.001237	0.000215
1	SY	0.	0.	0.	0.004031	0.000983	0.000805
1	WB	0.	0.	0.	5.090E-07	-8.961E-07	1.330E-07
2	DEAD	-0.000017	-0.000033	-0.000077	0.00014	0.000044	5.285E-06

Table 28: Joint Displacements

Joint	OutputCase	U1	U2	U3	R1	R2	R3
		m	m	m	Radians	Radians	Radians
2	LIVE	-0.000043	-0.00005	-0.000042	0.000111	0.000034	4.784E-06
2	SX	0.004778	0.002583	0.000023	0.000182	0.000545	0.000215
2	SY	0.003729	0.014212	0.000021	0.000994	0.00039	0.000805
2	WB	-3.418E-06	-2.277E-06	3.862E-09	4.350E-07	-3.669E-07	1.330E-07
3	DEAD	0.	0.	0.	0.000071	-0.000024	5.573E-06
3	LIVE	0.	0.	0.	0.00006	-0.000027	4.823E-06
3	SX	0.	0.	0.	0.000731	0.001227	0.000214
3	SY	0.	0.	0.	0.004027	0.000387	0.000809
3	WB	0.	0.	0.	4.684E-07	-6.740E-07	1.192E-07
4	DEAD	0.000012	-0.000034	-0.000083	-0.000121	0.000059	5.573E-06
4	LIVE	-0.000016	-0.000051	-0.000048	-0.000087	0.000047	4.823E-06
4	SX	0.004735	0.002583	0.000029	0.000187	0.000538	0.000214
4	SY	0.001491	0.014213	0.000033	0.001003	0.000169	0.000809
4	WB	-2.759E-06	-2.274E-06	-1.659E-07	5.152E-07	-4.011E-07	1.192E-07
5	DEAD	0.	0.	0.	-0.000078	-0.000041	4.916E-06
5	LIVE	0.	0.	0.	-0.000053	-0.000043	4.470E-06
5	SX	0.	0.	0.	0.000727	0.001215	0.000215
5	SY	0.	0.	0.	0.004013	0.000476	0.000809
5	WB	0.	0.	0.	7.017E-07	-5.822E-07	1.329E-07
6	DEAD	0.000018	-0.000028	-0.000094	0.000176	0.000101	4.916E-06
6	LIVE	-0.000011	-0.000044	-0.000057	0.000136	0.000084	4.470E-06
6	SX	0.004765	0.002582	0.000012	0.000191	0.000585	0.000215
6	SY	0.001888	0.014245	0.000027	0.00105	0.000243	0.000809
6	WB	-2.600E-06	-2.106E-06	-1.226E-08	-6.351E-08	-4.916E-07	1.329E-07
7	DEAD	0.	0.	0.	0.00009	-0.000035	5.345E-06
7	LIVE	0.	0.	0.	0.000075	-0.000036	4.608E-06
7	SX	0.	0.	0.	0.000727	0.001288	0.000214
7	SY	0.	0.	0.	0.004022	0.001428	0.000807
7	WB	0.	0.	0.	5.103E-07	-5.226E-07	1.238E-07
8	DEAD	0.000043	-0.000029	-0.000108	-0.000162	0.000104	5.345E-06
8	LIVE	0.00001	-0.000046	-0.000079	-0.000122	0.000085	4.608E-06
8	SX	0.005031	0.002582	0.000017	0.000194	0.000606	0.000214
8	SY	0.005463	0.014243	0.000018	0.001031	0.000597	0.000807
8	WB	-2.023E-06	-2.110E-06	-8.681E-07	3.252E-07	-2.333E-07	1.238E-07
9	DEAD	0.	0.	0.	0.000174	0.000033	5.059E-06
9	LIVE	0.	0.	0.	0.000146	0.000021	4.385E-06
9	SX	0.	0.	0.	0.000525	0.001361	0.000214
9	SY	0.	0.	0.	0.002931	0.001499	0.000811
9	WB	0.	0.	0.	3.663E-07	-5.481E-07	1.135E-07
10	DEAD	0.000045	-5.957E-06	-0.000172	-0.000346	-0.000041	5.059E-06
10	LIVE	0.000012	-0.000025	-0.000135	-0.000279	-0.000037	4.385E-06
10	SX	0.005033	0.001873	8.674E-06	0.000146	0.000451	0.000214
10	SY	0.005467	0.010395	0.000014	0.000762	0.000448	0.000811
10	WB	-2.014E-06	-1.546E-06	-1.174E-06	2.538E-07	-1.734E-07	1.135E-07
11	DEAD	0.	0.	0.	-0.000115	8.075E-06	5.017E-06
11	LIVE	0.	0.	0.	-0.000078	-6.608E-06	4.371E-06
11	SX	0.	0.	0.	0.000559	0.00129	0.000215
11	SY	0.	0.	0.	0.003125	0.000533	0.00081
11	WB	0.	0.	0.	1.358E-06	-1.472E-06	1.152E-07
12	DEAD	0.00002	-3.091E-06	-0.000189	0.000233	-3.811E-06	5.017E-06
12	LIVE	-9.364E-06	-0.000023	-0.000159	0.000172	7.864E-06	4.371E-06
12	SX	0.004765	0.001873	8.702E-06	0.000078	0.000425	0.000215
12	SY	0.001889	0.010398	0.000042	0.000373	0.00014	0.00081
12	WB	-2.594E-06	-1.560E-06	-2.146E-06	-1.737E-06	1.414E-06	1.152E-07

Table 28: Joint Displacements

Joint	OutputCase	U1	U2	U3	R1	R2	R3
		m	m	m	Radians	Radians	Radians
13	DEAD	0.	0.	0.	-0.000014	0.000029	4.915E-06
13	LIVE	0.	0.	0.	-7.950E-06	0.000017	4.479E-06
13	SX	0.	0.	0.	0.000588	0.001228	0.000214
13	SY	0.	0.	0.	0.003349	0.000387	0.00081
13	WB	0.	0.	0.	6.549E-07	-7.754E-07	1.370E-07
14	DEAD	0.000013	-8.735E-06	-0.000121	0.000034	-0.000053	4.915E-06
14	LIVE	-0.000015	-0.000028	-0.000088	0.000034	-0.000047	4.479E-06
14	SX	0.004735	0.002014	0.000019	0.000126	0.000537	0.000214
14	SY	0.001491	0.011307	6.953E-06	0.000505	0.000169	0.00081
14	WB	-2.748E-06	-1.704E-06	-1.028E-06	-2.272E-07	-1.771E-07	1.370E-07
15	DEAD	0.	0.	0.	-7.804E-06	-0.000021	4.570E-06
15	LIVE	0.	0.	0.	-0.000011	-0.000035	4.201E-06
15	SX	0.	0.	0.	0.000537	0.001232	0.000214
15	SY	0.	0.	0.	0.003009	0.000482	0.000815
15	WB	0.	0.	0.	-6.814E-07	-1.994E-06	1.368E-07
16	DEAD	6.321E-06	-3.802E-06	-0.000059	0.000018	0.00005	4.570E-06
16	LIVE	-0.000022	-0.000024	-0.000047	0.000038	0.000061	4.201E-06
16	SX	0.004716	0.00189	0.000021	0.000134	0.000517	0.000214
16	SY	0.00184	0.010516	0.000034	0.000683	0.000198	0.000815
16	WB	-2.956E-06	-1.570E-06	-1.964E-06	2.381E-06	2.287E-06	1.368E-07
17	DEAD	0.	0.	0.	-0.000057	0.000018	5.826E-06
17	LIVE	0.	0.	0.	-0.000043	7.677E-06	5.166E-06
17	SX	0.	0.	0.	0.000564	0.001237	0.000215
17	SY	0.	0.	0.	0.003175	0.000978	0.000806
17	WB	0.	0.	0.	-3.867E-09	-8.824E-07	1.336E-07
18	DEAD	-0.000016	-7.487E-06	-0.000075	0.00012	-0.00005	5.826E-06
18	LIVE	-0.000042	-0.000027	-0.000041	0.000104	-0.000044	5.166E-06
18	SX	0.004778	0.002015	0.00003	0.000158	0.000546	0.000215
18	SY	0.003729	0.011313	0.000038	0.00086	0.000399	0.000806
18	WB	-3.417E-06	-1.704E-06	-2.569E-08	1.102E-06	-3.950E-07	1.336E-07
19	DEAD	0.	0.	0.	-7.170E-06	0.000014	4.615E-06
19	LIVE	0.	0.	0.	-3.095E-06	7.925E-06	3.997E-06
19	SX	0.	0.	0.	0.000391	0.00132	0.000214
19	SY	0.	0.	0.	0.00184	0.000518	0.000806
19	WB	0.	0.	0.	3.416E-08	-2.764E-07	1.102E-07
20	DEAD	7.969E-06	0.000016	-0.000082	4.341E-06	-0.000024	4.615E-06
20	LIVE	-0.00002	-6.617E-06	-0.000072	0.00001	-0.00003	3.997E-06
20	SX	0.004712	0.001618	0.000017	0.000252	0.000326	0.000214
20	SY	0.001838	0.007427	5.835E-06	0.001059	0.000122	0.000806
20	WB	-2.883E-06	-1.085E-06	-2.690E-06	6.277E-07	-1.333E-06	1.102E-07
21	DEAD	0.	0.	0.	-0.000011	4.452E-06	4.637E-06
21	LIVE	0.	0.	0.	-7.333E-06	-4.895E-07	3.958E-06
21	SX	0.	0.	0.	0.0004	0.001315	0.000213
21	SY	0.	0.	0.	0.001411	0.000515	0.000811
21	WB	0.	0.	0.	-1.073E-07	-6.291E-07	1.077E-07
22	DEAD	8.606E-06	0.000028	-0.00008	4.638E-06	-3.767E-06	4.637E-06
22	LIVE	-0.000019	3.972E-06	-0.000068	0.000012	-0.000012	3.958E-06
22	SX	0.004706	0.001682	0.000018	0.000275	0.000333	0.000213
22	SY	0.001835	0.005741	6.708E-06	0.000843	0.000126	0.000811
22	WB	-2.867E-06	-7.987E-07	-2.531E-06	7.289E-07	-5.689E-07	1.077E-07
23	DEAD	0.	0.	0.	-0.000143	0.000022	4.564E-06
23	LIVE	0.	0.	0.	-0.000114	0.000022	3.807E-06
23	SX	0.	0.	0.	0.000463	0.0013	0.000213
23	SY	0.	0.	0.	0.001574	0.000519	0.000812

Table 28: Joint Displacements

Joint	OutputCase	U1	U2	U3	R1	R2	R3
		m	m	m	Radians	Radians	Radians
23	WB	0.	0.	0.	4.100E-08	3.563E-07	9.374E-08
24	DEAD	0.000022	0.000029	-0.000145	0.000269	-0.000031	4.564E-06
24	LIVE	-7.266E-06	5.005E-06	-0.000122	0.000227	-0.000052	3.807E-06
24	SX	0.00476	0.001694	9.217E-06	0.000154	0.000399	0.000213
24	SY	0.001887	0.005634	0.000013	0.000445	0.000151	0.000812
24	WB	-2.537E-06	-8.031E-07	-2.026E-06	4.327E-07	-2.454E-06	9.374E-08
25	DEAD	0.	0.	0.	-0.000146	0.000017	4.667E-06
25	LIVE	0.	0.	0.	-0.000118	8.574E-06	4.077E-06
25	SX	0.	0.	0.	0.000449	0.001301	0.000214
25	SY	0.	0.	0.	0.002145	0.000518	0.000813
25	WB	0.	0.	0.	-4.070E-08	-5.275E-07	1.125E-07
26	DEAD	0.000021	0.000016	-0.000155	0.000284	-0.000022	4.667E-06
26	LIVE	-8.148E-06	-6.684E-06	-0.000133	0.000241	-0.000024	4.077E-06
26	SX	0.004764	0.001623	7.568E-06	0.00014	0.0004	0.000214
26	SY	0.001887	0.007601	0.000017	0.000555	0.000153	0.000813
26	WB	-2.567E-06	-1.119E-06	-2.277E-06	8.004E-07	-5.858E-07	1.125E-07
27	DEAD	0.	0.	0.	0.000139	0.00002	4.743E-06
27	LIVE	0.	0.	0.	0.000122	9.350E-06	4.135E-06
27	SX	0.	0.	0.	0.00045	0.001377	0.000214
27	SY	0.	0.	0.	0.002143	0.001514	0.000812
27	WB	0.	0.	0.	5.899E-07	-5.677E-07	1.127E-07
28	DEAD	0.000045	0.000013	-0.000131	-0.000289	-0.000012	4.743E-06
28	LIVE	0.000013	-9.043E-06	-0.000101	-0.000241	-0.000012	4.135E-06
28	SX	0.005035	0.001623	0.000012	0.000136	0.000418	0.000214
28	SY	0.005469	0.007601	0.000013	0.00056	0.000417	0.000812
28	WB	-2.015E-06	-1.107E-06	-9.937E-07	-4.789E-07	-1.318E-07	1.127E-07
29	DEAD	0.	0.	0.	0.000131	7.047E-06	4.791E-06
29	LIVE	0.	0.	0.	0.000115	-1.303E-06	4.090E-06
29	SX	0.	0.	0.	0.000462	0.00138	0.000213
29	SY	0.	0.	0.	0.001576	0.001516	0.000811
29	WB	0.	0.	0.	4.265E-07	-5.775E-07	1.026E-07
30	DEAD	0.000045	0.000027	-0.000127	-0.000281	0.000015	4.791E-06
30	LIVE	0.000012	2.712E-06	-0.000097	-0.000235	0.000011	4.090E-06
30	SX	0.005038	0.001694	6.496E-06	0.000158	0.000415	0.000213
30	SY	0.005466	0.005634	0.000017	0.000442	0.000411	0.000811
30	WB	-2.019E-06	-7.910E-07	-9.643E-07	-3.523E-07	-1.133E-07	1.026E-07
31	DEAD	0.	0.	0.	0.000169	-0.000014	4.537E-06
31	LIVE	0.	0.	0.	0.000145	-0.000019	3.949E-06
31	SX	0.	0.	0.	0.000552	0.001366	0.000214
31	SY	0.	0.	0.	0.00108	0.001497	0.000806
31	WB	0.	0.	0.	-1.019E-07	-5.709E-07	1.051E-07
32	DEAD	0.000045	0.000042	-0.000167	-0.000369	0.00006	4.537E-06
32	LIVE	0.000013	0.000016	-0.000133	-0.000304	0.000049	3.949E-06
32	SX	0.005044	0.002062	8.204E-06	0.000211	0.000447	0.000214
32	SY	0.005459	0.003983	0.000013	0.000381	0.000446	0.000806
32	WB	-2.016E-06	-4.226E-07	-1.120E-06	4.767E-07	-1.260E-07	1.051E-07
33	DEAD	0.	0.	0.	0.000062	0.000061	5.522E-06
33	LIVE	0.	0.	0.	0.000052	0.000045	5.000E-06
33	SX	0.	0.	0.	0.000787	0.001294	0.000216
33	SY	0.	0.	0.	0.001301	0.001419	0.000803
33	WB	0.	0.	0.	-1.370E-07	-5.729E-07	1.123E-07
34	DEAD	0.000048	0.000067	-0.000109	-0.000168	-0.000099	5.522E-06
34	LIVE	0.000015	0.000038	-0.000079	-0.000128	-0.000085	5.000E-06
34	SX	0.005048	0.002898	0.000012	0.000278	0.000605	0.000216

Table 28: Joint Displacements

Joint	OutputCase	U1	U2	U3	R1	R2	R3
		m	m	m	Radians	Radians	Radians
34	SY	0.00545	0.004785	0.000012	0.000459	0.000606	0.000803
34	WB	-2.010E-06	1.155E-07	-7.924E-07	2.020E-07	-1.173E-07	1.123E-07
35	DEAD	0.	0.	0.	-0.000069	0.000104	5.144E-06
35	LIVE	0.	0.	0.	-0.000053	0.000084	4.515E-06
35	SX	0.	0.	0.	0.000857	0.001223	0.000216
35	SY	0.	0.	0.	0.00143	0.000487	0.000804
35	WB	0.	0.	0.	-5.346E-08	-6.413E-07	1.066E-07
36	DEAD	0.000026	0.000069	-0.00015	0.000094	-0.000205	5.144E-06
36	LIVE	-4.639E-06	0.000039	-0.000104	0.000081	-0.000182	4.515E-06
36	SX	0.004745	0.002939	0.000017	0.000158	0.000554	0.000216
36	SY	0.001876	0.004893	7.177E-06	0.000261	0.000212	0.000804
36	WB	-2.555E-06	1.294E-07	7.821E-08	2.477E-08	-3.352E-07	1.066E-07
37	DEAD	0.	0.	0.	-0.00002	0.000049	4.579E-06
37	LIVE	0.	0.	0.	-0.000011	0.000033	3.959E-06
37	SX	0.	0.	0.	0.000871	0.001223	0.000218
37	SY	0.	0.	0.	0.001452	0.000557	0.000797
37	WB	0.	0.	0.	-7.905E-08	-8.302E-07	8.975E-08
38	DEAD	9.031E-06	0.000069	-0.000097	-4.554E-06	-0.000099	4.579E-06
38	LIVE	-0.000019	0.00004	-0.000059	-3.353E-06	-0.000082	3.959E-06
38	SX	0.004662	0.002944	0.000027	0.000133	0.000499	0.000218
38	SY	0.00211	0.004895	0.000017	0.000217	0.000218	0.000797
38	WB	-2.882E-06	1.180E-07	2.174E-08	8.368E-08	-1.498E-07	8.975E-08
39	DEAD	0.	0.	0.	-0.00003	0.000033	4.705E-06
39	LIVE	0.	0.	0.	-0.000017	0.000019	4.074E-06
39	SX	0.	0.	0.	0.000818	0.001202	0.000219
39	SY	0.	0.	0.	0.001369	0.001049	0.000798
39	WB	0.	0.	0.	-5.226E-08	-8.561E-07	1.011E-07
40	DEAD	-3.826E-06	0.000069	-0.000064	0.000016	-0.000072	4.705E-06
40	LIVE	-0.00003	0.000039	-0.000031	9.010E-06	-0.000061	4.074E-06
40	SX	0.004675	0.002942	0.000028	0.00024	0.000552	0.000219
40	SY	0.004028	0.004886	0.000024	0.000384	0.000447	0.000798
40	WB	-3.147E-06	1.165E-07	1.275E-07	3.058E-08	-2.715E-07	1.011E-07
41	DEAD	0.	0.	0.	-0.000122	-0.000052	4.724E-06
41	LIVE	0.	0.	0.	-0.000075	-0.000055	4.186E-06
41	SX	0.	0.	0.	0.000637	0.001279	0.000213
41	SY	0.	0.	0.	0.001172	0.000512	0.000805
41	WB	0.	0.	0.	2.407E-06	-9.205E-07	1.150E-07
42	DEAD	0.000022	0.000045	-0.000229	0.000217	0.000125	4.724E-06
42	LIVE	-7.814E-06	0.000018	-0.000196	0.000139	0.000113	4.186E-06
42	SX	0.004751	0.002056	0.000014	0.000153	0.000439	0.000213
42	SY	0.001886	0.003972	0.000014	0.000194	0.000167	0.000805
42	WB	-2.557E-06	-4.370E-07	-2.234E-06	-4.572E-06	2.598E-07	1.150E-07
43	DEAD	0.	0.	0.	-0.00004	0.000017	3.824E-06
43	LIVE	0.	0.	0.	-0.000052	0.000011	3.103E-06
43	SX	0.	0.	0.	0.000572	0.001219	0.00021
43	SY	0.	0.	0.	0.001054	0.000478	0.000816
43	WB	0.	0.	0.	-2.370E-06	-1.682E-07	8.345E-08
44	DEAD	0.00001	0.000048	-0.000069	0.000051	-0.00003	3.824E-06
44	LIVE	-0.000018	0.000021	-0.000057	0.000091	-0.000035	3.103E-06
44	SX	0.004688	0.002132	0.00002	0.000223	0.000524	0.00021
44	SY	0.001822	0.003843	0.000021	0.000343	0.000198	0.000816
44	WB	-2.832E-06	-3.325E-07	-2.139E-06	4.992E-06	-1.530E-06	8.345E-08
45	DEAD	0.	0.	0.	0.	0.	0.
45	LIVE	0.	0.	0.	0.	0.	0.

Table 28: Joint Displacements

Joint	OutputCase	U1	U2	U3	R1	R2	R3
		m	m	m	Radians	Radians	Radians
45	SX	0.	0.	0.	0.	0.	0.
45	SY	0.	0.	0.	0.	0.	0.
45	WB	0.	0.	0.	0.	0.	0.
46	DEAD	0.000019	0.000049	-0.000048	-0.000037	0.000042	4.645E-06
46	LIVE	-0.00001	0.000022	-0.000015	-0.000013	-1.666E-06	3.879E-06
46	SX	0.004721	0.002192	0.000024	0.00003	0.000859	0.000209
46	SY	0.001584	0.003787	0.000044	0.000052	0.000278	0.000791
46	WB	-2.655E-06	-3.093E-07	-1.467E-07	9.304E-09	-3.450E-06	8.887E-08
47	DEAD	0.	0.	0.	0.	0.	0.
47	LIVE	0.	0.	0.	0.	0.	0.
47	SX	0.	0.	0.	0.	0.	0.
47	SY	0.	0.	0.	0.	0.	0.
47	WB	0.	0.	0.	0.	0.	0.
48	DEAD	7.825E-06	0.000049	-0.00012	-0.000017	0.000069	4.116E-06
48	LIVE	-0.00002	0.000022	-0.000043	-6.110E-06	0.000039	3.585E-06
48	SX	0.004663	0.002191	0.00001	0.000031	0.000763	0.000219
48	SY	0.002111	0.003784	7.833E-06	0.000036	0.000314	0.00078
48	WB	-2.880E-06	-3.078E-07	-4.679E-08	9.963E-08	-1.887E-06	8.416E-08
49	DEAD	0.	0.	0.	0.	0.	0.
49	LIVE	0.	0.	0.	0.	0.	0.
49	SX	0.	0.	0.	0.	0.	0.
49	SY	0.	0.	0.	0.	0.	0.
49	WB	0.	0.	0.	0.	0.	0.
50	DEAD	-5.494E-06	0.000048	-0.000117	5.301E-06	0.000076	4.910E-06
50	LIVE	-0.000031	0.000021	-0.000041	-1.318E-06	0.000051	4.248E-06
50	SX	0.004671	0.002156	0.00005	0.000051	0.000684	0.000216
50	SY	0.004044	0.003803	0.000063	0.000046	0.000371	0.000791
50	WB	-3.143E-06	-3.282E-07	-2.976E-08	1.261E-07	-1.210E-06	9.599E-08
51	DEAD	0.00002	-9.039E-06	-0.00041	0.000276	-0.000222	5.693E-06
51	LIVE	-9.474E-06	-0.000028	-0.000346	0.000246	-0.000188	4.853E-06
51	SX	0.004765	0.002014	0.000145	0.000135	0.000068	0.000215
51	SY	0.001889	0.011305	0.000235	0.000123	0.000121	0.000808
51	WB	-2.592E-06	-1.701E-06	-1.366E-06	3.773E-07	5.884E-07	1.088E-07
52	DEAD	0.000019	-1.163E-07	-0.000552	0.000239	0.00028	4.364E-06
52	LIVE	-0.000011	-0.000021	-0.000735	0.000366	0.000332	3.916E-06
52	SX	0.004754	0.001809	0.00005	0.000065	0.000024	0.000214
52	SY	0.00175	0.009925	0.000056	0.000023	0.00004	0.000815
52	WB	-2.621E-06	-1.475E-06	-0.000027	0.000014	0.000011	1.231E-07
53	DEAD	0.000014	-1.453E-07	-0.000351	0.000177	0.00028	4.824E-06
53	LIVE	-0.000014	-0.000021	-0.000431	0.000263	0.000332	4.348E-06
53	SX	0.004734	0.001809	0.000011	0.000065	0.000024	0.000214
53	SY	0.001497	0.009925	0.000046	0.000023	0.00004	0.000814
53	WB	-2.731E-06	-1.474E-06	-0.000016	9.470E-06	0.000011	1.305E-07
54	DEAD	6.693E-06	-3.080E-07	-0.000151	0.000123	0.000109	4.615E-06
54	LIVE	-0.000021	-0.000021	-0.000162	0.00015	0.000137	4.082E-06
54	SX	0.004716	0.00181	0.000189	0.000161	0.000128	0.000214
54	SY	0.00184	0.009925	0.000092	0.000144	0.000046	0.000812
54	WB	-2.940E-06	-1.477E-06	-6.553E-06	5.525E-06	5.499E-06	1.195E-07
55	DEAD	0.000032	-0.000029	-0.000667	1.928E-06	0.001224	4.502E-06
55	LIVE	1.139E-06	-0.000045	-0.000513	3.775E-06	0.001068	3.774E-06
55	SX	0.004872	0.002582	0.000012	0.000076	2.670E-06	0.000214
55	SY	0.003538	0.014244	0.000024	0.00041	5.036E-06	0.000812
55	WB	-2.307E-06	-2.116E-06	-1.965E-07	1.867E-07	6.879E-08	9.585E-08
56	DEAD	0.000032	-0.000024	-0.00176	6.527E-06	0.000962	5.175E-06

Table 28: Joint Displacements

Joint	OutputCase	U1	U2	U3	R1	R2	R3
		m	m	m	Radians	Radians	Radians
56	LIVE	9.268E-07	-0.000041	-0.001467	5.782E-06	0.000838	4.672E-06
56	SX	0.004871	0.002429	0.000016	0.000024	0.000012	0.000214
56	SY	0.003537	0.013516	0.000028	0.00014	4.619E-06	0.000808
56	WB	-2.308E-06	-2.009E-06	-2.560E-07	1.619E-07	4.354E-08	1.377E-07
57	DEAD	0.000032	-0.00002	-0.002389	0.000011	0.0004	4.417E-06
57	LIVE	9.946E-07	-0.000038	-0.002013	8.463E-06	0.000345	3.642E-06
57	SX	0.004871	0.002289	0.000032	8.329E-06	0.00002	0.000214
57	SY	0.003537	0.012818	0.000024	0.000015	0.000022	0.000812
57	WB	-2.307E-06	-1.909E-06	-2.753E-07	1.392E-07	6.370E-09	8.921E-08
58	DEAD	0.000032	-0.000015	-0.002476	0.000015	-0.000179	5.308E-06
58	LIVE	1.193E-06	-0.000034	-0.002086	0.000012	-0.000158	4.697E-06
58	SX	0.004871	0.002157	0.000047	8.203E-06	0.000013	0.000214
58	SY	0.003537	0.012124	0.000022	0.000025	0.000053	0.000809
58	WB	-2.305E-06	-1.812E-06	-2.779E-07	1.345E-07	2.763E-08	1.266E-07
59	DEAD	0.000032	-0.000011	-0.0021	0.000019	-0.000567	4.139E-06
59	LIVE	1.392E-06	-0.00003	-0.001758	0.000015	-0.000495	3.594E-06
59	SX	0.004871	0.002035	0.000049	0.000016	0.000017	0.000214
59	SY	0.003537	0.011433	0.000074	0.000095	0.000072	0.000812
59	WB	-2.304E-06	-1.707E-06	-3.473E-07	1.614E-07	1.738E-07	1.077E-07
60	DEAD	0.000033	-6.633E-06	-0.00153	0.00002	-0.000535	5.733E-06
60	LIVE	1.519E-06	-0.000026	-0.001261	0.000017	-0.000464	4.979E-06
60	SX	0.004871	0.001925	0.000035	0.000035	0.000036	0.000214
60	SY	0.003537	0.010748	0.000137	0.000186	0.00006	0.00081
60	WB	-2.301E-06	-1.605E-06	-6.057E-07	8.946E-08	4.037E-07	1.184E-07
61	DEAD	0.000033	-4.218E-06	-0.001311	0.000015	-0.000291	4.739E-06
61	LIVE	1.511E-06	-0.000024	-0.001072	0.000011	-0.000246	4.174E-06
61	SX	0.004871	0.001873	0.000028	0.000036	0.000037	0.000214
61	SY	0.003538	0.010395	0.00016	0.000187	0.000036	0.000812
61	WB	-2.299E-06	-1.550E-06	-8.253E-07	-1.210E-07	4.789E-07	1.169E-07
62	DEAD	0.000033	-2.134E-06	-0.001258	7.021E-06	-0.000048	4.779E-06
62	LIVE	1.517E-06	-0.000022	-0.001031	1.250E-06	-0.000029	4.163E-06
62	SX	0.004871	0.001828	0.00003	0.000033	0.000025	0.000215
62	SY	0.003538	0.010067	0.000168	0.000169	0.00001	0.00081
62	WB	-2.299E-06	-1.499E-06	-1.041E-06	-4.361E-07	4.921E-07	1.127E-07
63	DEAD	0.000033	2.328E-06	-0.001341	-0.000012	0.000093	4.969E-06
63	LIVE	1.677E-06	-0.000018	-0.001115	-0.000021	0.000094	4.350E-06
63	SX	0.004871	0.001746	0.000029	0.000013	9.819E-06	0.000214
63	SY	0.003538	0.009394	0.000139	0.000064	0.000052	0.000813
63	WB	-2.297E-06	-1.394E-06	-1.487E-06	-1.066E-06	5.122E-07	1.165E-07
64	DEAD	0.000033	6.802E-06	-0.001374	-0.000018	-0.000058	4.910E-06
64	LIVE	1.939E-06	-0.000014	-0.001154	-0.000027	-0.000041	4.263E-06
64	SX	0.004871	0.001683	0.000015	0.000012	0.000015	0.000214
64	SY	0.003538	0.008728	0.000081	0.00005	0.000063	0.000812
64	WB	-2.296E-06	-1.290E-06	-1.966E-06	-1.190E-06	5.506E-07	1.123E-07
65	DEAD	0.000033	0.000011	-0.001241	-0.000012	-0.000178	4.779E-06
65	LIVE	2.119E-06	-0.000011	-0.001045	-0.000019	-0.000148	4.173E-06
65	SX	0.004871	0.00164	6.358E-06	0.000033	0.000011	0.000214
65	SY	0.003538	0.008075	0.000033	0.000135	0.000041	0.000812
65	WB	-2.294E-06	-1.187E-06	-2.444E-06	-8.532E-07	3.942E-07	1.139E-07
66	DEAD	0.000033	0.000014	-0.001125	-7.158E-06	-0.000074	4.728E-06
66	LIVE	2.112E-06	-7.881E-06	-0.000948	-0.000012	-0.000058	4.058E-06
66	SX	0.004871	0.001622	0.000015	0.000045	0.000014	0.000214
66	SY	0.003538	0.0076	0.000016	0.000184	0.000024	0.000812
66	WB	-2.293E-06	-1.113E-06	-2.611E-06	-6.058E-07	-1.315E-08	1.063E-07

Table 28: Joint Displacements

Joint	OutputCase	U1	U2	U3	R1	R2	R3
		m	m	m	Radians	Radians	Radians
67	DEAD	0.000033	0.000019	-0.00117	-6.685E-06	0.000039	4.650E-06
67	LIVE	2.183E-06	-3.691E-06	-0.000997	-0.000012	0.00004	4.063E-06
67	SX	0.004871	0.00162	0.000017	0.000035	0.000012	0.000215
67	SY	0.003537	0.006883	0.000013	0.000136	0.000015	0.000812
67	WB	-2.290E-06	-9.997E-07	-2.270E-06	-6.106E-07	-3.754E-07	1.124E-07
68	DEAD	0.000033	0.000023	-0.001161	-6.367E-06	-0.00006	4.617E-06
68	LIVE	2.373E-06	-1.420E-07	-0.000989	-0.000012	-0.000058	3.902E-06
68	SX	0.004871	0.001641	3.622E-06	0.000038	0.000018	0.000213
68	SY	0.003537	0.006283	0.000018	0.000116	9.052E-06	0.000812
68	WB	-2.289E-06	-9.041E-07	-1.999E-06	-6.018E-07	-1.908E-07	9.918E-08
69	DEAD	0.000033	0.000028	-0.001092	-1.996E-06	0.000045	4.369E-06
69	LIVE	2.386E-06	3.786E-06	-0.000919	-5.753E-06	0.000032	3.783E-06
69	SX	0.004871	0.001693	0.000014	0.000053	0.000013	0.000214
69	SY	0.003537	0.005633	0.000012	0.000148	0.00002	0.000812
69	WB	-2.290E-06	-7.981E-07	-1.821E-06	-3.795E-07	-4.395E-07	1.066E-07
70	DEAD	0.000033	0.000032	-0.001232	4.424E-06	0.000139	4.733E-06
70	LIVE	2.449E-06	7.329E-06	-0.001037	3.311E-06	0.000114	4.032E-06
70	SX	0.004871	0.001763	0.000032	0.000033	0.000036	0.000214
70	SY	0.003536	0.005094	0.000025	0.00009	0.000029	0.00081
70	WB	-2.287E-06	-7.031E-07	-1.121E-06	-6.690E-08	-9.359E-07	1.007E-07
71	DEAD	0.000034	0.000036	-0.001307	0.00001	0.000015	4.167E-06
71	LIVE	2.700E-06	0.000011	-0.001093	0.000011	3.170E-06	3.580E-06
71	SX	0.00487	0.001848	0.000079	0.000018	0.000054	0.000214
71	SY	0.003536	0.004634	0.000054	0.00004	0.000034	0.000813
71	WB	-2.286E-06	-6.122E-07	-1.897E-07	1.234E-07	-1.012E-06	1.020E-07
72	DEAD	0.000034	0.00004	-0.001281	0.000017	9.774E-06	4.929E-06
72	LIVE	2.978E-06	0.000014	-0.001062	0.000018	1.388E-06	4.301E-06
72	SX	0.00487	0.001949	0.000121	0.000034	0.000021	0.000214
72	SY	0.003536	0.004252	0.000082	0.000067	0.000023	0.000807
72	WB	-2.286E-06	-5.191E-07	6.220E-07	3.406E-07	-6.452E-07	1.087E-07
73	DEAD	0.000034	0.000044	-0.001383	9.611E-06	0.000372	4.663E-06
73	LIVE	3.143E-06	0.000018	-0.001148	0.000011	0.000333	4.060E-06
73	SX	0.004871	0.00206	0.000112	0.000051	0.000042	0.000215
73	SY	0.003535	0.003979	0.000091	0.000099	0.000022	0.000812
73	WB	-2.284E-06	-4.268E-07	8.989E-07	4.284E-07	1.116E-07	1.056E-07
74	DEAD	0.000034	0.000048	-0.001967	-0.000028	0.00068	4.520E-06
74	LIVE	3.111E-06	0.000022	-0.001676	-0.000028	0.000614	3.931E-06
74	SX	0.004871	0.002192	0.000051	0.000036	0.000079	0.000214
74	SY	0.003535	0.003812	0.000075	0.000065	0.000035	0.000804
74	WB	-2.284E-06	-3.287E-07	3.978E-07	1.110E-07	7.463E-07	1.032E-07
75	DEAD	0.000034	0.000053	-0.002531	-0.000062	0.000454	4.618E-06
75	LIVE	3.242E-06	0.000025	-0.002184	-0.000065	0.00041	4.079E-06
75	SX	0.004872	0.002329	0.000035	0.000018	0.000068	0.000216
75	SY	0.003534	0.00379	0.000056	0.00002	0.00003	0.000809
75	WB	-2.285E-06	-2.332E-07	-3.363E-07	-1.944E-07	7.053E-07	1.094E-07
76	DEAD	0.000035	0.000057	-0.002734	-0.000071	-0.000056	4.826E-06
76	LIVE	3.452E-06	0.000029	-0.002369	-0.000076	-0.000046	4.237E-06
76	SX	0.004872	0.002476	0.000078	0.000011	0.000032	0.000215
76	SY	0.003533	0.003908	0.000047	0.000023	0.00002	0.000804
76	WB	-2.286E-06	-1.383E-07	-8.039E-07	-1.655E-07	2.846E-07	1.066E-07
77	DEAD	0.000035	0.000061	-0.002415	-0.000057	-0.000655	3.938E-06
77	LIVE	3.601E-06	0.000032	-0.002086	-0.000062	-0.000583	3.469E-06
77	SX	0.004872	0.002629	0.000087	0.000011	0.000026	0.000216
77	SY	0.003533	0.004151	0.000051	0.000021	0.000038	0.000806

Table 28: Joint Displacements

Joint	OutputCase	U1	U2	U3	R1	R2	R3
		m	m	m	Radians	Radians	Radians
77	WB	-2.287E-06	-4.581E-08	-8.495E-07	1.423E-09	-1.317E-07	1.030E-07
78	DEAD	0.000035	0.000065	-0.001572	-0.000042	-0.001159	5.351E-06
78	LIVE	3.599E-06	0.000036	-0.001334	-0.000043	-0.001036	4.712E-06
78	SX	0.004872	0.002787	0.000069	0.000046	0.000055	0.000215
78	SY	0.003533	0.004499	0.00008	0.000063	0.000052	0.000804
78	WB	-2.287E-06	4.821E-08	-6.012E-07	1.244E-07	-3.560E-07	1.099E-07
79	DEAD	0.000035	0.000068	-0.000633	-0.000052	-0.001322	3.506E-06
79	LIVE	3.388E-06	0.000039	-0.000493	-0.000048	-0.001183	3.051E-06
79	SX	0.004872	0.002917	0.00007	0.000093	0.000059	0.000215
79	SY	0.003534	0.004837	0.000114	0.000149	0.000054	0.000807
79	WB	-2.287E-06	1.248E-07	-3.144E-07	1.801E-07	-4.033E-07	1.039E-07
80	DEAD	0.000043	-0.000024	-0.000373	-0.000781	0.00029	4.623E-06
80	LIVE	0.000011	-0.000041	-0.000301	-0.000636	0.000244	3.801E-06
80	SX	0.005032	0.002429	0.000276	0.000174	0.000118	0.000214
80	SY	0.005464	0.013516	0.000284	0.00031	0.000101	0.000811
80	WB	-2.021E-06	-2.009E-06	-7.751E-07	2.259E-07	-4.545E-09	9.290E-08
81	DEAD	0.000044	-0.00002	-0.000626	-0.000999	0.000176	5.212E-06
81	LIVE	0.000011	-0.000037	-0.000513	-0.000825	0.000149	4.639E-06
81	SX	0.005032	0.002289	0.000223	0.000123	0.000144	0.000214
81	SY	0.005465	0.012818	0.000221	0.000128	0.000152	0.000809
81	WB	-2.020E-06	-1.909E-06	-8.491E-07	2.679E-07	1.296E-07	1.302E-07
82	DEAD	0.000044	-0.000015	-0.000685	-0.001017	-0.000059	4.249E-06
82	LIVE	0.000012	-0.000034	-0.000565	-0.000839	-0.000047	3.618E-06
82	SX	0.005032	0.002157	0.000024	0.000013	0.000214	0.000214
82	SY	0.005466	0.012124	0.000018	0.000016	0.000214	0.000811
82	WB	-2.018E-06	-1.807E-06	-1.005E-06	3.425E-07	1.735E-07	1.018E-07
83	DEAD	0.000045	-0.000011	-0.000522	-0.000894	-0.00024	5.377E-06
83	LIVE	0.000012	-0.00003	-0.000429	-0.000731	-0.000201	4.702E-06
83	SX	0.005033	0.002035	0.000155	0.000135	0.000098	0.000214
83	SY	0.005466	0.011433	0.000157	0.000071	0.000089	0.00081
83	WB	-2.016E-06	-1.706E-06	-1.158E-06	3.724E-07	1.187E-07	1.203E-07
84	DEAD	0.000045	-7.367E-06	-0.000261	-0.000711	-0.000199	2.848E-06
84	LIVE	0.000012	-0.000027	-0.000211	-0.000574	-0.000168	2.601E-06
84	SX	0.005033	0.001925	0.000145	0.000138	0.000211	0.000214
84	SY	0.005467	0.010747	0.000135	0.000197	0.000221	0.000812
84	WB	-2.015E-06	-1.600E-06	-1.214E-06	3.271E-07	-4.349E-08	1.130E-07
85	DEAD	0.000045	-2.976E-06	-0.000191	-0.000578	0.000038	6.681E-06
85	LIVE	0.000013	-0.000023	-0.000151	-0.000461	0.00003	5.699E-06
85	SX	0.005033	0.001827	0.000115	0.000096	0.000206	0.000214
85	SY	0.005468	0.010066	0.000124	0.000365	0.000193	0.000812
85	WB	-2.014E-06	-1.497E-06	-1.105E-06	2.256E-07	-1.338E-07	1.132E-07
86	DEAD	0.000045	2.238E-06	-0.000265	-0.000575	0.000048	4.765E-06
86	LIVE	0.000013	-0.000018	-0.000212	-0.000456	0.00004	4.151E-06
86	SX	0.005034	0.001746	0.000107	0.000084	0.000101	0.000214
86	SY	0.005469	0.009393	0.000103	0.000217	0.000109	0.000811
86	WB	-2.013E-06	-1.394E-06	-1.025E-06	1.355E-07	-4.816E-08	1.131E-07
87	DEAD	0.000045	6.697E-06	-0.000274	-0.000587	-0.00004	5.052E-06
87	LIVE	0.000013	-0.000015	-0.00022	-0.00047	-0.000033	4.389E-06
87	SX	0.005034	0.001683	0.000057	0.000045	0.000144	0.000214
87	SY	0.005469	0.008728	0.000062	0.000065	0.000138	0.000812
87	WB	-2.013E-06	-1.290E-06	-1.017E-06	-7.991E-08	3.975E-09	1.135E-07
88	DEAD	0.000045	0.000011	-0.000194	-0.000555	-0.000086	3.576E-06
88	LIVE	0.000013	-0.000011	-0.000153	-0.000452	-0.000072	3.201E-06
88	SX	0.005035	0.00164	0.000141	0.000122	0.000079	0.000214

Table 28: Joint Displacements

Joint	OutputCase	U1	U2	U3	R1	R2	R3
		m	m	m	Radians	Radians	Radians
88	SY	0.005469	0.008075	0.000136	0.000105	0.00009	0.000812
88	WB	-2.014E-06	-1.186E-06	-1.028E-06	-3.848E-07	-2.817E-08	1.159E-07
89	DEAD	0.000045	0.000019	-0.000174	-0.000517	0.000023	5.757E-06
89	LIVE	0.000013	-4.005E-06	-0.000137	-0.000424	0.00002	4.838E-06
89	SX	0.005036	0.00162	0.000069	0.000056	0.000064	0.000213
89	SY	0.005468	0.006883	0.000072	0.000181	0.000071	0.000812
89	WB	-2.017E-06	-9.999E-07	-9.620E-07	-5.456E-07	9.535E-09	9.905E-08
90	DEAD	0.000045	0.000023	-0.000172	-0.000514	-0.000026	3.454E-06
90	LIVE	0.000012	-4.781E-07	-0.000135	-0.000421	-0.000022	3.104E-06
90	SX	0.005037	0.001642	0.00007	0.000083	0.000067	0.000214
90	SY	0.005468	0.006284	0.000067	0.000091	0.000064	0.000812
90	WB	-2.018E-06	-9.046E-07	-9.929E-07	-4.125E-07	1.003E-08	1.154E-07
91	DEAD	0.000045	0.000032	-0.000208	-0.000545	0.000069	5.199E-06
91	LIVE	0.000013	7.090E-06	-0.000165	-0.000443	0.000059	4.429E-06
91	SX	0.005039	0.001763	0.000125	0.000065	0.000022	0.000214
91	SY	0.005465	0.005095	0.000124	0.000171	0.000031	0.000812
91	WB	-2.020E-06	-7.003E-07	-9.545E-07	-2.750E-08	4.785E-08	1.013E-07
92	DEAD	0.000045	0.000036	-0.000248	-0.000573	-1.152E-06	4.858E-06
92	LIVE	0.000013	0.000011	-0.0002	-0.000461	2.582E-07	4.198E-06
92	SX	0.005041	0.001849	0.000011	0.000065	0.000149	0.000214
92	SY	0.005464	0.004636	0.000016	0.000066	0.00015	0.000808
92	WB	-2.019E-06	-6.091E-07	-1.043E-06	4.154E-07	1.013E-07	1.053E-07
93	DEAD	0.000045	0.00004	-0.000207	-0.000578	-0.000048	3.040E-06
93	LIVE	0.000013	0.000014	-0.000166	-0.000465	-0.00004	2.695E-06
93	SX	0.005042	0.001951	0.000132	0.000184	0.000012	0.000215
93	SY	0.005462	0.004255	0.000134	0.00015	0.000017	0.000812
93	WB	-2.018E-06	-5.152E-07	-1.133E-06	7.573E-07	4.313E-08	1.058E-07
94	DEAD	0.000046	0.000048	-0.000415	-0.000848	0.000287	5.855E-06
94	LIVE	0.000013	0.000021	-0.000341	-0.000709	0.000242	5.039E-06
94	SX	0.005046	0.002194	0.000188	0.000111	0.000032	0.000215
94	SY	0.005457	0.003815	0.000187	0.00019	0.000029	0.00081
94	WB	-2.016E-06	-3.273E-07	-9.993E-07	6.794E-07	-1.144E-07	1.036E-07
95	DEAD	0.000046	0.000053	-0.000677	-0.00102	0.00019	4.562E-06
95	LIVE	0.000014	0.000025	-0.000561	-0.000865	0.000159	3.985E-06
95	SX	0.005047	0.002331	0.000085	0.000078	0.000178	0.000215
95	SY	0.005456	0.003793	0.000081	0.000091	0.00018	0.000805
95	WB	-2.016E-06	-2.342E-07	-9.109E-07	4.226E-07	-7.247E-08	1.042E-07
96	DEAD	0.000047	0.000057	-0.00075	-0.001097	-0.000053	4.506E-06
96	LIVE	0.000014	0.000029	-0.000623	-0.000935	-0.000046	3.962E-06
96	SX	0.005048	0.002477	0.000126	0.000033	0.000209	0.000216
96	SY	0.005454	0.003909	0.00013	0.000051	0.000209	0.000807
96	WB	-2.015E-06	-1.403E-07	-8.689E-07	1.616E-07	-2.831E-08	1.057E-07
97	DEAD	0.000047	0.000061	-0.000582	-0.001016	-0.000269	5.072E-06
97	LIVE	0.000014	0.000032	-0.00048	-0.00086	-0.000228	4.473E-06
97	SX	0.005049	0.002629	0.000285	0.000145	0.000064	0.000215
97	SY	0.005452	0.004151	0.000289	0.000176	0.000063	0.000805
97	WB	-2.014E-06	-4.518E-08	-8.587E-07	4.654E-08	-1.570E-08	1.092E-07
98	DEAD	0.000048	0.000065	-0.000275	-0.000706	-0.000284	3.720E-06
98	LIVE	0.000015	0.000036	-0.000219	-0.000584	-0.000241	3.330E-06
98	SX	0.005049	0.002787	0.000234	0.00018	0.000266	0.000216
98	SY	0.005451	0.004498	0.000236	0.000237	0.000266	0.000806
98	WB	-2.012E-06	4.960E-08	-8.386E-07	9.905E-08	-5.565E-08	1.045E-07
99	DEAD	0.000019	-0.000024	-0.000361	0.000781	0.000287	4.226E-06
99	LIVE	-0.00001	-0.000041	-0.000287	0.000638	0.000249	3.351E-06

Table 28: Joint Displacements

Joint	OutputCase	U1	U2	U3	R1	R2	R3
		m	m	m	Radians	Radians	Radians
99	SX	0.004765	0.002429	0.000276	0.000179	0.000124	0.000214
99	SY	0.001888	0.013516	0.000149	0.000107	0.000142	0.000814
99	WB	-2.597E-06	-2.013E-06	1.413E-07	1.745E-07	7.728E-08	7.066E-08
100	DEAD	0.00002	-0.00002	-0.000602	0.000996	0.000149	5.345E-06
100	LIVE	-9.833E-06	-0.000038	-0.000498	0.00082	0.000134	4.945E-06
100	SX	0.004765	0.002289	0.000238	0.000123	0.000129	0.000215
100	SY	0.001888	0.012817	0.000236	0.00012	0.000097	0.000807
100	WB	-2.594E-06	-1.920E-06	-1.285E-07	2.030E-08	4.421E-07	1.508E-07
101	DEAD	0.00002	-0.000015	-0.00063	0.001037	-0.000083	4.541E-06
101	LIVE	-9.662E-06	-0.000034	-0.000528	0.000851	-0.000065	3.830E-06
101	SX	0.004765	0.002157	0.00007	0.00003	0.000201	0.000214
101	SY	0.001888	0.012124	0.000275	0.000174	0.000067	0.000812
101	WB	-2.593E-06	-1.811E-06	-6.476E-07	-3.307E-07	6.295E-07	9.798E-08
102	DEAD	0.00002	-0.000011	-0.000456	0.000908	-0.00022	6.037E-06
102	LIVE	-9.519E-06	-0.00003	-0.000385	0.000735	-0.000185	5.202E-06
102	SX	0.004765	0.002035	0.000128	0.000105	0.000105	0.000214
102	SY	0.001889	0.011434	0.00025	0.000137	0.000099	0.000808
102	WB	-2.592E-06	-1.715E-06	-1.254E-06	-7.598E-07	6.175E-07	1.161E-07
103	DEAD	0.00002	-5.791E-06	-0.000248	0.000684	-0.000141	4.922E-06
103	LIVE	-9.429E-06	-0.000026	-0.000207	0.000546	-0.000117	4.280E-06
103	SX	0.004765	0.001925	0.000129	0.000093	0.000187	0.000214
103	SY	0.001889	0.010749	0.000103	0.00004	0.000128	0.000811
103	WB	-2.593E-06	-1.610E-06	-1.708E-06	-9.008E-07	8.439E-07	1.130E-07
104	DEAD	0.00002	-1.459E-06	-0.000243	0.000527	0.000117	3.801E-06
104	LIVE	-9.217E-06	-0.000022	-0.000221	0.000405	0.00014	3.495E-06
104	SX	0.004765	0.001828	0.000108	0.000101	0.000188	0.000214
104	SY	0.001888	0.010068	0.000057	0.000044	0.000061	0.000815
104	WB	-2.591E-06	-1.505E-06	-3.946E-06	-1.618E-06	4.211E-06	1.261E-07
105	DEAD	0.000021	2.539E-06	-0.000411	0.00048	0.000118	5.170E-06
105	LIVE	-8.953E-06	-0.000018	-0.000416	0.000332	0.00014	4.512E-06
105	SX	0.004765	0.001746	0.000093	0.000079	0.000098	0.000214
105	SY	0.001888	0.009393	0.000039	0.000045	0.000046	0.000811
105	WB	-2.585E-06	-1.394E-06	-9.306E-06	-4.668E-06	3.976E-06	1.163E-07
106	DEAD	0.000021	6.894E-06	-0.000443	0.000486	-0.00007	4.600E-06
106	LIVE	-8.749E-06	-0.000014	-0.000457	0.000333	-0.000075	4.053E-06
106	SX	0.004765	0.001683	0.000057	0.00003	0.000128	0.000214
106	SY	0.001888	0.008728	0.000023	0.000014	0.000054	0.000812
106	WB	-2.580E-06	-1.290E-06	-0.000011	-5.228E-06	-1.741E-06	1.160E-07
107	DEAD	0.000021	0.000012	-0.000279	0.000513	-0.000178	6.111E-06
107	LIVE	-8.446E-06	-0.00001	-0.000273	0.000395	-0.000202	5.170E-06
107	SX	0.004764	0.00164	0.000131	0.000083	0.000078	0.000214
107	SY	0.001888	0.008075	0.000055	0.000142	0.000027	0.000813
107	WB	-2.573E-06	-1.191E-06	-5.796E-06	-1.753E-06	-5.270E-06	1.037E-07
108	DEAD	0.000022	0.000019	-0.000279	0.000435	0.000085	3.621E-06
108	LIVE	-7.836E-06	-3.450E-06	-0.000286	0.000316	0.000108	3.166E-06
108	SX	0.004762	0.001619	0.000062	0.000081	0.000067	0.000213
108	SY	0.001887	0.006881	0.000024	0.000135	0.000022	0.000813
108	WB	-2.558E-06	-1.002E-06	-6.897E-06	-3.389E-06	3.533E-06	1.086E-07
109	DEAD	0.000022	0.000024	-0.0003	0.000419	-0.000058	5.582E-06
109	LIVE	-7.631E-06	1.023E-07	-0.000318	0.000293	-0.000068	4.810E-06
109	SX	0.004761	0.001641	0.000071	0.000055	0.000061	0.000215
109	SY	0.001887	0.006283	0.000026	0.000133	0.000026	0.00081
109	WB	-2.550E-06	-9.050E-07	-8.247E-06	-4.466E-06	-1.752E-06	1.081E-07
110	DEAD	0.000022	0.000032	-0.000196	0.00055	0.000052	3.242E-06

Table 28: Joint Displacements

Joint	OutputCase	U1	U2	U3	R1	R2	R3
		m	m	m	Radians	Radians	Radians
110	LIVE	-7.301E-06	7.557E-06	-0.000152	0.000451	0.000037	2.846E-06
110	SX	0.004759	0.001763	0.000115	0.000087	0.000032	0.000214
110	SY	0.001887	0.005094	0.000043	0.000077	0.000013	0.000812
110	WB	-2.543E-06	-7.060E-07	-7.727E-07	3.050E-07	-5.818E-07	1.060E-07
111	DEAD	0.000022	0.000036	-0.000234	0.000567	0.000013	4.868E-06
111	LIVE	-7.430E-06	0.000011	-0.000184	0.000456	0.000015	4.209E-06
111	SX	0.004757	0.001849	0.000025	0.000055	0.000153	0.000214
111	SY	0.001886	0.004635	9.047E-06	0.000024	0.000056	0.000808
111	WB	-2.547E-06	-6.118E-07	-8.700E-07	-5.293E-07	4.719E-07	1.059E-07
112	DEAD	0.000022	0.00004	-0.000219	0.000538	-4.775E-06	5.251E-06
112	LIVE	-7.621E-06	0.000014	-0.000179	0.000422	5.501E-06	4.398E-06
112	SX	0.004754	0.001949	0.000149	0.000176	8.934E-06	0.000214
112	SY	0.001886	0.004251	0.000054	0.000063	6.219E-06	0.000817
112	WB	-2.552E-06	-5.213E-07	-1.594E-06	-1.816E-06	7.841E-07	9.364E-08
113	DEAD	0.000022	0.000049	-0.000647	0.000724	0.000511	4.147E-06
113	LIVE	-7.228E-06	0.000022	-0.00056	0.000594	0.00044	3.842E-06
113	SX	0.004749	0.002187	0.000216	0.00011	0.000106	0.000217
113	SY	0.001884	0.003803	0.000079	0.000044	0.000033	0.000814
113	WB	-2.560E-06	-3.233E-07	-2.011E-06	-1.708E-06	-6.631E-07	1.256E-07
114	DEAD	0.000023	0.000053	-0.001133	0.000738	0.000403	4.784E-06
114	LIVE	-6.641E-06	0.000025	-0.000974	0.000657	0.000342	4.160E-06
114	SX	0.004748	0.002326	0.000198	0.000132	0.000095	0.000215
114	SY	0.001883	0.003785	0.000065	0.000048	0.000048	0.000801
114	WB	-2.559E-06	-2.261E-07	-1.089E-06	9.707E-07	-8.708E-07	1.007E-07
115	DEAD	0.000024	0.000057	-0.001356	0.000688	0.000017	4.158E-06
115	LIVE	-6.211E-06	0.000029	-0.00116	0.000625	8.333E-06	3.617E-06
115	SX	0.004747	0.002475	0.000052	0.000143	0.000184	0.000217
115	SY	0.001882	0.003906	0.000034	0.000054	0.00007	0.000803
115	WB	-2.557E-06	-1.382E-07	-4.582E-07	8.477E-07	-4.976E-07	9.787E-08
116	DEAD	0.000024	0.000061	-0.001156	0.000549	-0.000412	5.033E-06
116	LIVE	-5.748E-06	0.000033	-0.000982	0.000502	-0.000361	4.418E-06
116	SX	0.004747	0.002629	0.000127	0.000095	0.00014	0.000216
116	SY	0.00188	0.004151	0.000071	0.000039	0.000047	0.000802
116	WB	-2.556E-06	-4.714E-08	-1.827E-07	5.562E-07	-2.062E-07	1.041E-07
117	DEAD	0.000025	0.000065	-0.00062	0.000334	-0.000582	3.745E-06
117	LIVE	-5.199E-06	0.000036	-0.000514	0.000303	-0.000508	3.265E-06
117	SX	0.004746	0.002789	0.000194	0.000053	0.000095	0.000216
117	SY	0.001878	0.004499	0.000083	0.00002	0.000047	0.000803
117	WB	-2.556E-06	4.413E-08	-7.304E-08	2.739E-07	-1.501E-07	9.873E-08
118	DEAD	0.000019	-0.000021	-0.000554	0.000187	0.000206	5.395E-06
118	LIVE	-9.852E-06	-0.000039	-0.000456	0.000165	0.000182	5.047E-06
118	SX	0.004765	0.002325	0.000268	0.000162	0.000082	0.000215
118	SY	0.001888	0.012995	0.000218	0.000158	0.000105	0.000806
118	WB	-2.594E-06	-1.978E-06	-2.753E-08	-2.853E-07	3.637E-07	1.573E-07
119	DEAD	0.000021	3.671E-06	-0.000432	-0.000114	0.000087	5.646E-06
119	LIVE	-8.896E-06	-0.000017	-0.000443	-0.00021	0.000104	4.980E-06
119	SX	0.004765	0.001733	0.000067	0.000048	0.000121	0.000214
119	SY	0.001888	0.009266	0.000028	0.000018	0.000054	0.000811
119	WB	-2.583E-06	-1.371E-06	-0.00001	-0.000012	3.008E-06	1.256E-07
120	DEAD	0.000021	8.926E-06	-0.000401	-0.000307	-0.000141	4.645E-06
120	LIVE	-8.689E-06	-0.000013	-0.000412	-0.000451	-0.000158	4.131E-06
120	SX	0.004764	0.001665	0.000105	0.000103	0.000078	0.000215
120	SY	0.001888	0.008476	0.000043	0.000033	0.000035	0.000807
120	WB	-2.578E-06	-1.243E-06	-9.572E-06	-0.00002	-3.999E-06	1.174E-07

Table 28: Joint Displacements

Joint	OutputCase	U1	U2	U3	R1	R2	R3
		m	m	m	Radians	Radians	Radians
121	DEAD	0.000022	0.00002	-0.000293	-0.000515	0.000067	4.819E-06
121	LIVE	-7.798E-06	-2.927E-06	-0.000305	-0.000734	0.000087	4.305E-06
121	SX	0.004762	0.00162	0.000045	0.000063	0.000089	0.000214
121	SY	0.001887	0.006792	0.000018	0.000028	0.000031	0.000812
121	WB	-2.557E-06	-9.862E-07	-7.541E-06	-0.000031	2.958E-06	1.250E-07
122	DEAD	0.000022	0.000025	-0.00027	-0.000674	-0.000105	5.166E-06
122	LIVE	-7.585E-06	1.766E-06	-0.000284	-0.000968	-0.00013	4.754E-06
122	SX	0.004761	0.001655	0.000094	3.963E-06	0.000025	0.000217
122	SY	0.001887	0.006087	0.000037	0.00002	0.00001	0.000804
122	WB	-2.549E-06	-8.587E-07	-7.459E-06	-0.00004	-3.949E-06	1.281E-07
123	DEAD	-0.000017	-0.000027	-0.000201	0.000557	0.000111	7.615E-06
123	LIVE	-0.000043	-0.000045	-0.000144	0.000453	0.000092	6.962E-06
123	SX	0.004778	0.00243	0.00016	0.000152	6.442E-06	0.000216
123	SY	0.00373	0.013494	0.00013	0.000215	0.00001	0.000796
123	WB	-3.418E-06	-2.133E-06	9.139E-08	3.356E-07	4.034E-08	1.724E-07
124	DEAD	-0.000017	-0.000021	-0.000273	0.000672	9.854E-06	5.497E-06
124	LIVE	-0.000042	-0.00004	-0.000205	0.000554	9.589E-06	4.874E-06
124	SX	0.004778	0.00229	0.000018	9.194E-06	0.000177	0.000215
124	SY	0.00373	0.012805	0.00002	0.000027	0.000132	0.000806
124	WB	-3.418E-06	-1.998E-06	-4.706E-08	4.490E-07	1.511E-07	1.286E-07
125	DEAD	-0.000017	-0.000015	-0.000218	0.000573	-0.000104	8.030E-06
125	LIVE	-0.000042	-0.000034	-0.00016	0.000473	-0.000085	7.213E-06
125	SX	0.004778	0.002158	0.000146	0.000136	0.000042	0.000216
125	SY	0.00373	0.012121	0.000099	0.000072	0.000027	0.000795
125	WB	-3.417E-06	-1.864E-06	-1.713E-07	7.153E-07	2.353E-08	1.666E-07
126	DEAD	-1.920E-06	-0.000033	-0.000452	-2.312E-06	0.000727	7.968E-06
126	LIVE	-0.000029	-0.00005	-0.000334	-3.206E-06	0.000633	7.225E-06
126	SX	0.004733	0.002583	0.000018	0.000069	6.986E-06	0.000216
126	SY	0.002206	0.014212	7.141E-06	0.000372	0.000022	0.000795
126	WB	-3.085E-06	-2.271E-06	9.535E-09	-1.339E-07	3.564E-07	1.727E-07
127	DEAD	0.000013	-0.000027	-0.000239	-0.000537	0.000145	8.584E-06
127	LIVE	-0.000016	-0.000045	-0.000181	-0.000434	0.000125	7.873E-06
127	SX	0.004736	0.00243	0.000154	0.00013	7.236E-06	0.000216
127	SY	0.001491	0.013495	0.000053	0.00011	0.000013	0.000793
127	WB	-2.755E-06	-2.128E-06	-1.476E-07	-1.260E-07	1.962E-07	1.927E-07
128	DEAD	0.000013	-0.000022	-0.000325	0.00018	0.000063	5.529E-06
128	LIVE	-0.000016	-0.00004	-0.000256	0.000155	0.000057	4.635E-06
128	SX	0.004736	0.002325	0.000064	0.000164	0.000159	0.000215
128	SY	0.001491	0.012993	0.000024	0.000159	0.000052	0.000808
128	WB	-2.754E-06	-1.988E-06	-3.866E-07	-2.874E-07	3.923E-07	9.851E-08
129	DEAD	0.000013	-0.000021	-0.000337	-0.000635	0.000019	4.865E-06
129	LIVE	-0.000016	-0.000039	-0.000267	-0.000519	0.00002	4.163E-06
129	SX	0.004736	0.00229	0.000013	0.000012	0.000176	0.000215
129	SY	0.001491	0.012807	9.793E-06	0.00004	0.000057	0.00081
129	WB	-2.753E-06	-1.988E-06	-4.939E-07	-2.543E-07	4.169E-07	1.055E-07
130	DEAD	0.000013	-0.000015	-0.000276	-0.000535	-0.000114	7.755E-06
130	LIVE	-0.000016	-0.000034	-0.000219	-0.000439	-0.000094	7.001E-06
130	SX	0.004736	0.002158	0.000151	0.000145	0.000044	0.000216
130	SY	0.001491	0.012121	0.000047	0.000051	0.000016	0.000797
130	WB	-2.751E-06	-1.863E-06	-8.853E-07	-4.828E-07	3.110E-07	1.666E-07
131	DEAD	-1.923E-06	-8.157E-06	-0.000397	-0.000012	-0.000752	8.202E-06
131	LIVE	-0.000029	-0.000028	-0.000323	-4.624E-06	-0.000634	7.345E-06
131	SX	0.004733	0.002014	0.000048	0.000051	0.000014	0.000216
131	SY	0.002207	0.011311	0.000174	0.000257	0.000083	0.000793

Table 28: Joint Displacements

Joint	OutputCase	U1	U2	U3	R1	R2	R3
		m	m	m	Radians	Radians	Radians
131	WB	-3.084E-06	-1.705E-06	-2.607E-06	4.618E-07	1.109E-06	1.664E-07
132	DEAD	-2.076E-06	-0.000027	-0.001094	9.050E-06	0.000506	5.287E-06
132	LIVE	-0.000029	-0.000045	-0.000895	8.656E-06	0.000443	4.638E-06
132	SX	0.004733	0.00243	0.000022	0.000017	0.000013	0.000215
132	SY	0.002206	0.013494	0.000022	0.000093	0.000024	0.000807
132	WB	-3.085E-06	-2.132E-06	-3.394E-07	3.707E-09	4.142E-07	1.205E-07
133	DEAD	-1.967E-06	-0.000021	-0.001351	0.000013	0.000026	8.047E-06
133	LIVE	-0.000029	-0.00004	-0.001123	0.000013	0.000031	7.312E-06
133	SX	0.004733	0.00229	8.994E-06	4.268E-06	0.000034	0.000216
133	SY	0.002206	0.012806	0.000046	0.00002	0.000039	0.000796
133	WB	-3.084E-06	-1.998E-06	-7.781E-07	1.027E-07	6.016E-07	1.757E-07
134	DEAD	-1.848E-06	-0.000015	-0.001138	8.152E-06	-0.000474	5.302E-06
134	LIVE	-0.000029	-0.000034	-0.000949	0.00001	-0.000397	4.720E-06
134	SX	0.004733	0.002158	0.000038	8.704E-06	0.000022	0.000215
134	SY	0.002206	0.01212	0.000091	0.000046	0.000065	0.000807
134	WB	-3.084E-06	-1.862E-06	-1.450E-06	2.015E-07	9.056E-07	1.295E-07
135	DEAD	0.000014	-3.409E-06	-0.000113	0.000014	0.000345	4.794E-06
135	LIVE	-0.000014	-0.000023	-0.000139	-1.365E-06	0.000421	4.262E-06
135	SX	0.004735	0.00188	0.000014	0.000021	0.000024	0.000214
135	SY	0.001497	0.010448	0.000067	0.000111	0.000032	0.000812
135	WB	-2.732E-06	-1.563E-06	-6.476E-06	-1.549E-06	0.000014	1.228E-07
136	DEAD	0.000015	3.792E-06	-0.00053	0.000031	0.000167	4.349E-06
136	LIVE	-0.000014	-0.000017	-0.000634	0.000011	0.000197	3.844E-06
136	SX	0.004733	0.001733	0.000026	0.000015	6.649E-06	0.000214
136	SY	0.001497	0.009267	9.558E-06	0.000026	0.000038	0.000811
136	WB	-2.726E-06	-1.369E-06	-0.000022	-2.519E-06	6.232E-06	1.150E-07
137	DEAD	0.000015	8.904E-06	-0.000685	-3.428E-06	0.000166	5.092E-06
137	LIVE	-0.000014	-0.000013	-0.000836	-0.000029	0.000234	4.476E-06
137	SX	0.004732	0.001665	4.411E-06	0.000042	0.000013	0.000214
137	SY	0.001496	0.008476	0.000022	0.000015	0.000013	0.000815
137	WB	-2.720E-06	-1.243E-06	-0.000029	-3.625E-06	9.089E-06	1.199E-07
138	DEAD	0.000015	0.000013	-0.000828	0.000467	0.000108	4.610E-06
138	LIVE	-0.000014	-9.302E-06	-0.001044	0.000652	0.000163	4.019E-06
138	SX	0.00473	0.001633	4.773E-06	0.000031	2.803E-06	0.000214
138	SY	0.001496	0.007917	0.000024	0.000023	3.305E-06	0.000811
138	WB	-2.715E-06	-1.155E-06	-0.000038	0.000024	6.830E-06	1.109E-07
139	DEAD	0.000016	0.000017	-0.000841	0.000488	-0.000056	4.694E-06
139	LIVE	-0.000013	-5.671E-06	-0.001075	0.000684	-0.000064	4.017E-06
139	SX	0.004729	0.001617	5.951E-06	8.964E-06	0.000014	0.000213
139	SY	0.001496	0.00728	0.000016	0.000013	0.000011	0.000818
139	WB	-2.709E-06	-1.058E-06	-0.000039	0.000025	-1.839E-06	1.059E-07
140	DEAD	0.000016	0.00002	-0.000766	-0.00004	-0.000021	4.724E-06
140	LIVE	-0.000013	-2.855E-06	-0.000979	-0.000068	-0.000013	4.154E-06
140	SX	0.004728	0.001621	0.000019	0.000024	0.000036	0.000215
140	SY	0.001495	0.006792	0.00001	9.060E-06	0.000015	0.000809
140	WB	-2.703E-06	-9.836E-07	-0.000036	-4.233E-06	3.659E-07	1.108E-07
141	DEAD	0.000016	0.000025	-0.000914	-0.000079	0.000385	4.782E-06
141	LIVE	-0.000013	1.709E-06	-0.001212	-0.000126	0.000577	4.148E-06
141	SX	0.004725	0.001655	0.000088	0.000022	0.0001	0.000213
141	SY	0.001495	0.006085	0.000028	0.000013	0.000035	0.000814
141	WB	-2.698E-06	-8.594E-07	-0.000047	-6.422E-06	0.000024	1.145E-07
142	DEAD	0.000016	0.000029	-0.001326	0.000774	0.000505	4.888E-06
142	LIVE	-0.000013	4.746E-06	-0.001824	0.001103	0.00076	4.243E-06
142	SX	0.004723	0.001693	0.000179	0.00014	0.000125	0.000213

Table 28: Joint Displacements

Joint	OutputCase	U1	U2	U3	R1	R2	R3
		m	m	m	Radians	Radians	Radians
142	SY	0.001494	0.00563	0.000058	0.000046	0.000044	0.000813
142	WB	-2.695E-06	-7.780E-07	-0.000072	0.000044	0.000032	1.103E-07
143	DEAD	0.000016	0.000033	-0.001694	0.001104	0.000159	4.408E-06
143	LIVE	-0.000013	8.509E-06	-0.002392	0.001639	0.000267	3.735E-06
143	SX	0.004721	0.001761	0.000293	0.000221	0.000099	0.000212
143	SY	0.001494	0.005088	0.000098	0.000076	0.000036	0.000815
143	WB	-2.693E-06	-6.774E-07	-0.000096	0.000066	0.000012	1.031E-07
144	DEAD	0.000017	0.000037	-0.001611	0.001028	-0.00035	4.922E-06
144	LIVE	-0.000012	0.000012	-0.002302	0.001559	-0.000481	4.259E-06
144	SX	0.004718	0.001845	0.000358	0.000196	0.000039	0.000214
144	SY	0.001493	0.004626	0.000122	0.000071	0.000016	0.00081
144	WB	-2.691E-06	-5.833E-07	-0.000093	0.000063	-0.000018	1.056E-07
145	DEAD	0.000017	0.000041	-0.001081	0.000641	-0.000725	3.933E-06
145	LIVE	-0.000012	0.000016	-0.001547	0.001003	-0.001049	3.277E-06
145	SX	0.004716	0.001945	0.00036	0.000137	0.000044	0.000212
145	SY	0.001492	0.004241	0.000124	0.000049	0.000015	0.000814
145	WB	-2.688E-06	-4.932E-07	-0.000063	0.000041	-0.000042	9.265E-08
146	DEAD	0.000017	0.000046	-0.000233	-0.000071	-0.000483	4.754E-06
146	LIVE	-0.000012	0.00002	-0.000301	-0.000144	-0.000736	4.128E-06
146	SX	0.004713	0.002087	0.000235	0.000109	0.00021	0.000215
146	SY	0.001491	0.003909	0.000085	0.000072	0.00007	0.000804
146	WB	-2.693E-06	-3.876E-07	-0.000013	-8.374E-06	-0.000031	1.013E-07
147	DEAD	0.000017	0.000049	-0.000067	-0.000035	0.000044	4.625E-06
147	LIVE	-0.000012	0.000022	-0.000022	-0.000013	-1.548E-06	3.862E-06
147	SX	0.004714	0.002192	0.000015	0.000021	0.000811	0.000212
147	SY	0.001491	0.003787	0.000029	0.000037	0.00027	0.0008
147	WB	-2.695E-06	-3.091E-07	-1.503E-07	1.325E-08	-3.645E-06	8.870E-08
148	DEAD	8.888E-06	0.000065	-0.000323	0.000014	-0.000247	5.084E-06
148	LIVE	-0.000019	0.000036	-0.000241	0.000014	-0.000195	4.453E-06
148	SX	0.004663	0.002791	0.000073	0.000016	0.000048	0.000218
148	SY	0.00211	0.004501	0.000033	8.755E-06	0.000018	0.000799
148	WB	-2.882E-06	3.877E-08	2.997E-07	2.951E-08	4.936E-07	9.932E-08
149	DEAD	-4.134E-06	0.000065	-0.000216	0.000087	-0.000185	4.446E-06
149	LIVE	-0.00003	0.000036	-0.000153	0.000038	-0.000146	3.806E-06
149	SX	0.004675	0.002793	0.000172	0.000201	0.000062	0.000218
149	SY	0.004033	0.004502	0.000181	0.000176	0.000093	0.000797
149	WB	-3.148E-06	3.699E-08	1.465E-07	-2.482E-07	1.621E-07	9.350E-08
150	DEAD	8.662E-06	0.000061	-0.000518	0.000014	-0.000103	4.325E-06
150	LIVE	-0.000019	0.000032	-0.00039	0.000017	-0.000071	3.715E-06
150	SX	0.004663	0.00263	0.000128	5.819E-06	0.000244	0.000217
150	SY	0.00211	0.004152	0.000048	8.900E-06	0.0001	0.000801
150	WB	-2.882E-06	-5.017E-08	8.902E-07	-6.027E-08	5.556E-07	9.448E-08
151	DEAD	-4.451E-06	0.000061	-0.000379	0.000058	-0.000112	4.844E-06
151	LIVE	-0.000031	0.000032	-0.000279	4.797E-06	-0.00008	4.247E-06
151	SX	0.004675	0.002631	0.000071	0.000175	0.000203	0.000219
151	SY	0.004037	0.004152	0.000142	0.000133	0.000119	0.000797
151	WB	-3.148E-06	-5.087E-08	4.258E-07	-2.775E-07	3.133E-07	9.872E-08
152	DEAD	8.408E-06	0.000057	-0.000505	-0.00001	0.000118	4.671E-06
152	LIVE	-0.000019	0.000029	-0.000366	-3.308E-06	0.00011	4.125E-06
152	SX	0.004663	0.002474	0.000355	0.000015	0.000141	0.000218
152	SY	0.00211	0.003905	0.000142	0.000017	0.000059	0.000796
152	WB	-2.881E-06	-1.394E-07	1.279E-06	-2.047E-07	8.767E-08	1.003E-07
153	DEAD	-4.766E-06	0.000057	-0.000414	0.000018	0.000044	4.584E-06
153	LIVE	-0.000031	0.000029	-0.000295	-0.000026	0.000048	3.917E-06

Table 28: Joint Displacements

Joint	OutputCase	U1	U2	U3	R1	R2	R3
		m	m	m	Radians	Radians	Radians
153	SX	0.004674	0.002474	0.000194	0.000101	0.000192	0.000217
153	SY	0.00404	0.003905	0.000085	0.000066	0.000144	0.000799
153	WB	-3.148E-06	-1.395E-07	6.950E-07	-2.179E-07	1.518E-07	9.300E-08
154	DEAD	8.169E-06	0.000053	-0.00031	-0.000032	0.000225	4.554E-06
154	LIVE	-0.00002	0.000025	-0.000196	-0.000022	0.000188	3.891E-06
154	SX	0.004663	0.002324	0.000372	0.000014	0.000216	0.000217
154	SY	0.00211	0.003781	0.000151	0.000023	0.000087	0.000806
154	WB	-2.881E-06	-2.303E-07	1.032E-06	-2.310E-07	-8.048E-07	9.655E-08
155	DEAD	-5.114E-06	0.000053	-0.000302	-7.267E-06	0.000158	4.386E-06
155	LIVE	-0.000031	0.000025	-0.000193	-0.000034	0.000137	3.862E-06
155	SX	0.004673	0.002323	0.000295	0.000036	0.000071	0.00022
155	SY	0.004042	0.00378	0.000149	0.000022	0.000027	0.000795
155	WB	-3.146E-06	-2.259E-07	6.849E-07	-1.065E-07	-3.065E-07	9.523E-08
156	DEAD	-0.000035	-0.000124	-0.000119	0.000111	0.000035	9.896E-06
156	LIVE	-0.000068	-0.000163	-0.000065	0.000089	0.000028	9.088E-06
156	SX	0.006876	0.003469	0.000032	0.000083	0.000255	0.000306
156	SY	0.005073	0.018894	0.000029	0.000404	0.000152	0.00107
156	WB	-4.812E-06	-6.680E-06	9.132E-09	4.859E-07	-1.344E-07	2.366E-07
157	DEAD	4.334E-06	-0.000123	-0.000127	-0.00009	0.000049	0.00001
157	LIVE	-0.000032	-0.000163	-0.000073	-0.000064	0.000043	9.556E-06
157	SX	0.006784	0.00347	0.00004	0.000084	0.000247	0.000306
157	SY	0.002132	0.018894	0.000044	0.000404	0.000077	0.001071
157	WB	-3.862E-06	-6.681E-06	-2.987E-07	4.297E-07	6.761E-07	2.523E-07
158	DEAD	-0.000036	-0.00009	-0.000115	0.00012	-0.000038	9.616E-06
158	LIVE	-0.000068	-0.000132	-0.000063	0.000105	-0.000032	8.775E-06
158	SX	0.006876	0.002769	0.000041	0.000075	0.000255	0.000306
158	SY	0.005074	0.015101	0.00005	0.000326	0.000153	0.001072
158	WB	-4.814E-06	-5.872E-06	-3.333E-08	1.016E-06	-1.269E-07	2.210E-07
159	DEAD	3.585E-06	-0.000089	-0.000182	0.000059	-0.000036	0.000011
159	LIVE	-0.000032	-0.000131	-0.000132	0.000057	-0.00003	9.674E-06
159	SX	0.006784	0.002769	0.000026	0.000075	0.000246	0.000307
159	SY	0.002132	0.015101	8.967E-06	0.000245	0.000077	0.001072
159	WB	-3.856E-06	-5.859E-06	-1.681E-06	1.354E-06	-3.972E-07	2.201E-07
160	DEAD	-0.000013	-0.000078	-0.000091	0.000071	0.000036	0.000012
160	LIVE	-0.000048	-0.000121	-0.000071	0.000081	0.000047	0.00001
160	SX	0.006777	0.002637	0.000027	0.000068	0.000217	0.000307
160	SY	0.00258	0.014092	0.000045	0.000296	0.000078	0.001072
160	WB	-4.193E-06	-5.592E-06	-2.888E-06	2.327E-06	2.082E-06	2.399E-07
161	DEAD	0.000017	-0.000131	-0.000143	0.000189	0.000084	0.000011
161	LIVE	-0.000021	-0.000174	-0.000086	0.000189	0.000071	0.000011
161	SX	0.006811	0.003468	0.000016	0.000097	0.000239	0.000307
161	SY	0.002615	0.018913	0.000036	0.00047	0.000085	0.001071
161	WB	-3.623E-06	-7.200E-06	-1.537E-08	4.694E-06	9.897E-07	3.123E-07
162	DEAD	0.000017	-0.000075	-0.000283	0.000252	-1.307E-06	0.00001
162	LIVE	-0.00002	-0.000119	-0.000236	0.000187	9.228E-06	9.561E-06
162	SX	0.00681	0.002621	0.000012	0.000045	0.000205	0.000307
162	SY	0.002615	0.013943	0.000054	0.000194	0.000067	0.001073
162	WB	-3.546E-06	-5.535E-06	-3.210E-06	-1.728E-06	3.298E-07	2.426E-07
163	DEAD	0.000074	-0.00013	-0.000171	-0.000104	0.000086	0.000011
163	LIVE	0.000034	-0.000172	-0.000129	-0.00005	0.000076	0.00001
163	SX	0.007134	0.003469	0.000024	0.000098	0.000254	0.000306
163	SY	0.007266	0.018913	0.000026	0.000469	0.000196	0.001071
163	WB	-2.037E-06	-7.152E-06	-1.678E-06	2.880E-06	4.909E-07	2.963E-07
164	DEAD	0.000072	-0.000071	-0.000266	-0.000342	-0.000032	0.000011

Table 28: Joint Displacements

Joint	OutputCase	U1	U2	U3	R1	R2	R3
		m	m	m	Radians	Radians	Radians
164	LIVE	0.000032	-0.000115	-0.000215	-0.000253	-0.000024	0.00001
164	SX	0.007133	0.002621	0.000012	0.000089	0.000224	0.000306
164	SY	0.007264	0.013944	0.000019	0.000351	0.000177	0.001073
164	WB	-2.130E-06	-5.498E-06	-2.286E-06	2.374E-06	3.111E-07	2.847E-07
165	DEAD	0.000071	-0.00003	-0.000205	-0.000281	-0.000012	0.000011
165	LIVE	0.00003	-0.000076	-0.000162	-0.000197	-8.680E-06	0.00001
165	SX	0.007132	0.002469	0.000017	0.000105	0.000212	0.000306
165	SY	0.007263	0.010441	0.000018	0.000312	0.000168	0.001073
165	WB	-2.253E-06	-4.494E-06	-1.923E-06	3.783E-06	9.880E-08	2.526E-07
166	DEAD	0.00007	2.044E-06	-0.000199	-0.000277	0.000012	0.00001
166	LIVE	0.000028	-0.000047	-0.000157	-0.000196	9.107E-06	9.343E-06
166	SX	0.007132	0.002716	8.730E-06	0.00012	0.000212	0.000306
166	SY	0.007263	0.008088	0.000023	0.000287	0.000167	0.001073
166	WB	-2.356E-06	-3.785E-06	-1.871E-06	3.756E-06	-6.740E-08	2.185E-07
167	DEAD	0.000069	0.000041	-0.000258	-0.000349	0.000044	0.000011
167	LIVE	0.000026	-0.000013	-0.00021	-0.000267	0.000034	9.198E-06
167	SX	0.007131	0.003338	0.000011	0.00014	0.000224	0.000306
167	SY	0.007263	0.006308	0.000018	0.000267	0.000177	0.001073
167	WB	-2.472E-06	-3.024E-06	-2.196E-06	2.236E-06	-2.693E-07	1.948E-07
168	DEAD	0.000067	0.00009	-0.000172	-0.000124	-0.000084	9.734E-06
168	LIVE	0.000024	0.000029	-0.000129	-0.000086	-0.000075	8.345E-06
168	SX	0.00713	0.004554	0.000017	0.000175	0.000254	0.000305
168	SY	0.007264	0.007423	0.000016	0.000292	0.000195	0.001072
168	WB	-2.538E-06	-2.180E-06	-1.535E-06	7.079E-07	-4.852E-07	1.844E-07
169	DEAD	0.000015	0.000092	-0.000228	0.000053	-0.000169	9.394E-06
169	LIVE	-0.000021	0.000029	-0.000158	0.000053	-0.00014	7.794E-06
169	SX	0.006814	0.004609	0.000022	0.000115	0.000241	0.000306
169	SY	0.002602	0.007553	0.00001	0.00019	0.000081	0.001073
169	WB	-3.461E-06	-2.210E-06	1.447E-07	1.517E-06	1.263E-07	1.530E-07
170	DEAD	-0.000019	0.000091	-0.00015	0.000037	-0.000091	0.00001
170	LIVE	-0.000049	0.000028	-0.000091	0.000041	-0.00007	7.974E-06
170	SX	0.006801	0.004608	0.000035	0.000102	0.000274	0.000306
170	SY	0.002983	0.007552	0.000022	0.000167	0.00011	0.001072
170	WB	-4.001E-06	-2.274E-06	1.010E-08	8.337E-07	2.555E-08	1.234E-07
171	DEAD	-0.000046	0.000091	-0.000097	0.000023	-0.000059	9.680E-06
171	LIVE	-0.000071	0.000028	-0.000047	0.000027	-0.000045	7.528E-06
171	SX	0.006909	0.004602	0.000038	0.000156	0.000294	0.000306
171	SY	0.005526	0.007539	0.000035	0.000257	0.000178	0.00107
171	WB	-4.353E-06	-2.314E-06	2.306E-07	1.542E-06	-1.454E-07	1.026E-07
172	DEAD	-0.000046	0.000045	-0.00015	0.000023	0.000032	9.808E-06
172	LIVE	-0.000071	-8.521E-06	-0.000057	0.000015	0.000031	8.081E-06
172	SX	0.006912	0.003504	0.00006	0.000139	0.000269	0.000305
172	SY	0.005554	0.006168	0.000077	0.000249	0.000198	0.001073
172	WB	-4.369E-06	-2.865E-06	-1.298E-08	3.076E-07	1.227E-07	1.555E-07
173	DEAD	-0.000018	0.000047	-0.000169	3.030E-06	0.000087	0.000011
173	LIVE	-0.000048	-6.967E-06	-0.000073	0.000013	0.000075	7.949E-06
173	SX	0.006802	0.003552	3.083E-06	0.000144	0.000221	0.000309
173	SY	0.002982	0.006154	5.871E-06	0.000249	0.00009	0.001066
173	WB	-4.019E-06	-2.835E-06	-9.141E-08	2.992E-07	1.459E-07	7.828E-08
174	DEAD	-0.000013	0.000042	-0.00011	0.00019	-0.000029	0.000011
174	LIVE	-0.000046	-0.000012	-0.000091	0.000223	-0.000032	9.565E-06
174	SX	0.00678	0.003461	0.000031	0.000124	0.00022	0.000306
174	SY	0.002581	0.0062	0.000031	0.000227	0.000081	0.001075
174	WB	-4.082E-06	-2.982E-06	-3.241E-06	6.379E-06	-1.345E-06	2.212E-07

Table 28: Joint Displacements

Joint	OutputCase	U1	U2	U3	R1	R2	R3
		m	m	m	Radians	Radians	Radians
175	DEAD	-0.000013	-3.384E-06	-0.00012	0.000022	-6.740E-06	0.000011
175	LIVE	-0.000047	-0.000052	-0.000102	0.000029	-0.000013	9.612E-06
175	SX	0.006777	0.002697	0.000025	0.000265	0.000175	0.000305
175	SY	0.00258	0.008229	8.990E-06	0.000612	0.000063	0.001078
175	WB	-4.129E-06	-3.898E-06	-3.707E-06	1.188E-06	-4.952E-07	2.231E-07
176	DEAD	-0.000014	-0.000031	-0.000125	0.000025	-0.000015	0.000011
176	LIVE	-0.000047	-0.000077	-0.000107	0.00003	-0.000018	0.00001
176	SX	0.006776	0.002481	0.000023	0.000235	0.000173	0.000306
176	SY	0.002579	0.010249	7.841E-06	0.000613	0.000062	0.00108
176	WB	-4.181E-06	-4.496E-06	-3.943E-06	1.081E-06	-8.306E-07	2.587E-07
177	DEAD	0.000016	-0.000034	-0.000231	0.000379	-0.000015	0.000011
177	LIVE	-0.00002	-0.00008	-0.000197	0.000309	-0.000013	9.801E-06
177	SX	0.00681	0.002469	0.00001	0.000097	0.000197	0.000307
177	SY	0.002615	0.010442	0.000022	0.000288	0.000068	0.001073
177	WB	-3.525E-06	-4.502E-06	-3.323E-06	-2.931E-07	-7.960E-08	2.456E-07
178	DEAD	0.000016	-1.796E-06	-0.000216	0.00037	-0.000026	0.000011
178	LIVE	-0.00002	-0.00005	-0.000181	0.000301	-0.000043	9.924E-06
178	SX	0.006811	0.002717	0.000013	0.000114	0.000197	0.000306
178	SY	0.002615	0.008088	0.000017	0.000264	0.000068	0.001075
178	WB	-3.512E-06	-3.790E-06	-2.953E-06	-5.421E-07	-2.162E-06	2.368E-07
179	DEAD	0.000017	0.000037	-0.000348	0.000147	0.00012	0.000011
179	LIVE	-0.000019	-0.000016	-0.000298	0.000062	0.000102	9.323E-06
179	SX	0.006812	0.003338	0.000014	0.000078	0.000204	0.000306
179	SY	0.002616	0.006308	0.000019	0.000141	0.000071	0.001072
179	WB	-3.466E-06	-3.061E-06	-3.372E-06	-6.074E-06	1.634E-07	1.978E-07
180	DEAD	0.000017	-0.000089	-0.000495	0.000294	-0.00021	9.992E-06
180	LIVE	-0.00002	-0.000131	-0.000414	0.000265	-0.000175	9.734E-06
180	SX	0.006811	0.002769	0.000082	0.00009	0.000022	0.000307
180	SY	0.002615	0.015102	0.000127	0.000076	0.000035	0.001075
180	WB	-3.559E-06	-5.859E-06	-5.535E-06	3.448E-06	-1.727E-06	2.969E-07
181	DEAD	0.000014	-0.000069	-0.00065	0.000267	0.000269	0.000012
181	LIVE	-0.000022	-0.000112	-0.000817	0.000391	0.000319	0.000011
181	SX	0.006802	0.00256	0.000029	0.00002	5.914E-06	0.000307
181	SY	0.002441	0.013345	0.000039	0.00002	0.000012	0.001072
181	WB	-3.585E-06	-5.376E-06	-0.000028	0.000014	0.00001	2.826E-07
182	DEAD	4.232E-06	-0.000069	-0.000425	0.000204	0.000269	0.000011
182	LIVE	-0.000031	-0.000112	-0.00049	0.000287	0.000319	0.00001
182	SX	0.006784	0.00256	0.000012	0.00002	5.914E-06	0.000307
182	SY	0.00214	0.013345	0.000022	0.00002	0.000012	0.001072
182	WB	-3.811E-06	-5.378E-06	-0.000017	9.552E-06	0.00001	2.529E-07
183	DEAD	-0.000014	-0.000069	-0.000175	0.000157	0.000102	0.000011
183	LIVE	-0.000048	-0.000112	-0.000177	0.00018	0.000129	0.000011
183	SX	0.006777	0.00256	0.000057	0.000065	0.000046	0.000307
183	SY	0.00258	0.013345	0.000051	0.00007	0.000017	0.001072
183	WB	-4.198E-06	-5.384E-06	-7.257E-06	5.622E-06	5.239E-06	2.584E-07
184	DEAD	0.000044	-0.00013	-0.000696	-8.707E-06	0.001238	0.000012
184	LIVE	5.903E-06	-0.000172	-0.000541	-0.000016	0.001076	0.000012
184	SX	0.006932	0.003469	0.000013	0.000036	1.809E-06	0.000307
184	SY	0.004735	0.018913	5.874E-06	0.000174	0.00001	0.001077
184	WB	-2.827E-06	-7.119E-06	-2.100E-06	-1.088E-06	2.461E-07	3.513E-07
185	DEAD	0.000044	-0.00012	-0.001802	3.356E-06	0.000977	0.000011
185	LIVE	5.974E-06	-0.000162	-0.001503	6.727E-07	0.000847	9.634E-06
185	SX	0.006932	0.003272	0.000012	0.000011	5.705E-06	0.000307
185	SY	0.004735	0.017966	0.000011	0.000059	8.737E-06	0.001071

Table 28: Joint Displacements

Joint	OutputCase	U1	U2	U3	R1	R2	R3
		m	m	m	Radians	Radians	Radians
185	WB	-2.829E-06	-6.825E-06	-2.305E-06	-7.492E-07	1.202E-07	2.372E-07
186	DEAD	0.000044	-0.000109	-0.002445	0.000012	0.000415	0.000012
186	LIVE	5.805E-06	-0.000152	-0.002057	0.00001	0.000355	0.000013
186	SX	0.006932	0.003097	4.163E-06	4.625E-06	0.000011	0.000307
186	SY	0.004735	0.017061	0.000014	6.219E-06	8.358E-06	0.001077
186	WB	-2.837E-06	-6.519E-06	-2.300E-06	-6.360E-07	-1.455E-07	4.070E-07
187	DEAD	0.000044	-0.000099	-0.002546	0.000015	-0.000164	0.00001
187	LIVE	5.564E-06	-0.000142	-0.002139	0.000013	-0.000148	9.612E-06
187	SX	0.006932	0.002937	8.266E-06	5.257E-06	0.00001	0.000307
187	SY	0.004735	0.016163	0.000015	0.000012	0.000016	0.001073
187	WB	-2.845E-06	-6.214E-06	-2.040E-06	-6.766E-07	-4.260E-07	2.524E-07
188	DEAD	0.000044	-0.000089	-0.002185	0.000017	-0.000552	0.000012
188	LIVE	5.337E-06	-0.000132	-0.001821	0.000014	-0.000485	0.000012
188	SX	0.006932	0.002795	0.000015	8.492E-06	5.505E-06	0.000307
188	SY	0.004734	0.015274	0.000024	0.000047	0.000023	0.001075
188	WB	-2.853E-06	-5.937E-06	-1.562E-06	-5.520E-07	-5.482E-07	3.390E-07
189	DEAD	0.000044	-0.000079	-0.001627	0.000017	-0.000524	9.729E-06
189	LIVE	5.248E-06	-0.000122	-0.001331	0.000012	-0.000458	9.174E-06
189	SX	0.006932	0.002674	0.000015	0.00002	0.000011	0.000307
189	SY	0.004734	0.014394	0.00004	0.000094	0.00002	0.001073
189	WB	-2.860E-06	-5.660E-06	-1.104E-06	-4.365E-07	-3.904E-07	2.589E-07
190	DEAD	0.000044	-0.000074	-0.001413	0.000011	-0.000283	0.000011
190	LIVE	5.314E-06	-0.000117	-0.001145	5.185E-06	-0.000242	0.000011
190	SX	0.006932	0.002621	0.000013	0.000021	0.000014	0.000307
190	SY	0.004734	0.013945	0.000047	0.000095	0.000015	0.001074
190	WB	-2.862E-06	-5.530E-06	-9.583E-07	-4.725E-07	-2.578E-07	2.926E-07
191	DEAD	0.000044	-0.000069	-0.001363	4.280E-06	-0.000042	0.000011
191	LIVE	5.388E-06	-0.000112	-0.001105	-3.335E-06	-0.000027	0.000011
191	SX	0.006932	0.002577	0.000013	0.00002	0.00001	0.000307
191	SY	0.004734	0.013527	0.00005	0.000087	8.225E-06	0.001075
191	WB	-2.863E-06	-5.400E-06	-8.701E-07	-6.345E-07	-1.575E-07	2.968E-07
192	DEAD	0.000044	-0.000059	-0.001449	-0.000013	0.000098	0.000011
192	LIVE	5.254E-06	-0.000103	-0.00119	-0.000022	0.000094	9.866E-06
192	SX	0.006931	0.002508	0.000013	8.134E-06	3.043E-06	0.000307
192	SY	0.004734	0.012675	0.000046	0.000035	0.000013	0.001072
192	WB	-2.868E-06	-5.152E-06	-8.023E-07	-9.785E-07	-3.564E-08	2.545E-07
193	DEAD	0.000044	-0.000049	-0.001488	-0.000021	-0.000051	0.000011
193	LIVE	4.934E-06	-0.000094	-0.001229	-0.00003	-0.00004	0.00001
193	SX	0.006931	0.002467	8.976E-06	7.583E-06	4.428E-06	0.000307
193	SY	0.004734	0.01184	0.000038	0.000026	0.000015	0.001075
193	WB	-2.877E-06	-4.910E-06	-7.873E-07	-1.159E-06	-1.639E-08	2.825E-07
194	DEAD	0.000043	-0.000039	-0.001362	-0.000025	-0.00017	0.000011
194	LIVE	4.678E-06	-0.000085	-0.001122	-0.000033	-0.000146	9.748E-06
194	SX	0.006931	0.002457	6.763E-06	0.000023	5.015E-06	0.000307
194	SY	0.004734	0.011027	0.000036	0.000068	0.00001	0.001072
194	WB	-2.887E-06	-4.672E-06	-7.547E-07	-1.194E-06	-9.892E-08	2.405E-07
195	DEAD	0.000043	-0.000032	-0.00125	-0.000025	-0.00007	0.000011
195	LIVE	4.651E-06	-0.000078	-0.001026	-0.000032	-0.000057	0.00001
195	SX	0.006931	0.00247	9.675E-06	0.000031	4.609E-06	0.000307
195	SY	0.004734	0.010443	0.000037	0.000092	6.881E-06	0.001074
195	WB	-2.894E-06	-4.506E-06	-6.464E-07	-1.179E-06	-2.996E-07	2.498E-07
196	DEAD	0.000044	-0.000021	-0.001298	-0.000021	0.000041	0.000011
196	LIVE	4.561E-06	-0.000068	-0.001076	-0.000029	0.000042	0.00001
196	SX	0.006931	0.002521	7.063E-06	0.000024	9.133E-06	0.000306

Table 28: Joint Displacements

Joint	OutputCase	U1	U2	U3	R1	R2	R3
		m	m	m	Radians	Radians	Radians
196	SY	0.004734	0.009567	0.000038	0.000068	5.374E-06	0.001074
196	WB	-2.905E-06	-4.244E-06	-1.932E-07	-1.138E-06	-3.757E-07	2.599E-07
197	DEAD	0.000043	-0.000011	-0.001291	-0.000021	-0.000058	0.000011
197	LIVE	4.298E-06	-0.000059	-0.00107	-0.000028	-0.000055	9.553E-06
197	SX	0.006931	0.002597	5.589E-06	0.000027	9.417E-06	0.000307
197	SY	0.004734	0.00885	0.000036	0.000064	5.331E-06	0.001073
197	WB	-2.915E-06	-4.028E-06	2.662E-08	-1.116E-06	-1.040E-07	2.212E-07
198	DEAD	0.000043	1.470E-07	-0.001221	-0.000021	0.000041	0.000011
198	LIVE	4.239E-06	-0.000049	-0.001002	-0.000026	0.000032	9.872E-06
198	SX	0.006931	0.002717	9.308E-06	0.000038	3.697E-06	0.000306
198	SY	0.004734	0.008089	0.000035	0.000086	8.147E-06	0.001074
198	WB	-2.924E-06	-3.792E-06	5.814E-08	-9.532E-07	-1.683E-07	2.325E-07
199	DEAD	0.000043	0.00001	-0.001354	-8.214E-06	0.000125	0.000011
199	LIVE	4.114E-06	-0.00004	-0.001117	-0.00001	0.000107	9.446E-06
199	SX	0.006931	0.002851	0.00001	0.000024	6.748E-06	0.000306
199	SY	0.004734	0.007476	0.000034	0.000052	0.000014	0.001074
199	WB	-2.936E-06	-3.582E-06	3.930E-07	-4.184E-07	-5.043E-07	2.197E-07
200	DEAD	0.000043	0.00002	-0.001413	4.871E-06	-7.889E-06	0.000011
200	LIVE	3.748E-06	-0.000031	-0.001163	4.205E-06	-0.000015	9.621E-06
200	SX	0.006931	0.003	0.00002	0.000014	0.000012	0.000306
200	SY	0.004734	0.006973	0.000039	0.000025	0.000017	0.001074
200	WB	-2.948E-06	-3.393E-06	9.426E-07	-6.112E-09	-6.581E-07	2.113E-07
201	DEAD	0.000043	0.00003	-0.00136	0.000016	-0.000027	0.00001
201	LIVE	3.413E-06	-0.000023	-0.001109	0.000016	-0.000032	8.858E-06
201	SX	0.006931	0.003165	0.000029	0.000027	5.101E-06	0.000306
201	SY	0.004735	0.006575	0.000049	0.000048	0.000011	0.001073
201	WB	-2.957E-06	-3.214E-06	1.505E-06	2.669E-07	-4.051E-07	1.910E-07
202	DEAD	0.000043	0.000038	-0.001423	0.000011	0.000318	9.926E-06
202	LIVE	3.367E-06	-0.000015	-0.001159	0.000013	0.000281	8.577E-06
202	SX	0.006931	0.003339	0.000027	0.000041	0.000013	0.000306
202	SY	0.004735	0.006309	0.000051	0.000072	8.166E-06	0.001075
202	WB	-2.962E-06	-3.057E-06	1.574E-06	3.786E-07	4.277E-07	1.835E-07
203	DEAD	0.000043	0.000048	-0.001949	-0.000017	0.000619	0.000011
203	LIVE	3.424E-06	-7.076E-06	-0.00163	-0.000015	0.000555	9.409E-06
203	SX	0.006931	0.003538	0.000018	0.000027	0.000016	0.000306
203	SY	0.004735	0.006167	0.000038	0.000047	0.000018	0.001073
203	WB	-2.967E-06	-2.890E-06	6.915E-07	1.796E-07	1.203E-06	1.979E-07
204	DEAD	0.000043	0.000057	-0.002465	-0.000041	0.000416	9.561E-06
204	LIVE	3.219E-06	4.267E-07	-0.002092	-0.000038	0.000372	8.035E-06
204	SX	0.006931	0.003741	0.000017	6.302E-06	0.000012	0.000306
204	SY	0.004735	0.006184	0.000022	0.000012	0.000016	0.001074
204	WB	-2.974E-06	-2.743E-06	-4.671E-07	1.646E-08	1.140E-06	1.591E-07
205	DEAD	0.000042	0.000066	-0.002649	-0.00005	-0.000058	0.00001
205	LIVE	2.969E-06	7.836E-06	-0.002258	-0.000045	-0.000048	8.856E-06
205	SX	0.006931	0.003953	0.000022	4.807E-06	3.527E-06	0.000306
205	SY	0.004734	0.00635	0.000015	6.875E-06	7.209E-06	0.001073
205	WB	-2.982E-06	-2.598E-06	-1.274E-06	1.496E-07	5.898E-07	1.865E-07
206	DEAD	0.000042	0.000075	-0.002343	-0.000039	-0.000625	0.00001
206	LIVE	2.783E-06	0.000015	-0.001991	-0.000034	-0.000549	8.712E-06
206	SX	0.006931	0.004172	0.000022	0.000011	0.000013	0.000306
206	SY	0.004734	0.006653	0.00002	4.555E-06	0.000015	0.001073
206	WB	-2.987E-06	-2.451E-06	-1.532E-06	3.183E-07	5.604E-08	1.688E-07
207	DEAD	0.000042	0.000084	-0.001539	-0.000032	-0.001108	9.762E-06
207	LIVE	2.735E-06	0.000023	-0.001283	-0.000027	-0.000977	8.355E-06

Table 28: Joint Displacements

Joint	OutputCase	U1	U2	U3	R1	R2	R3
		m	m	m	Radians	Radians	Radians
207	SX	0.006931	0.004397	0.000022	0.000029	0.000023	0.000306
207	SY	0.004735	0.007076	0.000037	0.000042	0.000023	0.001073
207	WB	-2.990E-06	-2.304E-06	-1.424E-06	2.408E-07	-2.068E-07	1.766E-07
208	DEAD	0.000042	0.000091	-0.00064	-0.000053	-0.001266	0.000011
208	LIVE	2.909E-06	0.000029	-0.000489	-0.000047	-0.001117	9.606E-06
208	SX	0.006931	0.004582	0.000033	0.00006	0.000024	0.000307
208	SY	0.004735	0.007488	0.000053	0.000098	0.000024	0.001074
208	WB	-2.988E-06	-2.177E-06	-1.246E-06	1.507E-08	-2.522E-07	1.925E-07
209	DEAD	0.000073	-0.00012	-0.000427	-0.000771	0.000287	0.000012
209	LIVE	0.000034	-0.000162	-0.000346	-0.000624	0.000243	0.000012
209	SX	0.007134	0.003272	0.000096	0.000068	0.000043	0.000307
209	SY	0.007266	0.017966	0.000098	0.000117	0.000027	0.001076
209	WB	-2.046E-06	-6.822E-06	-1.906E-06	3.901E-07	1.302E-07	3.881E-07
210	DEAD	0.000073	-0.00011	-0.000681	-0.001001	0.000182	0.000011
210	LIVE	0.000033	-0.000152	-0.000561	-0.000824	0.000154	9.749E-06
210	SX	0.007134	0.003097	0.000067	0.000046	0.000068	0.000307
210	SY	0.007265	0.017061	0.000068	0.000038	0.000059	0.001072
210	WB	-2.057E-06	-6.526E-06	-1.936E-06	9.224E-08	7.717E-09	2.501E-07
211	DEAD	0.000073	-0.000099	-0.00075	-0.001021	-0.000047	0.000012
211	LIVE	0.000033	-0.000142	-0.000619	-0.00084	-0.000039	0.000012
211	SX	0.007134	0.002937	0.000023	0.000017	0.000093	0.000307
211	SY	0.007265	0.016164	9.830E-06	0.000014	0.000076	0.001076
211	WB	-2.074E-06	-6.237E-06	-1.925E-06	1.907E-07	1.847E-08	3.679E-07
212	DEAD	0.000072	-0.000089	-0.000599	-0.000899	-0.000227	0.00001
212	LIVE	0.000033	-0.000132	-0.000492	-0.00073	-0.00019	9.756E-06
212	SX	0.007134	0.002795	0.000098	0.000075	0.000035	0.000307
212	SY	0.007265	0.015274	0.000067	0.000049	0.000026	0.001073
212	WB	-2.094E-06	-5.944E-06	-1.973E-06	5.152E-07	1.200E-07	2.696E-07
213	DEAD	0.000072	-0.000078	-0.00035	-0.000714	-0.000188	0.000014
213	LIVE	0.000032	-0.000121	-0.000285	-0.000567	-0.000155	0.000014
213	SX	0.007134	0.002674	0.000082	0.000078	0.000111	0.000307
213	SY	0.007264	0.014394	0.000052	0.000102	0.000092	0.001075
213	WB	-2.117E-06	-5.658E-06	-2.143E-06	1.044E-06	2.579E-07	3.598E-07
214	DEAD	0.000072	-0.000068	-0.000288	-0.000581	0.000041	8.344E-06
214	LIVE	0.000032	-0.000111	-0.000233	-0.00045	0.000034	7.847E-06
214	SX	0.007133	0.002578	0.000049	0.000038	0.000101	0.000307
214	SY	0.007264	0.013527	0.000055	0.000149	0.000076	0.001072
214	WB	-2.145E-06	-5.394E-06	-2.324E-06	1.398E-06	4.090E-08	2.349E-07
215	DEAD	0.000071	-0.000059	-0.000359	-0.000583	0.000042	0.000011
215	LIVE	0.000031	-0.000103	-0.000292	-0.000452	0.000033	0.000011
215	SX	0.007134	0.002508	0.000044	0.000033	0.000052	0.000307
215	SY	0.007264	0.012675	0.000045	0.000085	0.000046	0.001075
215	WB	-2.175E-06	-5.158E-06	-2.174E-06	1.274E-06	-2.098E-07	2.926E-07
216	DEAD	0.000071	-0.000049	-0.000359	-0.000601	-0.00005	0.00001
216	LIVE	0.000031	-0.000094	-0.000291	-0.00047	-0.000043	9.596E-06
216	SX	0.007133	0.002467	0.000039	0.000032	0.000073	0.000307
216	SY	0.007264	0.01184	0.000025	0.000045	0.000057	0.001072
216	WB	-2.204E-06	-4.918E-06	-1.957E-06	1.250E-06	-1.743E-07	2.456E-07
217	DEAD	0.000071	-0.000039	-0.000271	-0.000571	-0.000092	0.000013
217	LIVE	0.00003	-0.000084	-0.000216	-0.000448	-0.000077	0.000012
217	SX	0.007133	0.002457	0.000082	0.000074	0.00004	0.000307
217	SY	0.007263	0.011027	0.000056	0.000083	0.000035	0.001075
217	WB	-2.232E-06	-4.679E-06	-1.866E-06	1.589E-06	-4.286E-10	2.871E-07
218	DEAD	0.000071	-0.00002	-0.000248	-0.000537	0.000022	9.329E-06

Table 28: Joint Displacements

Joint	OutputCase	U1	U2	U3	R1	R2	R3
		m	m	m	Radians	Radians	Radians
218	LIVE	0.000029	-0.000068	-0.000198	-0.00042	0.000019	8.447E-06
218	SX	0.007132	0.002521	0.000029	0.000028	0.000027	0.000307
218	SY	0.007263	0.009567	0.000034	0.0001	0.000025	0.001073
218	WB	-2.288E-06	-4.254E-06	-1.879E-06	1.806E-06	-4.576E-08	2.226E-07
219	DEAD	0.000071	-0.000011	-0.000245	-0.000536	-0.000028	0.000012
219	LIVE	0.000029	-0.000059	-0.000196	-0.000419	-0.000023	0.000011
219	SX	0.007132	0.002597	0.000036	0.000054	0.000029	0.000306
219	SY	0.007263	0.008849	0.000025	0.00008	0.000023	0.001074
219	WB	-2.320E-06	-4.038E-06	-1.852E-06	1.857E-06	-4.442E-10	2.576E-07
220	DEAD	0.00007	0.000011	-0.000284	-0.000562	0.000078	9.618E-06
220	LIVE	0.000028	-0.000039	-0.000229	-0.000441	0.000067	8.510E-06
220	SX	0.007132	0.00285	0.000069	0.000042	9.507E-06	0.000306
220	SY	0.007263	0.007476	0.000061	0.000093	0.000012	0.001074
220	WB	-2.387E-06	-3.594E-06	-1.859E-06	1.836E-06	7.777E-08	2.070E-07
221	DEAD	0.00007	0.00002	-0.000336	-0.000581	9.426E-06	0.00001
221	LIVE	0.000027	-0.000031	-0.000274	-0.000454	0.00001	9.064E-06
221	SX	0.007132	0.003	3.301E-06	0.000026	0.000075	0.000306
221	SY	0.007264	0.006973	9.112E-06	0.000052	0.000061	0.001073
221	WB	-2.416E-06	-3.407E-06	-2.007E-06	1.794E-06	1.908E-07	2.032E-07
222	DEAD	0.000069	0.00003	-0.000302	-0.000569	-0.000046	0.000012
222	LIVE	0.000027	-0.000022	-0.000247	-0.000444	-0.000038	0.000011
222	SX	0.007131	0.003165	0.00006	0.000081	5.509E-06	0.000306
222	SY	0.007263	0.006575	0.000046	0.000094	5.585E-06	0.001074
222	WB	-2.445E-06	-3.218E-06	-2.195E-06	2.033E-06	1.074E-07	2.277E-07
223	DEAD	0.000069	0.000048	-0.000489	-0.000803	0.00027	7.829E-06
223	LIVE	0.000026	-6.664E-06	-0.000403	-0.000655	0.000226	6.440E-06
223	SX	0.007131	0.003538	0.000108	0.000069	0.000028	0.000307
223	SY	0.007263	0.006167	0.000088	0.000092	0.000022	0.001074
223	WB	-2.493E-06	-2.892E-06	-1.991E-06	1.472E-06	-1.528E-07	1.380E-07
224	DEAD	0.000068	0.000057	-0.000737	-0.00096	0.000176	0.000011
224	LIVE	0.000025	3.454E-07	-0.000611	-0.000798	0.000147	9.250E-06
224	SX	0.007131	0.003741	0.00007	0.000051	0.000075	0.000306
224	SY	0.007263	0.006184	0.000057	0.000046	0.000059	0.001073
224	WB	-2.509E-06	-2.749E-06	-1.911E-06	8.447E-07	-4.521E-08	1.933E-07
225	DEAD	0.000068	0.000066	-0.000801	-0.001031	-0.000059	9.725E-06
225	LIVE	0.000025	7.921E-06	-0.000664	-0.000864	-0.000051	8.167E-06
225	SX	0.007131	0.003953	0.000024	6.184E-06	0.000095	0.000306
225	SY	0.007263	0.00635	0.000019	9.871E-06	0.000076	0.001074
225	WB	-2.521E-06	-2.599E-06	-1.907E-06	3.471E-07	-9.039E-09	1.603E-07
226	DEAD	0.000068	0.000075	-0.000631	-0.000956	-0.000267	0.00001
226	LIVE	0.000025	0.000015	-0.000519	-0.000797	-0.000226	8.670E-06
226	SX	0.007131	0.004172	0.000099	0.000061	0.000037	0.000306
226	SY	0.007263	0.006653	0.000078	0.000057	0.000031	0.001073
226	WB	-2.529E-06	-2.450E-06	-1.891E-06	1.205E-07	-8.251E-08	1.831E-07
227	DEAD	0.000067	0.000084	-0.000329	-0.000659	-0.000274	0.000011
227	LIVE	0.000024	0.000023	-0.000263	-0.000536	-0.000234	9.045E-06
227	SX	0.007131	0.004397	0.000086	0.000087	0.000105	0.000306
227	SY	0.007263	0.007076	0.00007	0.000107	0.000079	0.001074
227	WB	-2.534E-06	-2.292E-06	-1.754E-06	1.843E-07	-2.774E-07	1.783E-07
228	DEAD	0.000016	-0.00012	-0.000405	0.000784	0.000289	0.000013
228	LIVE	-0.000021	-0.000162	-0.000314	0.000651	0.000254	0.000014
228	SX	0.006811	0.003272	0.000099	0.000079	0.000046	0.000306
228	SY	0.002615	0.017966	0.000036	0.000063	0.000063	0.001078
228	WB	-3.611E-06	-6.811E-06	-2.839E-06	3.804E-07	3.304E-06	4.813E-07

Table 28: Joint Displacements

Joint	OutputCase	U1	U2	U3	R1	R2	R3
		m	m	m	Radians	Radians	Radians
229	DEAD	0.000016	-0.000109	-0.000654	0.000999	0.000163	0.00001
229	LIVE	-0.000021	-0.000151	-0.000534	0.000824	0.000148	8.640E-06
229	SX	0.006811	0.003097	0.000079	0.000048	0.000058	0.000307
229	SY	0.002615	0.01706	0.000079	0.000038	0.000059	0.001071
229	WB	-3.596E-06	-6.484E-06	-5.746E-06	-1.814E-06	1.958E-06	1.743E-07
230	DEAD	0.000016	-0.000099	-0.000698	0.001039	-0.000066	0.000012
230	LIVE	-0.000021	-0.000142	-0.000579	0.000851	-0.000048	0.000012
230	SX	0.006811	0.002937	0.000022	0.000015	0.000085	0.000307
230	SY	0.002615	0.016163	0.000119	0.000068	0.00004	0.001076
230	WB	-3.584E-06	-6.220E-06	-6.536E-06	-2.494E-06	2.839E-08	3.693E-07
231	DEAD	0.000017	-0.00009	-0.000539	0.000911	-0.000206	9.332E-06
231	LIVE	-0.000021	-0.000132	-0.000451	0.000734	-0.000171	8.933E-06
231	SX	0.006811	0.002795	0.000076	0.000052	0.000039	0.000307
231	SY	0.002615	0.015272	0.000131	0.000056	0.000024	0.001075
231	WB	-3.566E-06	-5.926E-06	-5.814E-06	-2.388E-06	-1.476E-06	2.681E-07
232	DEAD	0.000017	-0.00008	-0.00034	0.000691	-0.000135	0.000011
232	LIVE	-0.00002	-0.000123	-0.000283	0.000548	-0.000111	0.000011
232	SX	0.006811	0.002674	0.00007	0.000043	0.000095	0.000307
232	SY	0.002615	0.014393	0.000078	0.000025	0.000051	0.001075
232	WB	-3.553E-06	-5.668E-06	-3.780E-06	-1.459E-06	-1.367E-06	2.992E-07
233	DEAD	0.000017	-0.00007	-0.000337	0.000537	0.000114	0.000012
233	LIVE	-0.00002	-0.000114	-0.000298	0.000409	0.000135	0.000011
233	SX	0.006811	0.002577	0.000048	0.000048	0.00009	0.000307
233	SY	0.002615	0.013527	0.000057	0.000026	0.00003	0.001071
233	WB	-3.544E-06	-5.414E-06	-4.577E-06	-1.928E-06	3.335E-06	2.766E-07
234	DEAD	0.000017	-0.00006	-0.000498	0.000495	0.000109	0.000011
234	LIVE	-0.00002	-0.000104	-0.000484	0.000339	0.00013	0.00001
234	SX	0.006811	0.002508	0.000039	0.000035	0.000049	0.000307
234	SY	0.002615	0.012675	0.000039	0.00002	0.000032	0.001075
234	WB	-3.537E-06	-5.163E-06	-9.355E-06	-5.107E-06	3.604E-06	2.749E-07
235	DEAD	0.000017	-0.00005	-0.00052	0.000513	-0.000078	0.000011
235	LIVE	-0.00002	-0.000094	-0.000515	0.000349	-0.000081	9.976E-06
235	SX	0.006811	0.002467	0.000035	0.000017	0.000062	0.000307
235	SY	0.002615	0.011841	0.000012	0.000015	0.000037	0.001072
235	WB	-3.531E-06	-4.919E-06	-0.000011	-5.830E-06	-1.513E-06	2.417E-07
236	DEAD	0.000016	-0.00004	-0.000353	0.000557	-0.000178	9.562E-06
236	LIVE	-0.00002	-0.000086	-0.000331	0.000422	-0.000197	9.282E-06
236	SX	0.00681	0.002457	0.000071	0.000041	0.000039	0.000307
236	SY	0.002615	0.011027	0.000029	0.000073	0.000018	0.001076
236	WB	-3.527E-06	-4.679E-06	-6.308E-06	-2.784E-06	-4.551E-06	2.883E-07
237	DEAD	0.000016	-0.000022	-0.000364	0.000478	0.000083	0.000012
237	LIVE	-0.00002	-0.000069	-0.000362	0.000338	0.000107	0.000011
237	SX	0.006811	0.002522	0.000029	0.000044	0.000028	0.000307
237	SY	0.002615	0.009569	0.000015	0.000072	9.055E-06	0.001073
237	WB	-3.518E-06	-4.259E-06	-8.439E-06	-4.987E-06	3.519E-06	2.236E-07
238	DEAD	0.000016	-0.000012	-0.000373	0.000472	-0.00007	9.619E-06
238	LIVE	-0.00002	-0.00006	-0.000378	0.000325	-0.000081	8.904E-06
238	SX	0.006811	0.002598	0.000031	0.00003	0.000025	0.000306
238	SY	0.002615	0.008851	0.000019	0.000072	8.590E-06	0.001074
238	WB	-3.514E-06	-4.042E-06	-9.267E-06	-5.765E-06	-2.243E-06	2.447E-07
239	DEAD	0.000016	9.787E-06	-0.000281	0.000585	0.00007	0.000012
239	LIVE	-0.00002	-0.00004	-0.000225	0.000469	0.000055	0.000011
239	SX	0.006811	0.002851	0.000063	0.000056	0.000017	0.000307
239	SY	0.002615	0.007476	0.000021	0.000049	0.000013	0.001074

Table 28: Joint Displacements

Joint	OutputCase	U1	U2	U3	R1	R2	R3
		m	m	m	Radians	Radians	Radians
239	WB	-3.496E-06	-3.585E-06	-1.865E-06	-1.014E-06	-4.656E-07	2.144E-07
240	DEAD	0.000016	0.00002	-0.000337	0.000574	0.00003	0.00001
240	LIVE	-0.00002	-0.000031	-0.000275	0.000449	0.000031	9.143E-06
240	SX	0.006812	0.003	8.204E-06	5.466E-06	0.000078	0.000306
240	SY	0.002616	0.006973	6.805E-06	0.000013	0.000028	0.001074
240	WB	-3.483E-06	-3.397E-06	-2.019E-06	-1.803E-06	5.124E-07	2.067E-07
241	DEAD	0.000017	0.000029	-0.000335	0.000515	4.846E-06	9.343E-06
241	LIVE	-0.000019	-0.000023	-0.000281	0.000389	0.000012	8.223E-06
241	SX	0.006812	0.003165	0.000071	0.00005	3.389E-06	0.000306
241	SY	0.002616	0.006574	0.000028	0.000021	7.196E-06	0.001075
241	WB	-3.472E-06	-3.222E-06	-2.759E-06	-3.029E-06	7.774E-07	1.957E-07
242	DEAD	0.000017	0.000047	-0.000775	0.000612	0.000521	0.00001
242	LIVE	-0.000019	-7.663E-06	-0.00065	0.000491	0.000425	8.711E-06
242	SX	0.006813	0.003538	0.000074	0.000058	0.000024	0.000306
242	SY	0.002614	0.006167	0.000034	0.000023	8.281E-06	0.001075
242	WB	-3.463E-06	-2.897E-06	-2.517E-06	-2.246E-06	-1.512E-06	1.740E-07
243	DEAD	0.000016	0.000056	-0.001268	0.000436	0.000383	0.000011
243	LIVE	-0.00002	8.501E-08	-0.001048	0.000395	0.000305	9.148E-06
243	SX	0.006814	0.003741	0.000044	4.129E-06	0.000052	0.000306
243	SY	0.002611	0.006183	0.000023	7.317E-06	0.000019	0.001073
243	WB	-3.465E-06	-2.743E-06	-6.468E-07	1.412E-06	-1.879E-06	1.884E-07
244	DEAD	0.000016	0.000065	-0.001451	0.000503	-0.000027	0.00001
244	LIVE	-0.00002	7.702E-06	-0.001189	0.000455	-0.000032	8.543E-06
244	SX	0.006814	0.003953	0.00002	0.000013	0.000067	0.000306
244	SY	0.002609	0.006349	0.000012	0.000013	0.000024	0.001073
244	WB	-3.466E-06	-2.602E-06	7.633E-07	2.143E-06	-9.551E-07	1.606E-07
245	DEAD	0.000016	0.000074	-0.001215	0.000409	-0.000435	0.00001
245	LIVE	-0.00002	0.000015	-0.000986	0.000367	-0.000369	8.514E-06
245	SX	0.006814	0.004171	0.000075	0.000017	0.000036	0.000306
245	SY	0.002606	0.006652	0.000026	9.616E-06	0.000014	0.001073
245	WB	-3.465E-06	-2.467E-06	1.085E-06	1.832E-06	1.003E-07	1.713E-07
246	DEAD	0.000015	0.000083	-0.000674	0.000223	-0.00057	0.000011
246	LIVE	-0.000021	0.000023	-0.000532	0.000197	-0.000478	8.831E-06
246	SX	0.006814	0.004397	0.00008	0.000021	0.00006	0.000306
246	SY	0.002604	0.007075	0.000029	0.000018	0.00002	0.001073
246	WB	-3.463E-06	-2.330E-06	6.218E-07	1.283E-06	5.590E-07	1.637E-07
247	DEAD	0.000016	-0.000111	-0.000604	0.000196	0.000217	9.870E-06
247	LIVE	-0.000021	-0.000152	-0.000489	0.000173	0.000194	8.304E-06
247	SX	0.006811	0.003141	0.000092	0.000057	0.00004	0.000307
247	SY	0.002615	0.017292	0.000068	0.000037	0.000061	0.001071
247	WB	-3.593E-06	-6.442E-06	-5.238E-06	1.568E-06	2.549E-06	1.544E-07
248	DEAD	0.000017	-0.000058	-0.000518	-0.000093	0.000077	9.809E-06
248	LIVE	-0.00002	-0.000102	-0.000509	-0.000191	0.000094	8.941E-06
248	SX	0.006811	0.002498	0.000026	0.000033	0.00006	0.000307
248	SY	0.002615	0.012516	0.000033	0.000022	0.000035	0.001073
248	WB	-3.533E-06	-5.129E-06	-0.00001	-0.000013	2.742E-06	2.295E-07
249	DEAD	0.000017	-0.000047	-0.000475	-0.000259	-0.000146	0.000011
249	LIVE	-0.00002	-0.000092	-0.000468	-0.000389	-0.000159	9.507E-06
249	SX	0.006811	0.00246	0.000058	0.000039	0.000038	0.000306
249	SY	0.002615	0.011526	0.000019	0.000012	0.00003	0.001072
249	WB	-3.528E-06	-4.867E-06	-9.657E-06	-0.000019	-3.515E-06	2.164E-07
250	DEAD	0.000016	-0.00002	-0.000378	-0.000315	0.000062	0.000011
250	LIVE	-0.00002	-0.000067	-0.00038	-0.00046	0.000082	9.282E-06
250	SX	0.006811	0.002532	0.000021	0.000027	0.000038	0.000307

Table 28: Joint Displacements

Joint	OutputCase	U1	U2	U3	R1	R2	R3
		m	m	m	Radians	Radians	Radians
250	SY	0.002615	0.009465	0.000014	9.063E-06	0.000012	0.001072
250	WB	-3.517E-06	-4.242E-06	-9.091E-06	-0.00002	2.792E-06	2.002E-07
251	DEAD	0.000016	-9.012E-06	-0.000338	-0.000529	-0.000111	9.904E-06
251	LIVE	-0.00002	-0.000057	-0.000339	-0.000806	-0.000137	8.755E-06
251	SX	0.006811	0.002631	0.000041	0.000026	0.000016	0.000307
251	SY	0.002615	0.008622	0.000022	0.000012	6.707E-06	0.00107
251	WB	-3.513E-06	-4.003E-06	-8.282E-06	-0.000036	-4.216E-06	2.129E-07
252	DEAD	-0.000036	-0.000115	-0.000235	0.000551	0.000105	7.823E-06
252	LIVE	-0.000068	-0.000155	-0.000161	0.000449	0.000087	6.965E-06
252	SX	0.006876	0.003273	0.000062	0.00007	0.000016	0.000308
252	SY	0.005073	0.017952	0.000064	0.000086	6.263E-06	0.00107
252	WB	-4.813E-06	-6.484E-06	4.951E-08	3.189E-07	8.732E-09	1.834E-07
253	DEAD	-0.000036	-0.000107	-0.000303	0.000675	8.661E-06	9.997E-06
253	LIVE	-0.000068	-0.000148	-0.000219	0.000558	7.983E-06	9.217E-06
253	SX	0.006876	0.003097	0.000011	5.277E-06	0.000066	0.000307
253	SY	0.005074	0.017051	0.000034	0.000014	0.000042	0.001072
253	WB	-4.814E-06	-6.293E-06	7.766E-10	4.261E-07	6.274E-08	2.389E-07
254	DEAD	-0.000036	-0.000099	-0.00025	0.000577	-0.000099	7.478E-06
254	LIVE	-0.000068	-0.000141	-0.000175	0.000478	-0.000082	6.814E-06
254	SX	0.006876	0.002936	0.000051	0.000057	5.734E-06	0.000308
254	SY	0.005074	0.016156	0.000026	0.000036	4.449E-06	0.001071
254	WB	-4.814E-06	-6.098E-06	-6.002E-08	6.602E-07	3.017E-08	1.946E-07
255	DEAD	-0.000016	-0.000124	-0.000462	-1.469E-06	0.00075	7.640E-06
255	LIVE	-0.00005	-0.000163	-0.000333	-2.232E-06	0.000653	6.794E-06
255	SX	0.006796	0.00347	0.000033	0.000028	9.443E-06	0.000308
255	SY	0.003068	0.018896	0.000014	0.000136	4.141E-06	0.001071
255	WB	-4.337E-06	-6.685E-06	-2.078E-07	-7.178E-08	5.004E-07	1.786E-07
256	DEAD	4.089E-06	-0.000115	-0.000277	-0.000527	0.000142	7.177E-06
256	LIVE	-0.000032	-0.000155	-0.000203	-0.000426	0.000124	6.144E-06
256	SX	0.006784	0.003273	0.000052	0.000055	0.000015	0.000308
256	SY	0.002132	0.017953	0.000034	0.000056	0.000015	0.001068
256	WB	-3.863E-06	-6.493E-06	-2.040E-06	7.402E-07	1.798E-06	1.459E-07
257	DEAD	3.969E-06	-0.000111	-0.000363	0.000189	0.000066	9.956E-06
257	LIVE	-0.000032	-0.000152	-0.000278	0.000163	0.00006	9.757E-06
257	SX	0.006785	0.003141	0.00002	0.000058	0.000058	0.000306
257	SY	0.002132	0.017291	0.000021	0.000037	0.000023	0.001077
257	WB	-3.864E-06	-6.422E-06	-3.258E-06	1.586E-06	8.387E-07	3.049E-07
258	DEAD	3.931E-06	-0.000108	-0.000376	-0.000631	0.000024	0.000011
258	LIVE	-0.000032	-0.000148	-0.00029	-0.000515	0.000024	0.00001
258	SX	0.006785	0.003097	2.981E-06	3.112E-06	0.000065	0.000306
258	SY	0.002132	0.017052	0.000017	2.829E-06	0.000025	0.001074
258	WB	-3.862E-06	-6.312E-06	-3.337E-06	1.295E-06	2.909E-07	2.769E-07
259	DEAD	3.800E-06	-0.000099	-0.000323	-0.000529	-0.000103	7.844E-06
259	LIVE	-0.000032	-0.000141	-0.000249	-0.000433	-0.000084	7.176E-06
259	SX	0.006784	0.002936	0.00006	0.000068	7.828E-06	0.000308
259	SY	0.002132	0.016156	0.000019	0.000024	0.000011	0.001072
259	WB	-3.859E-06	-6.099E-06	-2.774E-06	5.840E-07	-8.824E-07	2.056E-07
260	DEAD	-0.000016	-0.00009	-0.000434	-9.594E-06	-0.00076	7.331E-06
260	LIVE	-0.00005	-0.000132	-0.000344	-1.829E-06	-0.000642	6.788E-06
260	SX	0.006796	0.002769	0.000041	0.000025	0.000012	0.000308
260	SY	0.003068	0.015101	0.000025	0.000098	0.000013	0.001071
260	WB	-4.342E-06	-5.864E-06	-2.087E-06	3.782E-07	5.587E-07	2.065E-07
261	DEAD	-0.000016	-0.000115	-0.001119	8.655E-06	0.000524	0.00001
261	LIVE	-0.00005	-0.000155	-0.000906	8.203E-06	0.000459	9.494E-06

Table 28: Joint Displacements

Joint	OutputCase	U1	U2	U3	R1	R2	R3
		m	m	m	Radians	Radians	Radians
261	SX	0.006796	0.003273	0.000023	5.314E-06	0.000019	0.000306
261	SY	0.003068	0.017952	9.200E-06	0.000027	7.109E-06	0.001073
261	WB	-4.337E-06	-6.487E-06	-6.690E-07	4.068E-07	4.681E-07	2.512E-07
262	DEAD	-0.000016	-0.000107	-0.001385	0.000014	0.000033	7.534E-06
262	LIVE	-0.00005	-0.000148	-0.001142	0.000014	0.000038	6.718E-06
262	SX	0.006796	0.003097	8.445E-07	4.220E-06	0.000028	0.000308
262	SY	0.003068	0.017051	3.550E-06	0.000017	0.00001	0.00107
262	WB	-4.339E-06	-6.293E-06	-1.071E-06	6.338E-07	4.537E-07	1.803E-07
263	DEAD	-0.000016	-0.000099	-0.001176	8.781E-06	-0.000477	0.00001
263	LIVE	-0.00005	-0.000141	-0.000971	0.000011	-0.0004	9.383E-06
263	SX	0.006796	0.002936	0.000025	3.241E-06	0.000022	0.000307
263	SY	0.003068	0.016156	0.000012	0.000011	0.000011	0.001072
263	WB	-4.342E-06	-6.102E-06	-1.499E-06	5.936E-07	5.115E-07	2.342E-07
264	DEAD	4.271E-06	-0.000076	-0.000191	0.000032	0.000337	0.000011
264	LIVE	-0.000032	-0.00012	-0.000204	0.000014	0.000412	0.00001
264	SX	0.006784	0.002628	0.000015	0.000013	5.224E-06	0.000307
264	SY	0.00214	0.014006	0.000028	0.000021	8.713E-06	0.001073
264	WB	-3.820E-06	-5.564E-06	-7.557E-06	-1.466E-06	0.000014	2.645E-07
265	DEAD	4.141E-06	-0.000058	-0.00059	0.000055	0.000145	0.000011
265	LIVE	-0.000031	-0.000103	-0.000676	0.000032	0.000167	0.00001
265	SX	0.006784	0.002498	6.739E-06	6.489E-06	4.822E-06	0.000307
265	SY	0.00214	0.012517	7.475E-06	0.000023	0.000015	0.001073
265	WB	-3.802E-06	-5.142E-06	-0.000022	-2.649E-06	5.082E-06	2.518E-07
266	DEAD	4.050E-06	-0.000047	-0.00071	0.000019	0.000116	0.000011
266	LIVE	-0.000031	-0.000092	-0.000828	-5.867E-06	0.000162	9.815E-06
266	SX	0.006784	0.00246	0.000019	0.00001	4.613E-06	0.000307
266	SY	0.00214	0.011526	8.485E-06	4.557E-06	7.762E-06	0.001072
266	WB	-3.793E-06	-4.869E-06	-0.000028	-3.419E-06	6.230E-06	2.511E-07
267	DEAD	3.981E-06	-0.000038	-0.000804	0.000434	0.000046	0.000011
267	LIVE	-0.000031	-0.000084	-0.000966	0.000593	0.000075	0.00001
267	SX	0.006784	0.00246	0.000016	0.00002	5.024E-06	0.000307
267	SY	0.00214	0.010837	0.000011	0.00001	2.525E-06	0.001074
267	WB	-3.787E-06	-4.668E-06	-0.000033	0.000021	3.381E-06	2.570E-07
268	DEAD	3.922E-06	-0.000028	-0.000765	0.000427	-0.000096	0.000011
268	LIVE	-0.000031	-0.000075	-0.000925	0.000585	-0.000113	9.993E-06
268	SX	0.006784	0.002489	0.000011	5.928E-06	6.007E-06	0.000307
268	SY	0.00214	0.010058	9.590E-06	7.598E-06	2.210E-06	0.001072
268	WB	-3.782E-06	-4.434E-06	-0.000032	0.000021	-3.407E-06	2.521E-07
269	DEAD	3.883E-06	-0.00002	-0.000673	-6.612E-07	-0.000022	0.000011
269	LIVE	-0.000031	-0.000068	-0.000815	-0.000023	5.667E-06	9.715E-06
269	SX	0.006784	0.002532	7.107E-06	9.914E-06	1.162E-06	0.000307
269	SY	0.00214	0.009467	8.435E-06	5.451E-06	1.068E-06	0.001073
269	WB	-3.778E-06	-4.254E-06	-0.000029	-2.986E-06	1.878E-06	2.406E-07
270	DEAD	3.853E-06	-9.000E-06	-0.000839	-0.000044	0.000364	0.000011
270	LIVE	-0.000031	-0.000057	-0.001108	-0.000088	0.000597	9.619E-06
270	SX	0.006784	0.002631	0.000013	0.000016	7.573E-06	0.000306
270	SY	0.00214	0.008623	8.388E-06	8.986E-06	3.640E-06	0.001074
270	WB	-3.772E-06	-4.008E-06	-0.000043	-5.594E-06	0.000027	2.225E-07
271	DEAD	3.844E-06	-1.305E-06	-0.00121	0.000691	0.000447	0.00001
271	LIVE	-0.000031	-0.000051	-0.001706	0.001049	0.000731	9.362E-06
271	SX	0.006785	0.002719	0.000018	0.000036	4.860E-06	0.000307
271	SY	0.00214	0.008095	7.808E-06	0.000012	4.484E-06	0.001073
271	WB	-3.766E-06	-3.850E-06	-0.000069	0.000043	0.000033	2.188E-07
272	DEAD	3.847E-06	8.569E-06	-0.001525	0.000967	0.000125	0.000011

Table 28: Joint Displacements

Joint	OutputCase	U1	U2	U3	R1	R2	R3
		m	m	m	Radians	Radians	Radians
272	LIVE	-0.000031	-0.000042	-0.002239	0.001517	0.000244	9.555E-06
272	SX	0.006785	0.002853	0.000018	0.000048	7.351E-06	0.000306
272	SY	0.00214	0.007482	7.251E-06	0.000017	5.380E-06	0.001075
272	WB	-3.758E-06	-3.650E-06	-0.000094	0.000064	0.000013	2.147E-07
273	DEAD	3.862E-06	0.000018	-0.001438	0.000889	-0.000303	0.00001
273	LIVE	-0.000031	-0.000033	-0.002148	0.001436	-0.000438	9.240E-06
273	SX	0.006786	0.003001	7.597E-06	0.000016	0.000016	0.000306
273	SY	0.00214	0.006977	8.164E-06	0.000018	7.428E-06	0.001075
273	WB	-3.749E-06	-3.460E-06	-0.000092	0.000062	-0.000018	2.154E-07
274	DEAD	3.868E-06	0.000028	-0.001002	0.00055	-0.000538	0.000011
274	LIVE	-0.000031	-0.000025	-0.00148	0.000922	-0.000874	9.582E-06
274	SX	0.006786	0.003166	0.000012	0.000026	0.000016	0.000306
274	SY	0.002141	0.006576	0.000012	0.000018	5.943E-06	0.001075
274	WB	-3.740E-06	-3.270E-06	-0.000064	0.00004	-0.00004	2.139E-07
275	DEAD	3.902E-06	0.000039	-0.000496	0.00002	-0.00002	0.00001
275	LIVE	-0.000031	-0.000014	-0.000557	-0.000061	-0.000288	9.348E-06
275	SX	0.006788	0.00339	0.000026	0.000017	0.000014	0.000306
275	SY	0.002141	0.006255	0.000015	0.000029	5.408E-06	0.001075
275	WB	-3.720E-06	-3.034E-06	-0.000017	-7.729E-06	-0.000025	2.202E-07
276	DEAD	-0.000023	-0.000124	-0.00039	0.000138	0.000605	8.725E-06
276	LIVE	-0.000056	-0.000163	-0.000276	0.000108	0.000517	7.997E-06
276	SX	0.006824	0.00347	0.000051	0.000015	0.000041	0.000308
276	SY	0.003736	0.018895	0.000119	0.00007	0.000102	0.001074
276	WB	-4.501E-06	-6.683E-06	-2.566E-07	1.250E-08	1.713E-07	2.181E-07
277	DEAD	-0.000023	-0.00009	-0.000374	0.000124	-0.000618	8.786E-06
277	LIVE	-0.000056	-0.000132	-0.000286	0.000112	-0.000515	7.960E-06
277	SX	0.006824	0.002769	0.000032	0.000013	0.000021	0.000308
277	SY	0.003736	0.015101	0.000095	0.000037	0.00006	0.001073
277	WB	-4.505E-06	-5.867E-06	-1.539E-06	8.461E-07	4.272E-07	2.053E-07
278	DEAD	-0.000018	0.000083	-0.00038	0.000083	-0.000261	0.00001
278	LIVE	-0.000048	0.000022	-0.000272	0.000076	-0.000204	8.131E-06
278	SX	0.006801	0.004396	0.000069	4.922E-06	0.000049	0.000306
278	SY	0.002983	0.007075	0.000025	7.626E-06	0.000021	0.001071
278	WB	-4.004E-06	-2.374E-06	2.542E-07	-7.845E-07	2.798E-07	1.324E-07
279	DEAD	-0.000046	0.000083	-0.000237	0.000079	-0.000171	9.740E-06
279	LIVE	-0.000071	0.000022	-0.000158	0.000031	-0.000135	7.684E-06
279	SX	0.00691	0.004396	0.000098	0.000082	0.00007	0.000306
279	SY	0.005531	0.007074	0.00008	0.000077	0.000034	0.001072
279	WB	-4.358E-06	-2.395E-06	6.790E-08	3.835E-07	-1.934E-07	1.149E-07
280	DEAD	-0.000018	0.000074	-0.000597	0.000109	-0.000126	9.882E-06
280	LIVE	-0.000048	0.000015	-0.000439	0.000099	-0.000093	8.045E-06
280	SX	0.006801	0.004171	0.000042	3.950E-06	0.000057	0.000306
280	SY	0.002982	0.006652	0.000016	5.496E-06	0.000021	0.001072
280	WB	-4.007E-06	-2.494E-06	4.881E-07	-1.352E-06	7.155E-08	1.404E-07
281	DEAD	-0.000046	0.000074	-0.000389	0.000055	-0.000103	0.00001
281	LIVE	-0.000071	0.000015	-0.000277	-1.941E-06	-0.000077	8.015E-06
281	SX	0.00691	0.004171	0.000079	0.000047	0.000061	0.000306
281	SY	0.005537	0.006651	0.000065	0.000039	0.000051	0.001071
281	WB	-4.363E-06	-2.502E-06	-9.399E-08	2.981E-07	-1.338E-07	1.206E-07
282	DEAD	-0.000018	0.000065	-0.000603	0.00011	0.000113	0.00001
282	LIVE	-0.000048	7.278E-06	-0.000436	0.000101	0.000099	8.098E-06
282	SX	0.006801	0.003952	0.000031	8.568E-06	0.000065	0.000307
282	SY	0.002982	0.006348	0.000015	0.00001	0.000025	0.001071
282	WB	-4.010E-06	-2.614E-06	3.794E-07	-1.341E-06	-2.779E-07	1.252E-07

Table 28: Joint Displacements

Joint	OutputCase	U1	U2	U3	R1	R2	R3
		m	m	m	Radians	Radians	Radians
283	DEAD	-0.000046	0.000065	-0.000419	0.000042	0.000044	9.928E-06
283	LIVE	-0.000071	7.225E-06	-0.000294	-0.000014	0.000045	8.022E-06
283	SX	0.006911	0.003952	0.000027	0.000017	0.00008	0.000306
283	SY	0.005542	0.006347	0.000057	0.000027	0.000057	0.001072
283	WB	-4.368E-06	-2.619E-06	-1.675E-07	2.405E-07	-2.525E-08	1.342E-07
284	DEAD	-0.000018	0.000056	-0.000398	0.000102	0.000253	9.965E-06
284	LIVE	-0.000048	-1.756E-07	-0.000264	0.000099	0.000211	8.306E-06
284	SX	0.006802	0.00374	0.000071	0.000016	0.000023	0.000305
284	SY	0.002982	0.006181	0.000029	0.000021	0.00001	0.001074
284	WB	-4.014E-06	-2.741E-06	2.783E-09	-4.124E-07	-2.932E-07	1.580E-07
285	DEAD	-0.000046	0.000056	-0.000311	0.000054	0.000146	0.00001
285	LIVE	-0.000071	-4.625E-08	-0.000198	6.434E-06	0.000129	7.885E-06
285	SX	0.006912	0.003739	0.000071	0.000061	0.000012	0.000307
285	SY	0.005548	0.006178	0.00008	0.000056	0.000016	0.001068
285	WB	-4.369E-06	-2.730E-06	-1.370E-07	1.454E-07	7.504E-08	1.050E-07
286	DEAD	-0.000036	-0.000159	-0.000128	0.000021	4.937E-06	-9.553E-06
286	LIVE	-0.00007	-0.0002	-0.000069	0.000017	3.250E-06	-7.569E-06
286	SX	0.007551	0.003702	0.000035	0.000012	0.000063	0.000334
286	SY	0.005452	0.020021	0.00003	0.000054	0.000035	0.001147
286	WB	-5.024E-06	-7.833E-06	9.803E-09	9.196E-08	2.353E-10	8.489E-08
287	DEAD	-0.000039	-0.000284	-0.000125	0.000048	-6.187E-06	-9.606E-06
287	LIVE	-0.000071	-0.00031	-0.000067	0.000041	-3.818E-06	-7.617E-06
287	SX	0.007551	0.00296	0.000045	0.000011	0.000063	0.000334
287	SY	0.005452	0.015931	0.000053	0.000034	0.000034	0.001147
287	WB	-5.024E-06	-8.722E-06	-3.081E-08	4.268E-07	-1.130E-09	8.140E-08
288	DEAD	0.00004	-0.000156	-0.000137	-0.000015	0.000017	-9.815E-06
288	LIVE	5.375E-06	-0.000198	-0.000078	-0.000011	0.000016	-7.758E-06
288	SX	0.007436	0.003702	0.000043	0.000012	0.00006	0.000334
288	SY	0.002334	0.020021	0.000046	0.000054	0.000021	0.001147
288	WB	-3.003E-06	-7.832E-06	-3.026E-07	1.012E-07	1.970E-07	8.465E-08
289	DEAD	0.000037	-0.000282	-0.000192	-0.000012	9.242E-06	-9.834E-06
289	LIVE	3.365E-06	-0.000309	-0.000137	-4.418E-06	0.000012	-7.789E-06
289	SX	0.007436	0.00296	0.000029	0.000011	0.00006	0.000334
289	SY	0.002334	0.01593	9.310E-06	0.000047	0.000022	0.001147
289	WB	-3.025E-06	-8.725E-06	-1.681E-06	3.716E-07	4.623E-07	8.050E-08
290	DEAD	-0.000016	-0.000545	-0.000098	0.000122	0.000011	0.000088
290	LIVE	-0.00005	-0.000515	-0.000075	0.000099	5.715E-06	0.000063
290	SX	0.00732	0.002827	0.000029	0.000017	0.000065	0.000403
290	SY	0.002766	0.014958	0.000048	0.000083	0.000022	0.001061
290	WB	-4.288E-06	-6.763E-06	-2.896E-06	-3.406E-07	-5.381E-07	-8.657E-07
291	DEAD	-0.000088	-0.000089	-0.000157	0.000036	-2.704E-06	0.000031
291	LIVE	-0.000082	-0.000135	-0.000061	0.000035	7.511E-06	0.000015
291	SX	0.007764	0.003953	0.000062	0.000045	0.000145	0.000337
291	SY	0.006086	0.006955	0.000079	0.00008	0.000082	0.001153
291	WB	-4.073E-06	-4.321E-06	-6.448E-09	1.537E-07	3.221E-09	-1.086E-06
292	DEAD	-0.000093	-0.000049	-0.000105	0.00004	-0.00002	7.867E-06
292	LIVE	-0.000087	-0.000222	-0.00005	0.000052	-0.000012	-5.226E-06
292	SX	0.007763	0.005161	0.00004	0.000058	0.000136	0.000339
292	SY	0.006054	0.008434	0.000037	0.000097	0.000089	0.001154
292	WB	-4.162E-06	-0.000017	2.810E-07	1.801E-06	6.833E-08	-1.150E-06
293	DEAD	-0.000038	-0.000049	-0.00016	0.000026	3.777E-06	0.00003
293	LIVE	-0.000045	-0.000223	-0.000098	0.000031	6.466E-06	0.000018
293	SX	0.007568	0.005168	0.000036	0.000035	0.000115	0.000337
293	SY	0.003288	0.008448	0.000023	0.000057	0.000047	0.001155

Table 28: Joint Displacements

Joint	OutputCase	U1	U2	U3	R1	R2	R3
		m	m	m	Radians	Radians	Radians
293	WB	-3.881E-06	-0.000017	-2.051E-08	1.078E-06	1.698E-08	-4.005E-07
294	DEAD	-0.000031	-0.000085	-0.000179	5.089E-06	-0.000011	-0.000031
294	LIVE	-0.000039	-0.000132	-0.00008	1.623E-06	8.328E-08	-0.000037
294	SX	0.007567	0.004006	5.061E-06	0.000046	0.000133	0.000343
294	SY	0.003285	0.006947	7.691E-06	0.000081	0.000053	0.001156
294	WB	-3.891E-06	-4.311E-06	-9.602E-08	1.635E-07	-2.592E-08	-7.198E-07
295	DEAD	5.276E-06	-0.00005	-0.000239	0.000019	0.00001	-0.00003
295	LIVE	-0.000037	-0.000226	-0.000165	0.000023	-2.405E-07	-0.000054
295	SX	0.007431	0.00517	0.000023	0.000035	0.000095	0.000338
295	SY	0.002804	0.008452	0.000011	0.000059	0.000031	0.001135
295	WB	-4.309E-06	-0.000017	1.771E-07	3.132E-07	-4.464E-07	-2.727E-06
296	DEAD	0.000038	-0.000052	-0.000192	0.000105	-0.000013	0.000101
296	LIVE	-0.000032	-0.000233	-0.00015	0.000164	-0.000021	0.000172
296	SX	0.007875	0.005113	0.000018	0.000063	0.000124	0.000306
296	SY	0.007781	0.008322	0.000017	0.000106	0.000086	0.0012
296	WB	-6.006E-06	-0.000018	-2.159E-06	9.159E-06	-7.868E-07	9.789E-06
297	DEAD	-0.00002	-0.00015	-0.000132	0.000035	-6.039E-06	0.000061
297	LIVE	-0.000054	-0.000214	-0.000111	0.00004	-3.884E-06	0.000048
297	SX	0.007318	0.003499	0.000023	0.000321	0.000052	0.000451
297	SY	0.002765	0.012736	7.986E-06	0.000893	0.000018	0.001118
297	WB	-4.396E-06	-8.664E-06	-3.922E-06	1.125E-06	2.364E-07	-2.467E-08
298	DEAD	-0.000022	-0.000097	-0.000129	0.000027	9.670E-06	-0.000018
298	LIVE	-0.000056	-0.000168	-0.000106	0.000032	8.647E-06	-0.000011
298	SX	0.007318	0.003878	0.000025	0.00035	0.000052	0.000292
298	SY	0.002766	0.010809	9.176E-06	0.0009	0.000018	0.001321
298	WB	-4.441E-06	-7.882E-06	-3.713E-06	9.991E-07	-8.543E-08	7.140E-07
299	DEAD	0.000034	-0.000544	-0.000294	0.000041	-2.842E-06	-0.000089
299	LIVE	-0.00001	-0.000513	-0.000243	0.00004	-4.885E-06	-0.000052
299	SX	0.007424	0.002813	0.000013	0.000023	0.000068	0.000333
299	SY	0.002817	0.014801	0.000056	0.000108	0.000023	0.001148
299	WB	-4.057E-06	-6.722E-06	-3.205E-06	7.124E-07	2.888E-08	2.407E-06
300	DEAD	0.000053	-0.000529	-0.000282	0.000748	-1.325E-06	0.000079
300	LIVE	-8.607E-06	-0.001051	-0.000238	0.000988	-3.316E-06	0.000137
300	SX	0.007869	0.004014	0.000012	0.0002	0.000087	0.000315
300	SY	0.00778	0.00765	0.000018	0.000427	0.000059	0.001199
300	WB	-4.824E-06	-0.000065	-3.133E-06	0.000042	-3.729E-07	7.916E-06
301	DEAD	0.00007	-0.000737	-0.000219	0.000709	6.203E-06	0.000037
301	LIVE	0.000023	-0.001401	-0.000179	0.001006	5.274E-06	0.000058
301	SX	0.007861	0.003395	9.092E-06	0.000216	0.000082	0.000334
301	SY	0.007784	0.009677	0.000023	0.000537	0.000057	0.001183
301	WB	-2.924E-06	-0.000085	-2.615E-06	0.000045	-2.920E-08	3.040E-06
302	DEAD	0.000085	-0.000805	-0.000226	0.000731	-6.253E-06	8.380E-06
302	LIVE	0.000051	-0.001488	-0.000185	0.001036	-4.736E-06	3.240E-07
302	SX	0.007857	0.003064	0.000018	0.000199	0.000081	0.000347
302	SY	0.007791	0.012133	0.000018	0.000584	0.000057	0.001166
302	WB	-1.201E-06	-0.000088	-2.684E-06	0.000046	8.841E-08	-5.814E-07
303	DEAD	0.000103	-0.000756	-0.00029	0.000792	4.875E-06	-0.000034
303	LIVE	0.000084	-0.001336	-0.000243	0.001057	7.334E-06	-0.00008
303	SX	0.007853	0.003051	0.000013	0.000158	0.000084	0.00036
303	SY	0.007803	0.015684	0.000018	0.000568	0.00006	0.001137
303	WB	7.513E-07	-0.000077	-3.229E-06	0.000045	4.568E-07	-5.476E-06
304	DEAD	0.000117	-0.000522	-0.000191	0.000152	0.000018	-0.000056
304	LIVE	0.000106	-0.00083	-0.000151	0.000227	0.000027	-0.000115
304	SX	0.007853	0.003808	0.000026	0.000044	0.000116	0.000362

Table 28: Joint Displacements

Joint	OutputCase	U1	U2	U3	R1	R2	R3
		m	m	m	Radians	Radians	Radians
304	SY	0.007813	0.020653	0.000028	0.000211	0.000088	0.001118
304	WB	1.862E-06	-0.000043	-2.326E-06	0.000012	9.819E-07	-7.423E-06
305	DEAD	0.000043	-0.000523	-0.000152	0.000057	0.000017	0.000043
305	LIVE	-2.261E-06	-0.000828	-0.00009	0.000093	0.000019	0.000102
305	SX	0.007428	0.003807	0.000017	0.000044	0.000092	0.000332
305	SY	0.002819	0.020648	0.000038	0.000207	0.000032	0.001237
305	WB	-3.955E-06	-0.000043	7.370E-08	3.749E-06	-1.936E-07	7.360E-06
306	DEAD	-0.000025	-0.000375	-0.000118	0.000096	-0.000018	-0.000086
306	LIVE	-0.000059	-0.000369	-0.000095	0.000068	-0.000015	-0.000067
306	SX	0.007321	0.003864	0.000033	0.000039	0.000064	0.000266
306	SY	0.002767	0.006916	0.000033	0.000066	0.000023	0.001234
306	WB	-4.486E-06	-3.501E-06	-3.245E-06	-1.585E-06	1.890E-07	7.137E-07
307	DEAD	0.000024	-0.000384	-0.00036	0.000073	1.053E-06	0.000229
307	LIVE	-0.000022	-0.000374	-0.000305	0.000079	6.548E-07	0.000185
307	SX	0.007426	0.003722	0.000014	0.000047	0.000067	0.00035
307	SY	0.002819	0.007007	0.000021	0.000087	0.000023	0.001158
307	WB	-4.332E-06	-3.435E-06	-3.368E-06	1.694E-06	-3.101E-07	-6.027E-07
308	DEAD	0.000026	-0.001314	-0.000224	0.00034	0.000022	0.000171
308	LIVE	-0.00002	-0.001122	-0.000186	0.000278	0.000023	0.000137
308	SX	0.007422	0.003315	0.000013	0.000186	0.000062	0.000303
308	SY	0.002817	0.009441	0.000017	0.000459	0.000022	0.001253
308	WB	-4.298E-06	-2.035E-06	-2.963E-06	-4.307E-07	3.887E-07	-1.014E-08
309	DEAD	0.000029	-0.001343	-0.000238	0.000334	-7.123E-06	-0.000155
309	LIVE	-0.000016	-0.001143	-0.0002	0.000271	-7.667E-06	-0.000127
309	SX	0.007422	0.002979	0.00001	0.000168	0.000065	0.000384
309	SY	0.002817	0.01187	0.000021	0.000484	0.000021	0.001083
309	WB	-4.190E-06	-2.810E-06	-3.312E-06	-5.287E-07	-1.993E-07	3.703E-07
310	DEAD	-0.000031	-0.000093	-0.000182	0.000135	1.293E-06	-0.000037
310	LIVE	-0.000039	-0.000141	-0.000084	0.000141	0.000012	-0.000045
310	SX	0.007567	0.004056	0.000019	2.668E-06	0.000104	0.00034
310	SY	0.003285	0.006948	0.000011	5.879E-06	0.000042	0.001151
310	WB	-3.890E-06	-4.493E-06	-9.056E-08	7.914E-07	-2.694E-08	-1.061E-06
311	DEAD	0.000019	-0.000095	-0.000422	7.853E-06	0.00004	0.000161
311	LIVE	-0.000026	-0.000143	-0.000362	0.000023	0.000035	0.000123
311	SX	0.007427	0.004056	0.000025	2.322E-06	1.420E-06	0.000353
311	SY	0.002815	0.006948	0.000025	5.484E-06	1.468E-06	0.001153
311	WB	-4.338E-06	-4.497E-06	-2.768E-06	7.982E-07	-6.207E-07	-1.124E-06
312	DEAD	0.000139	-0.000053	-0.000366	0.000187	-0.000314	0.000111
312	LIVE	0.000141	-0.000233	-0.000405	0.000275	-0.000242	0.000191
312	SX	0.007945	0.005113	0.000067	0.000064	0.000032	0.000302
312	SY	0.00888	0.008322	0.000114	0.000107	0.000072	0.001206
312	WB	3.895E-06	-0.000018	-0.000015	0.000014	-8.525E-06	0.000011
313	DEAD	0.000126	-0.000529	-0.00112	0.000883	0.000014	0.000074
313	LIVE	0.000118	-0.001051	-0.001339	0.00116	-0.000055	0.000128
313	SX	0.007949	0.004014	0.000192	0.000199	0.000015	0.000317
313	SY	0.008878	0.00765	0.000424	0.000427	0.00005	0.001196
313	WB	2.459E-06	-0.000065	-0.000049	0.000049	-2.827E-06	7.366E-06
314	DEAD	0.000108	-0.000737	-0.000995	0.000816	0.000029	0.000041
314	LIVE	0.000081	-0.001401	-0.001273	0.00115	0.000026	0.000064
314	SX	0.007957	0.003395	0.00021	0.000217	0.00001	0.000333
314	SY	0.008873	0.009677	0.000537	0.000538	0.000031	0.001185
314	WB	1.665E-07	-0.000085	-0.000051	0.000051	1.829E-07	3.424E-06
315	DEAD	0.000091	-0.000805	-0.001025	0.00084	-0.000047	5.036E-06
315	LIVE	0.000049	-0.001488	-0.001309	0.001183	-0.000047	-5.567E-06

Table 28: Joint Displacements

Joint	OutputCase	U1	U2	U3	R1	R2	R3
		m	m	m	Radians	Radians	Radians
315	SX	0.007963	0.003064	0.000205	0.000199	0.000013	0.000348
315	SY	0.008864	0.012133	0.000579	0.000587	0.000029	0.001165
315	WB	-1.909E-06	-0.000088	-0.000052	0.000052	-1.187E-06	-9.240E-07
316	DEAD	0.000072	-0.000756	-0.001171	0.000927	-1.348E-06	-0.00003
316	LIVE	0.000011	-0.001336	-0.001411	0.00123	0.00006	-0.000073
316	SX	0.00797	0.003051	0.000163	0.000158	0.000019	0.000358
316	SY	0.00885	0.015684	0.000562	0.000567	0.000039	0.001138
316	WB	-4.258E-06	-0.000077	-0.000053	0.000052	2.866E-06	-5.067E-06
317	DEAD	0.00006	-0.000522	-0.000408	0.000232	0.000309	-0.000064
317	LIVE	-0.000011	-0.00083	-0.000464	0.000335	0.000252	-0.000129
317	SX	0.007973	0.003808	0.000064	0.000045	0.000025	0.000365
317	SY	0.00884	0.020653	0.00023	0.000212	0.000086	0.001118
317	WB	-5.588E-06	-0.000043	-0.000018	0.000016	9.097E-06	-8.221E-06
318	DEAD	7.042E-06	3.775E-06	-0.000248	0.000232	0.000057	4.975E-06
318	LIVE	-0.000021	-0.000017	-0.000284	0.000289	0.000072	4.432E-06
318	SX	0.004715	0.001734	0.000151	0.000102	0.000106	0.000214
318	SY	0.001839	0.009268	0.000073	0.00005	0.000045	0.000815
318	WB	-2.924E-06	-1.372E-06	-0.000011	9.756E-06	2.846E-06	1.259E-07
319	DEAD	7.426E-06	8.834E-06	-0.000242	0.000368	-0.000065	4.496E-06
319	LIVE	-0.00002	-0.000013	-0.000275	0.000465	-0.000084	3.932E-06
319	SX	0.004714	0.001665	0.000035	0.000049	0.000125	0.000214
319	SY	0.001839	0.008475	0.000014	0.000021	0.000053	0.000811
319	WB	-2.907E-06	-1.246E-06	-0.000011	0.000016	-3.463E-06	1.120E-07
320	DEAD	8.173E-06	0.00002	-0.000113	0.000579	0.000017	4.739E-06
320	LIVE	-0.00002	-2.866E-06	-0.000114	0.00076	0.000023	4.090E-06
320	SX	0.00471	0.001622	0.000032	0.000064	0.00002	0.000213
320	SY	0.001837	0.006793	0.000012	0.00002	8.001E-06	0.000815
320	WB	-2.879E-06	-9.826E-07	-4.346E-06	0.000029	9.399E-07	1.107E-07
321	DEAD	8.451E-06	0.000025	-0.000112	0.000705	-0.000023	4.796E-06
321	LIVE	-0.000019	1.631E-06	-0.000113	0.000965	-0.000033	4.183E-06
321	SX	0.004707	0.001654	0.000052	0.000012	0.00008	0.000214
321	SY	0.001836	0.006084	0.00002	9.081E-06	0.00003	0.000813
321	WB	-2.872E-06	-8.615E-07	-4.367E-06	0.000038	-1.333E-06	1.101E-07
322	DEAD	0.00002	0.000033	-0.002719	0.001179	0.000159	4.879E-06
322	LIVE	-9.014E-06	8.538E-06	-0.003921	0.001762	0.000267	4.227E-06
322	SX	0.004741	0.001761	0.000487	0.000221	0.000099	0.000213
322	SY	0.001749	0.005088	0.000165	0.000076	0.000036	0.000812
322	WB	-2.600E-06	-6.772E-07	-0.000157	0.000071	0.000012	1.078E-07
323	DEAD	8.978E-06	0.000033	-0.000127	0.000902	0.000041	4.860E-06
323	LIVE	-0.000019	8.430E-06	-0.000113	0.001289	0.000042	4.208E-06
323	SX	0.004702	0.001762	0.000098	0.000264	0.000067	0.000213
323	SY	0.001832	0.005089	0.000038	0.000092	0.000027	0.000812
323	WB	-2.860E-06	-6.793E-07	-4.321E-06	0.000052	1.698E-06	1.078E-07
324	DEAD	0.000022	0.000029	-0.002272	0.000811	0.000504	4.662E-06
324	LIVE	-7.892E-06	4.766E-06	-0.003171	0.001155	0.00076	3.953E-06
324	SX	0.004749	0.001693	0.000343	0.00014	0.000125	0.000212
324	SY	0.001886	0.00563	0.000112	0.000046	0.000044	0.000818
324	WB	-2.567E-06	-7.776E-07	-0.000125	0.000046	0.000032	1.074E-07
325	DEAD	8.664E-06	0.000029	-0.000085	0.000797	0.000013	4.535E-06
325	LIVE	-0.000019	4.654E-06	-0.000073	0.001112	6.570E-06	3.850E-06
325	SX	0.004706	0.001693	0.000065	0.000163	0.000245	0.000213
325	SY	0.001835	0.00563	0.000024	0.000058	0.000092	0.000812
325	WB	-2.866E-06	-7.800E-07	-2.729E-06	0.000044	1.897E-07	1.052E-07
326	DEAD	0.000021	0.000037	-0.002568	0.001101	-0.00035	4.217E-06

Table 28: Joint Displacements

Joint	OutputCase	U1	U2	U3	R1	R2	R3
		m	m	m	Radians	Radians	Radians
326	LIVE	-8.973E-06	0.000012	-0.00376	0.00168	-0.000481	3.576E-06
326	SX	0.004739	0.001845	0.000531	0.000196	0.000039	0.000212
326	SY	0.001749	0.004626	0.000183	0.000071	0.000016	0.000815
326	WB	-2.601E-06	-5.831E-07	-0.000152	0.000068	-0.000018	1.014E-07
327	DEAD	9.292E-06	0.000037	-0.000161	0.000833	0.000014	4.128E-06
327	LIVE	-0.000019	0.000012	-0.00015	0.001209	0.000018	3.452E-06
327	SX	0.004698	0.001846	0.000052	0.000189	0.000163	0.000212
327	SY	0.00183	0.004626	0.000026	0.000066	0.000062	0.000815
327	WB	-2.853E-06	-5.860E-07	-5.835E-06	0.000049	7.892E-07	9.569E-08
328	DEAD	0.000021	0.000041	-0.001699	0.000717	-0.000725	4.750E-06
328	LIVE	-8.999E-06	0.000016	-0.00252	0.00113	-0.001049	3.967E-06
328	SX	0.004739	0.001944	0.00048	0.000137	0.000044	0.000214
328	SY	0.001748	0.004241	0.000166	0.000049	0.000015	0.000807
328	WB	-2.605E-06	-4.931E-07	-0.000103	0.000046	-0.000042	8.723E-08
329	DEAD	9.609E-06	0.000041	-0.000153	0.000573	-0.000034	5.024E-06
329	LIVE	-0.000018	0.000015	-0.000146	0.000836	-0.000033	4.448E-06
329	SX	0.004694	0.001946	0.000198	0.000073	0.000064	0.000214
329	SY	0.001827	0.004243	0.000078	0.000055	0.000024	0.000806
329	WB	-2.847E-06	-4.946E-07	-5.755E-06	0.000034	-1.296E-06	1.124E-07
330	DEAD	0.00002	0.000013	-0.001289	0.000535	0.000108	5.009E-06
330	LIVE	-9.857E-06	-9.262E-06	-0.001698	0.000764	0.000163	4.345E-06
330	SX	0.00475	0.001633	0.000029	0.000031	2.803E-06	0.000213
330	SY	0.00175	0.007917	0.000044	0.000023	3.305E-06	0.000819
330	WB	-2.615E-06	-1.154E-06	-0.000062	0.000028	6.830E-06	1.145E-07
331	DEAD	7.699E-06	0.000012	-0.000154	0.000423	-0.000098	4.854E-06
331	LIVE	-0.00002	-9.468E-06	-0.000162	0.000528	-0.000125	4.211E-06
331	SX	0.004713	0.001634	0.000107	0.000104	0.000041	0.000214
331	SY	0.001839	0.007917	0.000038	0.000043	0.000014	0.000819
331	WB	-2.895E-06	-1.160E-06	-6.408E-06	0.000019	-5.126E-06	1.112E-07
332	DEAD	0.00002	0.000017	-0.001318	0.000554	-0.000056	4.414E-06
332	LIVE	-9.801E-06	-5.620E-06	-0.001753	0.000792	-0.000064	3.789E-06
332	SX	0.004749	0.001617	5.419E-06	8.966E-06	0.000014	0.000214
332	SY	0.00175	0.00728	0.000027	0.000013	0.000011	0.000812
332	WB	-2.615E-06	-1.057E-06	-0.000065	0.00003	-1.839E-06	1.024E-07
333	DEAD	8.007E-06	0.000017	-0.000087	0.000497	-7.572E-07	4.645E-06
333	LIVE	-0.00002	-5.771E-06	-0.000078	0.000632	3.874E-07	4.053E-06
333	SX	0.004712	0.001618	0.000026	0.000048	0.000208	0.000214
333	SY	0.001838	0.00728	0.000011	0.000019	0.000078	0.000808
333	WB	-2.883E-06	-1.061E-06	-2.932E-06	0.000023	-6.798E-08	1.109E-07
334	DEAD	-0.000014	-0.000058	-0.000268	0.000255	0.000058	0.000011
334	LIVE	-0.000048	-0.000103	-0.000294	0.000307	0.00007	0.00001
334	SX	0.006778	0.002498	0.000032	0.000035	0.000053	0.000307
334	SY	0.00258	0.012517	0.000035	0.000027	0.000026	0.001072
334	WB	-4.198E-06	-5.150E-06	-0.000012	9.497E-06	2.717E-06	2.551E-07
335	DEAD	-0.000014	-0.000046	-0.000268	0.000359	-0.000057	0.000011
335	LIVE	-0.000048	-0.000092	-0.00029	0.000439	-0.000074	0.00001
335	SX	0.006777	0.00246	0.000053	0.000033	0.000051	0.000307
335	SY	0.00258	0.011526	0.00002	0.000011	0.000025	0.001073
335	WB	-4.193E-06	-4.870E-06	-0.000012	0.000014	-3.207E-06	2.565E-07
336	DEAD	-0.000013	-0.00002	-0.000164	0.000437	0.000017	0.000011
336	LIVE	-0.000047	-0.000068	-0.000161	0.000563	0.000024	9.816E-06
336	SX	0.006777	0.002532	0.000012	0.000022	2.646E-06	0.000307
336	SY	0.00258	0.009467	4.748E-06	7.855E-06	8.560E-07	0.001074
336	WB	-4.162E-06	-4.264E-06	-6.053E-06	0.00002	9.647E-07	2.377E-07

Table 28: Joint Displacements

Joint	OutputCase	U1	U2	U3	R1	R2	R3
		m	m	m	Radians	Radians	Radians
337	DEAD	-0.000013	-9.024E-06	-0.000154	0.000594	-0.000028	0.000011
337	LIVE	-0.000047	-0.000058	-0.000148	0.000833	-0.000039	9.486E-06
337	SX	0.006777	0.002631	0.000016	0.000014	0.000051	0.000307
337	SY	0.00258	0.008623	5.806E-06	7.940E-06	0.000018	0.001072
337	WB	-4.139E-06	-4.014E-06	-5.584E-06	0.000033	-1.563E-06	2.268E-07
338	DEAD	0.000013	8.567E-06	-0.00243	0.001041	0.000125	0.00001
338	LIVE	-0.000023	-0.000042	-0.003662	0.00164	0.000244	9.269E-06
338	SX	0.006803	0.002853	0.000061	0.000048	7.351E-06	0.000306
338	SY	0.002443	0.007482	0.000021	0.000017	5.380E-06	0.001074
338	WB	-3.568E-06	-3.649E-06	-0.000154	0.000069	0.000013	2.146E-07
339	DEAD	-0.000013	8.553E-06	-0.000169	0.000778	0.000043	0.00001
339	LIVE	-0.000046	-0.000042	-0.000148	0.001177	0.000044	9.314E-06
339	SX	0.006779	0.002852	0.000079	0.000073	0.000021	0.000306
339	SY	0.002581	0.007482	0.000029	0.000025	0.000012	0.001074
339	WB	-4.112E-06	-3.654E-06	-5.543E-06	0.00005	1.703E-06	2.159E-07
341	DEAD	-0.000013	-1.339E-06	-0.000126	0.000703	0.000011	0.000011
341	LIVE	-0.000047	-0.000051	-0.000106	0.001014	5.928E-06	9.678E-06
341	SX	0.006777	0.002719	0.00005	0.000049	0.000133	0.000306
341	SY	0.00258	0.008096	0.000018	0.000019	0.000047	0.001077
341	WB	-4.126E-06	-3.855E-06	-3.906E-06	0.000042	2.507E-07	2.213E-07
342	DEAD	0.000013	0.000018	-0.002274	0.000962	-0.000303	0.000011
342	LIVE	-0.000023	-0.000033	-0.003498	0.001557	-0.000438	9.486E-06
342	SX	0.006803	0.003001	0.000022	0.000017	0.000016	0.000306
342	SY	0.002444	0.006977	0.000024	0.000018	7.428E-06	0.001076
342	WB	-3.560E-06	-3.459E-06	-0.00015	0.000066	-0.000018	2.095E-07
343	DEAD	-0.000013	0.000018	-0.000204	0.000703	0.000015	0.000011
343	LIVE	-0.000046	-0.000033	-0.000187	0.001095	0.000019	9.574E-06
343	SX	0.00678	0.003001	0.000019	0.000017	0.000073	0.000306
343	SY	0.002581	0.006977	0.000019	0.000014	0.000029	0.001075
343	WB	-4.100E-06	-3.464E-06	-7.025E-06	0.000048	7.292E-07	2.144E-07
344	DEAD	0.000013	0.000028	-0.001541	0.000626	-0.000538	0.00001
344	LIVE	-0.000023	-0.000025	-0.002381	0.001049	-0.000874	9.380E-06
344	SX	0.006804	0.003166	0.000035	0.000026	0.000016	0.000306
344	SY	0.002444	0.006577	0.000029	0.000018	5.943E-06	0.001076
344	WB	-3.548E-06	-3.268E-06	-0.000103	0.000045	-0.00004	2.259E-07
345	DEAD	-0.000013	0.000028	-0.000197	0.000513	-0.000035	0.00001
345	LIVE	-0.000046	-0.000025	-0.000183	0.000788	-0.000035	9.081E-06
345	SX	0.00678	0.003166	0.000055	0.000057	0.000036	0.000306
345	SY	0.002581	0.006577	0.000035	0.00004	0.000016	0.001075
345	WB	-4.090E-06	-3.275E-06	-6.869E-06	0.000034	-1.367E-06	2.090E-07
346	DEAD	0.000014	-0.000038	-0.001236	0.000502	0.000046	0.000011
346	LIVE	-0.000023	-0.000084	-0.001568	0.000705	0.000075	0.00001
346	SX	0.006802	0.00246	3.084E-06	0.00002	5.024E-06	0.000307
346	SY	0.002442	0.010837	0.000016	0.00001	2.525E-06	0.001072
346	WB	-3.563E-06	-4.667E-06	-0.000054	0.000025	3.381E-06	2.633E-07
347	DEAD	-0.000014	-0.000038	-0.000188	0.000384	-0.000087	0.000011
347	LIVE	-0.000047	-0.000084	-0.000187	0.000459	-0.000111	9.851E-06
347	SX	0.006777	0.00246	0.000077	0.000055	0.000034	0.000307
347	SY	0.002579	0.010837	0.000027	0.000021	0.000012	0.00107
347	WB	-4.187E-06	-4.670E-06	-7.259E-06	0.000015	-4.629E-06	2.512E-07
348	DEAD	0.000014	-0.000028	-0.001188	0.000493	-0.000096	0.000011
348	LIVE	-0.000023	-0.000075	-0.001517	0.000693	-0.000113	0.00001
348	SX	0.006802	0.002489	6.928E-06	5.925E-06	6.007E-06	0.000307
348	SY	0.002442	0.010058	0.000016	7.602E-06	2.210E-06	0.001075

Table 28: Joint Displacements

Joint	OutputCase	U1	U2	U3	R1	R2	R3
		m	m	m	Radians	Radians	Radians
348	WB	-3.561E-06	-4.433E-06	-0.000053	0.000025	-3.407E-06	2.603E-07
349	DEAD	-0.000014	-0.000028	-0.000132	0.000409	7.607E-06	0.000011
349	LIVE	-0.000047	-0.000075	-0.000117	0.000498	0.000012	0.00001
349	SX	0.006776	0.002489	9.123E-07	0.000021	0.000115	0.000306
349	SY	0.002579	0.010059	1.437E-06	8.188E-06	0.000041	0.001077
349	WB	-4.176E-06	-4.440E-06	-4.314E-06	0.000017	4.038E-07	2.514E-07
352	DEAD	0.000013	-1.306E-06	-0.001867	0.000759	0.000447	0.000011
352	LIVE	-0.000023	-0.000051	-0.002709	0.001161	0.000731	9.587E-06
352	SX	0.006803	0.002719	0.00005	0.000036	4.860E-06	0.000306
352	SY	0.002443	0.008095	0.000017	0.000012	4.484E-06	0.001076
352	WB	-3.573E-06	-3.849E-06	-0.00011	0.000047	0.000033	2.174E-07
353	DEAD	3.952E-06	0.000056	-0.000871	0.000293	0.000216	0.00001
353	LIVE	-0.00003	-3.198E-08	-0.000672	0.000275	0.000135	8.366E-06
353	SX	0.00679	0.003741	0.000031	9.131E-06	0.000021	0.000306
353	SY	0.002142	0.006183	0.000021	0.00001	6.759E-06	0.001072
353	WB	-3.691E-06	-2.742E-06	1.454E-06	1.033E-06	-4.769E-06	1.470E-07
354	DEAD	3.951E-06	0.000065	-0.001007	0.000296	0.00003	0.00001
354	LIVE	-0.00003	7.517E-06	-0.000772	0.000275	0.000023	8.455E-06
354	SX	0.00679	0.003952	9.766E-06	0.000017	0.00003	0.000306
354	SY	0.002142	0.006349	0.000017	5.724E-06	0.000011	0.001073
354	WB	-3.680E-06	-2.608E-06	3.363E-06	7.787E-07	-8.324E-07	1.649E-07
355	DEAD	3.902E-06	0.000074	-0.000923	0.000191	-0.00021	0.00001
355	LIVE	-0.00003	0.000015	-0.00071	0.000181	-0.000164	8.387E-06
355	SX	0.006791	0.004171	0.000025	0.00003	0.000013	0.000306
355	SY	0.002142	0.006652	0.000013	0.000012	0.000013	0.001072
355	WB	-3.673E-06	-2.476E-06	3.040E-06	6.049E-07	8.430E-07	1.496E-07
356	DEAD	3.881E-06	0.000083	-0.000632	0.000032	-0.000388	9.811E-06
356	LIVE	-0.00003	0.000022	-0.000478	0.00004	-0.000311	8.123E-06
356	SX	0.006791	0.004396	0.000019	0.000033	0.000028	0.000306
356	SY	0.002142	0.007075	8.474E-06	0.000013	0.000027	0.001072
356	WB	-3.668E-06	-2.347E-06	1.890E-06	3.441E-07	1.377E-06	1.558E-07
357	DEAD	3.965E-06	0.000091	-0.000263	-8.518E-06	-0.000445	9.973E-06
357	LIVE	-0.00003	0.000029	-0.000181	-5.106E-06	-0.000359	8.412E-06
357	SX	0.006791	0.004608	0.000024	0.000023	0.000044	0.000306
357	SY	0.002142	0.007553	0.000034	0.000036	0.000035	0.001073
357	WB	-3.665E-06	-2.220E-06	6.849E-07	-1.454E-07	1.453E-06	1.726E-07
358	DEAD	-0.000018	0.000051	-0.000236	0.00024	0.000195	9.764E-06
358	LIVE	-0.000048	-4.466E-06	-0.00013	0.000218	0.000164	7.108E-06
358	SX	0.006802	0.003621	0.000045	6.899E-06	0.000134	0.000307
358	SY	0.002982	0.006152	0.000019	7.939E-06	0.000055	0.001069
358	WB	-4.016E-06	-2.813E-06	-1.357E-07	1.134E-06	-2.842E-08	6.425E-08
359	DEAD	3.943E-06	0.000051	-0.000727	0.00022	0.000252	0.000011
359	LIVE	-0.00003	-4.632E-06	-0.000582	0.000206	0.000118	9.099E-06
359	SX	0.006789	0.003621	0.000038	0.000013	4.638E-06	0.000306
359	SY	0.002141	0.006154	0.000021	0.000011	3.007E-06	0.001074
359	WB	-3.699E-06	-2.825E-06	-1.689E-06	3.687E-07	-8.837E-06	1.837E-07
360	DEAD	0.000016	0.000051	-0.000996	0.000226	0.000514	0.00001
360	LIVE	-0.00002	-4.635E-06	-0.000829	0.000207	0.000416	8.951E-06
360	SX	0.006813	0.003622	0.00007	0.00003	0.000018	0.000306
360	SY	0.002613	0.006154	0.000032	0.000016	7.628E-06	0.001072
360	WB	-3.465E-06	-2.832E-06	-1.831E-06	-4.037E-08	-1.865E-06	1.943E-07
361	DEAD	-0.000011	-0.000124	-0.000388	-0.000138	0.000623	7.426E-06
361	LIVE	-0.000045	-0.000163	-0.000272	-0.000109	0.000535	6.993E-06
361	SX	0.006784	0.00347	0.000027	0.000014	0.000021	0.000307

Table 28: Joint Displacements

Joint	OutputCase	U1	U2	U3	R1	R2	R3
		m	m	m	Radians	Radians	Radians
361	SY	0.00252	0.018895	0.000104	0.000069	0.000088	0.001071
361	WB	-4.171E-06	-6.684E-06	-1.383E-07	-3.345E-08	1.029E-06	2.186E-07
362	DEAD	-0.000012	-0.000089	-0.000358	-0.000125	-0.000645	0.000011
362	LIVE	-0.000046	-0.000131	-0.000282	-0.000106	-0.000536	0.00001
362	SX	0.006778	0.002769	0.000054	0.000013	0.000037	0.000307
362	SY	0.002519	0.015101	0.000068	0.000064	0.00005	0.001073
362	WB	-4.171E-06	-5.856E-06	-2.114E-06	-3.514E-07	-1.123E-07	2.302E-07
367	DEAD	0.000017	0.000047	-0.000778	0.000612	0.000522	0.00001
367	LIVE	-0.000019	-7.661E-06	-0.000652	0.000491	0.000426	8.941E-06
367	SX	0.006813	0.003538	0.000074	0.000058	0.000023	0.000306
367	SY	0.002617	0.006167	0.000034	0.000023	8.267E-06	0.001075
367	WB	-3.462E-06	-2.897E-06	-2.506E-06	-2.246E-06	-1.503E-06	1.756E-07
368	DEAD	0.000016	0.000056	-0.00127	0.000438	0.000404	0.000011
368	LIVE	-0.00002	8.973E-08	-0.001049	0.000396	0.000321	9.174E-06
368	SX	0.006814	0.003741	0.000044	4.230E-06	0.000056	0.000306
368	SY	0.002614	0.006183	0.000023	7.311E-06	0.000021	0.001073
368	WB	-3.464E-06	-2.742E-06	-6.523E-07	1.397E-06	-2.018E-06	1.933E-07
369	DEAD	0.000016	0.000065	-0.001453	0.000504	-0.000014	0.00001
369	LIVE	-0.00002	7.706E-06	-0.001191	0.000456	-0.000023	8.540E-06
369	SX	0.006814	0.003953	0.00002	0.000013	0.000066	0.000306
369	SY	0.002612	0.006349	0.000012	0.000013	0.000024	0.001073
369	WB	-3.464E-06	-2.602E-06	7.547E-07	2.135E-06	-1.030E-06	1.613E-07
370	DEAD	0.000016	0.000074	-0.001217	0.000411	-0.000417	0.00001
370	LIVE	-0.00002	0.000015	-0.000988	0.000368	-0.000355	8.605E-06
370	SX	0.006814	0.004171	0.000075	0.000017	0.000031	0.000306
370	SY	0.002609	0.006652	0.000026	9.605E-06	0.000012	0.001073
370	WB	-3.464E-06	-2.466E-06	1.077E-06	1.829E-06	7.151E-08	1.737E-07
371	DEAD	0.000015	0.000083	-0.000676	0.000226	-0.000546	0.000011
371	LIVE	-0.000021	0.000023	-0.000533	0.000199	-0.000459	8.879E-06
371	SX	0.006814	0.004397	0.00008	0.000021	0.000066	0.000306
371	SY	0.002607	0.007075	0.000029	0.000018	0.000022	0.001073
371	WB	-3.462E-06	-2.330E-06	6.163E-07	1.282E-06	5.485E-07	1.646E-07
373	DEAD	0.000016	0.000056	-0.001266	0.000429	0.00032	0.000011
373	LIVE	-0.00002	8.678E-08	-0.001046	0.00039	0.00026	9.127E-06
373	SX	0.006813	0.003741	0.000044	4.008E-06	0.000042	0.000306
373	SY	0.002609	0.006183	0.000023	7.361E-06	0.000015	0.001073
373	WB	-3.466E-06	-2.743E-06	-6.396E-07	1.457E-06	-1.465E-06	1.889E-07
374	DEAD	0.000016	0.000065	-0.001449	0.0005	-0.000061	0.00001
374	LIVE	-0.00002	7.701E-06	-0.001187	0.000453	-0.000057	8.547E-06
374	SX	0.006814	0.003953	0.000019	0.000013	0.000069	0.000306
374	SY	0.002606	0.006349	0.000012	0.000013	0.000024	0.001073
374	WB	-3.467E-06	-2.602E-06	7.744E-07	2.159E-06	-7.514E-07	1.619E-07
375	DEAD	0.000016	0.000074	-0.001213	0.0004	-0.000516	9.947E-06
375	LIVE	-0.00002	0.000015	-0.000984	0.00036	-0.000432	8.425E-06
375	SX	0.006814	0.004172	0.000075	0.000019	0.000053	0.000306
375	SY	0.002604	0.006653	0.000026	9.702E-06	0.00002	0.001073
375	WB	-3.466E-06	-2.467E-06	1.094E-06	1.845E-06	2.243E-07	1.718E-07
380	DEAD	0.000014	-0.000058	-0.000551	-0.000084	0.000082	0.000011
380	LIVE	-0.000022	-0.000103	-0.000574	-0.000176	0.000094	9.645E-06
380	SX	0.006802	0.002498	0.000016	0.000032	0.000044	0.000307
380	SY	0.002441	0.012517	0.000026	0.000022	0.00003	0.001073
380	WB	-3.586E-06	-5.135E-06	-0.000014	-0.000012	2.489E-06	2.336E-07
381	DEAD	0.000014	-0.000046	-0.000562	-0.000241	-0.000098	0.000011
381	LIVE	-0.000023	-0.000092	-0.000597	-0.000364	-0.000104	9.658E-06

Table 28: Joint Displacements

Joint	OutputCase	U1	U2	U3	R1	R2	R3
		m	m	m	Radians	Radians	Radians
381	SX	0.006802	0.00246	0.000046	0.000037	0.000031	0.000306
381	SY	0.002441	0.011526	0.000015	0.000012	0.000024	0.001073
381	WB	-3.568E-06	-4.867E-06	-0.000016	-0.000018	-2.087E-06	2.257E-07
382	DEAD	0.000013	-0.00002	-0.000483	-0.000297	0.000028	0.000011
382	LIVE	-0.000023	-0.000068	-0.000533	-0.000434	0.000045	9.475E-06
382	SX	0.006802	0.002532	0.000013	0.000026	0.000027	0.000306
382	SY	0.002442	0.009466	0.000012	8.926E-06	8.864E-06	0.001073
382	WB	-3.564E-06	-4.247E-06	-0.000016	-0.000019	1.837E-06	2.285E-07
383	DEAD	0.000013	-9.010E-06	-0.000512	-0.000498	-0.000033	0.00001
383	LIVE	-0.000023	-0.000057	-0.000603	-0.00076	-0.000014	9.198E-06
383	SX	0.006803	0.002631	0.000033	0.000025	9.534E-06	0.000307
383	SY	0.002443	0.008623	0.000018	0.000012	4.151E-06	0.001071
383	WB	-3.574E-06	-4.005E-06	-0.00002	-0.000034	1.030E-06	2.150E-07
384	DEAD	-7.416E-06	0.000091	-0.000227	0.000058	-0.000369	0.00001
384	LIVE	-0.00004	0.000029	-0.000153	0.000045	-0.000284	8.477E-06
384	SX	0.006787	0.004608	0.000031	0.000024	0.00006	0.000306
384	SY	0.002316	0.007553	0.000046	0.000037	0.000053	0.001072
384	WB	-3.906E-06	-2.247E-06	9.801E-08	-4.121E-07	1.583E-06	1.524E-07
385	DEAD	-7.417E-06	0.000083	-0.000524	0.000133	-0.000307	0.00001
385	LIVE	-0.00004	0.000022	-0.000381	0.000106	-0.000236	8.176E-06
385	SX	0.006786	0.004396	0.000026	0.000036	0.000028	0.000306
385	SY	0.002316	0.007075	0.000013	0.000015	0.000028	0.001072
385	WB	-3.908E-06	-2.361E-06	1.380E-06	-9.143E-07	1.364E-06	1.436E-07
386	DEAD	0.000014	-0.000076	-0.000234	0.000155	0.000082	0.00001
386	LIVE	-0.000023	-0.000119	-0.000208	0.000095	0.000109	8.956E-06
386	SX	0.006802	0.002622	6.450E-06	0.000023	0.000155	0.000306
386	SY	0.002442	0.013959	0.00002	0.000104	0.00005	0.001073
386	WB	-3.591E-06	-5.541E-06	-4.319E-06	-3.060E-06	3.592E-06	2.088E-07
387	DEAD	0.000013	0.000037	-0.000365	5.283E-06	0.000107	0.000011
387	LIVE	-0.000022	-0.000016	-0.000348	-0.000102	0.000031	9.690E-06
387	SX	0.006805	0.003352	6.589E-06	0.000039	0.000155	0.000306
387	SY	0.002445	0.006294	5.011E-06	0.00007	0.000055	0.001073
387	WB	-3.536E-06	-3.057E-06	-6.947E-06	-0.000011	-5.360E-06	2.029E-07
388	DEAD	-0.000013	0.00005	-0.000377	0.000233	0.000199	0.000011
388	LIVE	-0.000046	-4.555E-06	-0.000258	0.000212	0.000149	9.299E-06
388	SX	0.006781	0.003621	0.000042	6.243E-06	0.000066	0.000306
388	SY	0.002582	0.006153	0.00002	7.341E-06	0.000028	0.001074
388	WB	-4.076E-06	-2.815E-06	-8.476E-07	8.963E-07	-1.883E-06	2.082E-07
389	DEAD	0.000013	0.000051	-0.000928	0.000227	0.000448	0.00001
389	LIVE	-0.000022	-4.631E-06	-0.000768	0.000208	0.000341	9.165E-06
389	SX	0.006805	0.003622	0.00006	0.000029	0.000015	0.000306
389	SY	0.002441	0.006154	0.000028	0.000015	5.654E-06	0.001073
389	WB	-3.539E-06	-2.829E-06	-1.895E-06	4.154E-08	-3.635E-06	2.012E-07
390	DEAD	0.000022	0.000049	-0.00065	0.000724	0.000512	4.174E-06
390	LIVE	-7.244E-06	0.000022	-0.000562	0.000594	0.00044	3.845E-06
390	SX	0.00475	0.002187	0.000215	0.00011	0.000105	0.000216
390	SY	0.001887	0.003803	0.000079	0.000044	0.000033	0.000813
390	WB	-2.559E-06	-3.234E-07	-2.003E-06	-1.707E-06	-6.566E-07	1.237E-07
391	DEAD	0.000023	0.000053	-0.001136	0.00074	0.000427	4.763E-06
391	LIVE	-6.662E-06	0.000025	-0.000976	0.000658	0.000348	4.111E-06
391	SX	0.004748	0.002326	0.000198	0.000133	0.000098	0.000215
391	SY	0.001885	0.003785	0.000064	0.000048	0.000062	0.000801
391	WB	-2.559E-06	-2.262E-07	-1.093E-06	9.060E-07	-1.445E-06	9.850E-08
392	DEAD	0.000024	0.000057	-0.001359	0.00069	0.000039	4.076E-06

Table 28: Joint Displacements

Joint	OutputCase	U1	U2	U3	R1	R2	R3
		m	m	m	Radians	Radians	Radians
392	LIVE	-6.260E-06	0.000029	-0.001163	0.000626	0.000019	3.545E-06
392	SX	0.004748	0.002475	0.000052	0.000142	0.000168	0.000217
392	SY	0.001884	0.003906	0.000034	0.000054	0.000067	0.000803
392	WB	-2.557E-06	-1.382E-07	-4.617E-07	8.380E-07	-6.087E-07	9.678E-08
393	DEAD	0.000024	0.000061	-0.001158	0.000552	-0.000373	4.960E-06
393	LIVE	-5.800E-06	0.000033	-0.000985	0.000504	-0.000336	4.352E-06
393	SX	0.004747	0.002629	0.000128	0.000092	0.000112	0.000216
393	SY	0.001882	0.004151	0.000071	0.000039	0.000037	0.000802
393	WB	-2.556E-06	-4.716E-08	-1.853E-07	5.542E-07	-2.298E-07	1.042E-07
394	DEAD	0.000025	0.000065	-0.000622	0.000344	-0.000491	3.835E-06
394	LIVE	-5.261E-06	0.000036	-0.000516	0.00031	-0.000441	3.339E-06
394	SX	0.004746	0.002789	0.000194	0.000047	0.000152	0.000216
394	SY	0.00188	0.004499	0.000083	0.000018	0.000068	0.000803
394	WB	-2.555E-06	4.409E-08	-7.427E-08	2.729E-07	-1.594E-07	9.847E-08
395	DEAD	0.00002	8.916E-06	-0.000503	-0.000288	-0.000065	4.703E-06
395	LIVE	-9.825E-06	-0.000013	-0.000561	-0.000424	-0.000061	4.178E-06
395	SX	0.004751	0.001665	0.000072	0.000099	0.000062	0.000215
395	SY	0.001749	0.008476	0.000035	0.000032	0.000029	0.000807
395	WB	-2.613E-06	-1.243E-06	-0.000016	-0.000019	-7.989E-07	1.179E-07
396	DEAD	0.00002	0.00002	-0.000459	-0.00049	0.000051	4.823E-06
396	LIVE	-9.771E-06	-2.892E-06	-0.00054	-0.000698	0.000071	4.233E-06
396	SX	0.00475	0.001621	0.000025	0.000061	0.000076	0.000214
396	SY	0.001749	0.006792	9.305E-06	0.000027	0.000025	0.000811
396	WB	-2.614E-06	-9.848E-07	-0.000017	-0.000029	2.660E-06	1.148E-07
397	DEAD	0.000019	3.733E-06	-0.000472	-0.000106	0.000104	4.946E-06
397	LIVE	-0.000011	-0.000017	-0.000514	-0.000196	0.000123	4.384E-06
397	SX	0.004755	0.001733	0.000051	0.000044	0.00009	0.000215
397	SY	0.00175	0.009267	0.000023	0.000017	0.000047	0.00081
397	WB	-2.623E-06	-1.370E-06	-0.000014	-0.000012	3.622E-06	1.217E-07
398	DEAD	0.00002	0.000029	-0.002037	0.000811	0.000504	4.662E-06
398	LIVE	-9.038E-06	4.767E-06	-0.002836	0.001155	0.00076	3.953E-06
398	SX	0.004742	0.001693	0.000303	0.00014	0.000125	0.000212
398	SY	0.001749	0.00563	0.000099	0.000046	0.000044	0.000818
398	WB	-2.598E-06	-7.776E-07	-0.000112	0.000046	0.000032	1.074E-07
399	DEAD	0.00002	0.000025	-0.00049	-0.000637	0.000038	4.898E-06
399	LIVE	-8.990E-06	1.741E-06	-0.0006	-0.000915	0.000076	4.482E-06
399	SX	0.004743	0.001655	0.000095	4.191E-06	7.776E-06	0.000216
399	SY	0.001749	0.006086	0.000033	0.00002	4.906E-06	0.000805
399	WB	-2.595E-06	-8.592E-07	-0.000021	-0.000038	4.257E-06	1.266E-07
400	DEAD	-5.051E-06	0.000053	-0.000302	-7.293E-06	0.000158	4.474E-06
400	LIVE	-0.000031	0.000025	-0.000193	-0.000034	0.000137	3.931E-06
400	SX	0.004673	0.002323	0.000295	0.000036	0.000071	0.00022
400	SY	0.004038	0.00378	0.000149	0.000022	0.000027	0.000794
400	WB	-3.145E-06	-2.259E-07	6.854E-07	-1.065E-07	-3.074E-07	9.510E-08
401	DEAD	-4.704E-06	0.000057	-0.000414	0.000018	0.000044	4.554E-06
401	LIVE	-0.000031	0.000029	-0.000295	-0.000026	0.000048	3.896E-06
401	SX	0.004674	0.002474	0.000195	0.000101	0.000192	0.000218
401	SY	0.004036	0.003905	0.000085	0.000066	0.000144	0.000799
401	WB	-3.147E-06	-1.394E-07	6.964E-07	-2.180E-07	1.514E-07	9.338E-08
402	DEAD	-4.390E-06	0.000061	-0.00038	0.000058	-0.000112	4.877E-06
402	LIVE	-0.000031	0.000032	-0.000279	4.791E-06	-0.00008	4.274E-06
402	SX	0.004675	0.002631	0.00007	0.000175	0.000203	0.000218
402	SY	0.004033	0.004152	0.000141	0.000133	0.000119	0.000797
402	WB	-3.148E-06	-5.085E-08	4.275E-07	-2.775E-07	3.134E-07	9.840E-08

Table 28: Joint Displacements

Joint	OutputCase	U1	U2	U3	R1	R2	R3
		m	m	m	Radians	Radians	Radians
403	DEAD	-7.421E-06	0.000074	-0.000732	0.000148	-0.000128	0.00001
403	LIVE	-0.00004	0.000015	-0.00054	0.000118	-0.000093	8.218E-06
403	SX	0.006786	0.004171	0.00002	0.000015	0.000029	0.000306
403	SY	0.002316	0.006652	0.000011	7.065E-06	0.000011	0.001072
403	WB	-3.912E-06	-2.485E-06	2.345E-06	-1.417E-06	6.245E-07	1.446E-07
404	DEAD	-7.428E-06	0.000065	-0.000748	0.000178	0.000083	0.00001
404	LIVE	-0.00004	7.396E-06	-0.000546	0.000142	0.000067	8.290E-06
404	SX	0.006786	0.003952	0.00002	0.000017	0.000039	0.000306
404	SY	0.002315	0.006348	0.000015	8.289E-06	0.000016	0.001072
404	WB	-3.916E-06	-2.611E-06	2.374E-06	-1.707E-06	-8.440E-07	1.493E-07
405	DEAD	0.000019	-3.176E-06	-0.000144	0.000136	0.000085	5.030E-06
405	LIVE	-0.000011	-0.000023	-0.000133	0.00008	0.000113	4.400E-06
405	SX	0.004754	0.001875	3.300E-06	0.000037	0.00032	0.000215
405	SY	0.001746	0.010411	0.000015	0.000159	0.000104	0.000808
405	WB	-2.623E-06	-1.559E-06	-3.281E-06	-3.105E-06	4.595E-06	1.178E-07
406	DEAD	-7.439E-06	0.000056	-0.000601	0.000222	0.000195	0.00001
406	LIVE	-0.00004	-9.615E-08	-0.000435	0.000185	0.000136	8.016E-06
406	SX	0.006785	0.003741	0.000043	0.000028	7.294E-06	0.000306
406	SY	0.002315	0.006182	0.000023	0.000014	2.671E-06	0.001072
406	WB	-3.920E-06	-2.741E-06	7.237E-07	-9.727E-07	-2.886E-06	1.232E-07
407	DEAD	0.000021	0.000045	-0.000207	0.000081	-0.000014	3.587E-06
407	LIVE	-9.034E-06	0.000019	-0.000204	-0.000016	-0.000083	3.197E-06
407	SX	0.00474	0.002064	0.000057	0.000199	0.000365	0.000215
407	SY	0.001748	0.003955	0.000023	0.000103	0.000134	0.000807
407	WB	-2.605E-06	-4.191E-07	-4.947E-06	-8.700E-06	-6.892E-06	1.101E-07
408	DEAD	0.00001	0.000049	-0.000112	-0.000019	0.000064	4.062E-06
408	LIVE	-0.000018	0.000022	-0.000039	-7.756E-06	0.00003	3.498E-06
408	SX	0.00468	0.002191	2.342E-06	0.000018	0.000771	0.000219
408	SY	0.001822	0.003785	4.438E-06	0.000024	0.000297	0.000789
408	WB	-2.833E-06	-3.081E-07	-9.796E-08	7.235E-08	-2.330E-06	8.195E-08
409	DEAD	0.000019	0.000053	-0.000631	0.000592	0.000414	4.335E-06
409	LIVE	-0.00001	0.000025	-0.000512	0.000556	0.000344	3.886E-06
409	SX	0.004722	0.002325	0.000289	0.000108	0.000044	0.000223
409	SY	0.001584	0.003782	0.000094	0.000057	0.000039	0.000807
409	WB	-2.651E-06	-2.291E-07	1.443E-07	1.719E-06	-5.527E-07	1.017E-07
410	DEAD	0.000018	0.000046	-0.000223	-0.000062	-0.000328	4.068E-06
410	LIVE	-0.000011	0.000019	-0.000275	-0.000156	-0.000519	3.670E-06
410	SX	0.00472	0.00208	0.000187	0.000185	0.000248	0.000215
410	SY	0.001541	0.003923	0.000062	0.000074	0.000078	0.000812
410	WB	-2.664E-06	-3.987E-07	-0.000011	-0.00001	-0.000023	1.179E-07
411	DEAD	6.369E-06	-8.475E-06	-0.000334	-0.000123	-0.000656	5.196E-06
411	LIVE	-0.000022	-0.000028	-0.000271	-0.000105	-0.000546	4.710E-06
411	SX	0.004717	0.002014	0.000056	0.00004	0.000045	0.000214
411	SY	0.00184	0.011309	0.000038	0.000221	0.000072	0.00081
411	WB	-2.952E-06	-1.707E-06	-2.688E-06	-4.776E-07	9.675E-07	1.353E-07
412	DEAD	-0.000013	-0.000089	-0.000373	-0.000116	-0.00066	0.00001
412	LIVE	-0.000047	-0.000131	-0.000295	-0.000098	-0.00055	9.435E-06
412	SX	0.006778	0.002769	0.000053	0.000016	0.000034	0.000307
412	SY	0.00258	0.015101	0.00006	0.000074	0.000042	0.001073
412	WB	-4.195E-06	-5.856E-06	-2.178E-06	-2.559E-07	-2.583E-08	2.386E-07
413	DEAD	-7.446E-06	0.000051	-0.000494	0.000222	0.000203	0.000011
413	LIVE	-0.00004	-4.582E-06	-0.000363	0.000204	0.000136	0.00001
413	SX	0.006785	0.003621	0.000039	4.744E-06	6.293E-06	0.000306
413	SY	0.002315	0.006153	0.00002	7.241E-06	5.527E-06	0.001075

Table 28: Joint Displacements

Joint	OutputCase	U1	U2	U3	R1	R2	R3
		m	m	m	Radians	Radians	Radians
413	WB	-3.923E-06	-2.818E-06	-1.157E-06	6.205E-07	-3.517E-06	2.714E-07
417	DEAD	0.000058	-0.00013	-0.000488	-0.000241	0.000963	0.000012
417	LIVE	0.000018	-0.000172	-0.000363	-0.000192	0.000826	0.000011
417	SX	0.007033	0.003469	0.000032	4.518E-06	0.000034	0.000307
417	SY	0.005971	0.018913	0.000185	0.000026	0.000178	0.001074
417	WB	-2.533E-06	-7.136E-06	-6.782E-07	-4.327E-07	1.065E-06	3.091E-07
418	DEAD	0.000058	-0.00012	-0.001352	-0.000597	0.000777	0.000011
418	LIVE	0.000018	-0.000162	-0.001105	-0.000507	0.000668	0.000011
418	SX	0.007033	0.003272	0.000019	0.000044	0.000021	0.000307
418	SY	0.005971	0.017966	0.000032	0.000037	0.000116	0.001074
418	WB	-2.536E-06	-6.823E-06	-1.599E-06	-1.590E-07	6.715E-07	3.275E-07
419	DEAD	0.000058	-0.00011	-0.001879	-0.000765	0.000349	0.000011
419	LIVE	0.000018	-0.000152	-0.001557	-0.000654	0.000298	0.000011
419	SX	0.007033	0.003097	0.000014	0.000029	0.000014	0.000307
419	SY	0.005971	0.017061	0.000026	0.000024	0.000015	0.001074
419	WB	-2.540E-06	-6.522E-06	-1.885E-06	-1.021E-07	4.914E-08	3.196E-07
420	DEAD	0.000057	-0.000099	-0.001971	-0.000779	-0.000128	0.000011
420	LIVE	0.000018	-0.000142	-0.001634	-0.000664	-0.000114	0.000011
420	SX	0.007033	0.002937	5.526E-06	0.000013	0.000018	0.000307
420	SY	0.005971	0.016163	9.371E-06	8.663E-06	0.000045	0.001074
420	WB	-2.544E-06	-6.225E-06	-1.739E-06	2.142E-08	-2.811E-07	3.165E-07
421	DEAD	0.000057	-0.000089	-0.001674	-0.000689	-0.000458	0.000011
421	LIVE	0.000018	-0.000132	-0.001375	-0.000582	-0.000396	0.000011
421	SX	0.007033	0.002795	0.000016	0.000046	0.000012	0.000307
421	SY	0.005971	0.015274	0.000052	0.00003	0.000067	0.001074
421	WB	-2.549E-06	-5.940E-06	-1.415E-06	2.216E-07	-4.139E-07	3.079E-07
422	DEAD	0.000057	-0.000078	-0.001208	-0.000558	-0.000443	0.000012
422	LIVE	0.000018	-0.000121	-0.000975	-0.00046	-0.00038	0.000011
422	SX	0.007033	0.002674	0.000022	0.000037	0.000024	0.000307
422	SY	0.005971	0.014394	0.000111	0.000026	0.000049	0.001074
422	WB	-2.554E-06	-5.658E-06	-1.018E-06	4.385E-07	-4.170E-07	3.067E-07
423	DEAD	0.000057	-0.000073	-0.001024	-0.000517	-0.000231	0.000011
423	LIVE	0.000018	-0.000116	-0.000817	-0.000421	-0.000199	0.00001
423	SX	0.007033	0.002621	0.000029	3.296E-06	0.000017	0.000307
423	SY	0.005971	0.013945	0.00013	9.017E-06	0.000013	0.001074
423	WB	-2.557E-06	-5.514E-06	-8.222E-07	4.124E-07	-2.327E-07	2.891E-07
424	DEAD	0.000057	-0.000068	-0.000992	-0.000472	-0.000023	0.00001
424	LIVE	0.000017	-0.000112	-0.000788	-0.000385	-0.000022	9.727E-06
424	SX	0.007033	0.002578	0.000028	0.000022	0.00001	0.000307
424	SY	0.005971	0.013527	0.000106	0.000038	0.000053	0.001074
424	WB	-2.561E-06	-5.396E-06	-8.017E-07	6.302E-07	-6.617E-08	2.732E-07
425	DEAD	0.000057	-0.000059	-0.001066	-0.000476	0.000077	0.000011
425	LIVE	0.000017	-0.000103	-0.00085	-0.000396	0.000067	0.00001
425	SX	0.007033	0.002508	0.000015	0.000022	0.000017	0.000307
425	SY	0.005971	0.012675	0.000056	0.000034	0.000038	0.001074
425	WB	-2.569E-06	-5.155E-06	-7.509E-07	6.718E-07	-1.073E-07	2.698E-07
426	DEAD	0.000057	-0.000049	-0.001089	-0.000492	-0.000057	0.000011
426	LIVE	0.000017	-0.000094	-0.000872	-0.000413	-0.000045	0.00001
426	SX	0.007033	0.002467	0.000013	0.000015	0.00001	0.000307
426	SY	0.005971	0.01184	0.000048	0.000017	0.000018	0.001074
426	WB	-2.577E-06	-4.914E-06	-5.816E-07	5.992E-07	-2.983E-07	2.666E-07
427	DEAD	0.000057	-0.000039	-0.000968	-0.000477	-0.000165	0.000011
427	LIVE	0.000017	-0.000085	-0.000773	-0.000399	-0.000136	0.000011
427	SX	0.007033	0.002457	0.000021	0.000031	0.000019	0.000307

Table 28: Joint Displacements

Joint	OutputCase	U1	U2	U3	R1	R2	R3
		m	m	m	Radians	Radians	Radians
427	SY	0.00597	0.011027	0.000083	0.000024	0.000049	0.001074
427	WB	-2.586E-06	-4.675E-06	-2.081E-07	5.069E-07	-5.209E-07	2.619E-07
428	DEAD	0.000057	-0.000031	-0.000858	-0.000471	-0.000067	0.000011
428	LIVE	0.000017	-0.000077	-0.000683	-0.000392	-0.000055	0.00001
428	SX	0.007033	0.002469	0.000031	3.415E-06	0.000014	0.000306
428	SY	0.00597	0.010442	0.000114	0.000017	0.000011	0.001074
428	WB	-2.592E-06	-4.500E-06	1.651E-07	2.953E-07	-2.631E-07	2.546E-07
429	DEAD	0.000057	-0.000021	-0.000907	-0.000462	0.000043	0.000011
429	LIVE	0.000017	-0.000068	-0.000726	-0.00039	0.000038	9.751E-06
429	SX	0.007033	0.002521	0.000023	0.000014	7.020E-06	0.000307
429	SY	0.00597	0.009567	0.000074	0.000023	0.000033	0.001074
429	WB	-2.602E-06	-4.249E-06	7.315E-08	7.665E-07	5.364E-08	2.418E-07
430	DEAD	0.000057	-0.000011	-0.000902	-0.00046	-0.000055	0.000011
430	LIVE	0.000017	-0.000059	-0.000722	-0.000388	-0.000046	9.989E-06
430	SX	0.007033	0.002597	0.000026	0.000016	0.000016	0.000306
430	SY	0.00597	0.00885	0.00007	0.000018	0.000026	0.001074
430	WB	-2.611E-06	-4.033E-06	1.789E-07	8.575E-07	-2.749E-07	2.374E-07
431	DEAD	0.000057	1.081E-06	-0.000836	-0.000461	0.000042	0.000011
431	LIVE	0.000016	-0.000048	-0.000666	-0.000384	0.000035	9.566E-06
431	SX	0.007033	0.002717	0.000048	6.003E-06	9.476E-06	0.000306
431	SY	0.00597	0.008088	0.000103	0.000016	0.000012	0.001074
431	WB	-2.622E-06	-3.788E-06	4.885E-07	5.907E-07	2.840E-08	2.246E-07
432	DEAD	0.000057	0.00001	-0.00097	-0.00047	0.000132	0.00001
432	LIVE	0.000016	-0.00004	-0.000778	-0.000395	0.00011	9.220E-06
432	SX	0.007033	0.002851	0.000037	0.000025	0.000016	0.000306
432	SY	0.00597	0.007476	0.000064	0.00003	0.00004	0.001074
432	WB	-2.630E-06	-3.588E-06	1.797E-07	9.398E-07	2.648E-07	2.136E-07
433	DEAD	0.000056	0.00002	-0.001039	-0.000473	4.766E-06	0.000011
433	LIVE	0.000016	-0.000031	-0.000835	-0.000395	2.272E-06	9.406E-06
433	SX	0.007033	0.003	0.000026	8.824E-06	0.00001	0.000306
433	SY	0.00597	0.006973	0.000047	0.000019	9.926E-06	0.001074
433	WB	-2.639E-06	-3.400E-06	1.026E-07	1.253E-06	-6.291E-08	2.088E-07
434	DEAD	0.000056	0.00003	-0.000993	-0.000467	-0.000043	0.000011
434	LIVE	0.000016	-0.000023	-0.000795	-0.000384	-0.000034	9.562E-06
434	SX	0.007033	0.003166	0.000039	0.000034	0.000026	0.000306
434	SY	0.00597	0.006575	0.000075	0.000032	0.000046	0.001074
434	WB	-2.646E-06	-3.216E-06	2.458E-07	1.565E-06	-1.280E-07	2.033E-07
435	DEAD	0.000056	0.00004	-0.001018	-0.000525	0.000247	0.00001
435	LIVE	0.000016	-0.000014	-0.000821	-0.00043	0.000217	9.066E-06
435	SX	0.007033	0.003338	0.000064	3.824E-06	0.000013	0.000306
435	SY	0.00597	0.006308	0.000113	8.669E-06	0.000014	0.001073
435	WB	-2.653E-06	-3.041E-06	2.592E-07	1.522E-06	2.371E-07	1.925E-07
436	DEAD	0.000056	0.000048	-0.001456	-0.000633	0.00052	9.650E-06
436	LIVE	0.000016	-6.868E-06	-0.001201	-0.000536	0.000452	8.215E-06
436	SX	0.007033	0.003538	0.000049	0.000045	0.000029	0.000306
436	SY	0.00597	0.006167	0.000072	0.00004	0.000057	0.001074
436	WB	-2.659E-06	-2.891E-06	-2.226E-07	1.138E-06	6.791E-07	1.711E-07
437	DEAD	0.000056	0.000057	-0.001888	-0.000744	0.000345	9.872E-06
437	LIVE	0.000016	3.872E-07	-0.001578	-0.000642	0.000303	8.390E-06
437	SX	0.007033	0.003741	0.000017	0.000035	0.000037	0.000306
437	SY	0.00597	0.006184	0.000026	0.000027	0.000043	0.001074
437	WB	-2.664E-06	-2.746E-06	-9.088E-07	6.168E-07	7.397E-07	1.711E-07
438	DEAD	0.000056	0.000066	-0.002037	-0.000794	-0.000056	0.00001
438	LIVE	0.000016	7.878E-06	-0.00171	-0.000689	-0.000047	8.541E-06

Table 28: Joint Displacements

Joint	OutputCase	U1	U2	U3	R1	R2	R3
		m	m	m	Radians	Radians	Radians
438	SX	0.007033	0.003953	0.000019	6.885E-06	0.000027	0.000306
438	SY	0.00597	0.00635	9.307E-06	0.000012	0.00002	0.001073
438	WB	-2.668E-06	-2.599E-06	-1.497E-06	2.493E-07	4.805E-07	1.720E-07
439	DEAD	0.000056	0.000075	-0.001776	-0.000737	-0.000516	0.00001
439	LIVE	0.000015	0.000015	-0.001484	-0.000638	-0.000449	8.579E-06
439	SX	0.007033	0.004172	0.000032	0.000036	0.000019	0.000306
439	SY	0.00597	0.006653	0.000017	0.000037	0.000031	0.001073
439	WB	-2.672E-06	-2.451E-06	-1.739E-06	1.144E-07	2.773E-08	1.732E-07
440	DEAD	0.000056	0.000084	-0.001125	-0.000526	-0.000877	0.00001
440	LIVE	0.000015	0.000023	-0.000919	-0.000447	-0.00076	8.739E-06
440	SX	0.007032	0.004397	0.000036	0.000037	0.000073	0.000306
440	SY	0.00597	0.007076	0.000058	0.000039	0.000102	0.001073
440	WB	-2.675E-06	-2.298E-06	-1.549E-06	9.663E-08	-4.114E-07	1.766E-07
442	DEAD	0.00003	-0.000131	-0.000505	0.000248	0.000933	0.000011
442	LIVE	-7.709E-06	-0.000173	-0.000393	0.000201	0.000785	0.000011
442	SX	0.006873	0.003469	0.000047	5.991E-06	0.000058	0.000307
442	SY	0.003589	0.018913	0.000181	0.000018	0.00013	0.001074
442	WB	-3.215E-06	-7.159E-06	-2.866E-06	5.841E-07	2.176E-07	3.189E-07
443	DEAD	0.00003	-0.00012	-0.001342	0.00061	0.000754	0.000012
443	LIVE	-7.712E-06	-0.000162	-0.001098	0.000522	0.000638	0.000011
443	SX	0.006873	0.003272	0.000015	0.000046	0.000035	0.000307
443	SY	0.003589	0.017966	0.00007	0.000016	0.000082	0.001074
443	WB	-3.215E-06	-6.818E-06	-3.105E-06	-2.286E-07	4.065E-07	3.375E-07
444	DEAD	0.00003	-0.000109	-0.001852	0.000781	0.000334	0.000011
444	LIVE	-7.727E-06	-0.000151	-0.001533	0.000669	0.000285	0.000011
444	SX	0.006873	0.003097	0.000022	0.000035	3.928E-06	0.000307
444	SY	0.003589	0.017061	0.000035	0.000029	0.000013	0.001074
444	WB	-3.215E-06	-6.502E-06	-3.556E-06	-1.414E-06	3.275E-07	3.258E-07
445	DEAD	0.00003	-0.000099	-0.001935	0.000805	-0.000136	0.000011
445	LIVE	-7.733E-06	-0.000142	-0.001603	0.000684	-0.000118	0.000011
445	SX	0.006873	0.002937	0.00001	9.967E-06	0.000021	0.000307
445	SY	0.00359	0.016163	0.000042	0.000047	0.000018	0.001074
445	WB	-3.214E-06	-6.217E-06	-3.587E-06	-1.848E-06	-3.506E-07	3.054E-07
446	DEAD	0.00003	-0.000089	-0.001634	0.000718	-0.000457	0.000011
446	LIVE	-7.747E-06	-0.000132	-0.001343	0.000602	-0.000392	0.000011
446	SX	0.006873	0.002795	0.000015	0.000038	0.000015	0.000307
446	SY	0.00359	0.015273	0.00006	0.000059	0.000022	0.001074
446	WB	-3.214E-06	-5.931E-06	-2.937E-06	-1.757E-06	-9.588E-07	2.964E-07
447	DEAD	0.00003	-0.000079	-0.001175	0.000565	-0.000426	0.000011
447	LIVE	-7.755E-06	-0.000122	-0.000952	0.000464	-0.000358	0.00001
447	SX	0.006873	0.002674	0.000021	0.000033	4.465E-06	0.000307
447	SY	0.00359	0.014394	0.000078	0.000047	0.000012	0.001074
447	WB	-3.214E-06	-5.664E-06	-2.039E-06	-1.099E-06	-5.780E-07	2.839E-07
448	DEAD	0.00003	-0.000075	-0.001001	0.000519	-0.000196	0.000011
448	LIVE	-7.762E-06	-0.000118	-0.000807	0.000419	-0.000159	0.00001
448	SX	0.006873	0.002621	0.000019	0.000014	0.000013	0.000307
448	SY	0.00359	0.013944	0.000082	0.000059	0.000022	0.001074
448	WB	-3.214E-06	-5.532E-06	-1.886E-06	-8.440E-07	2.817E-07	2.790E-07
449	DEAD	0.00003	-0.000069	-0.00099	0.000455	0.000025	0.000011
449	LIVE	-7.769E-06	-0.000113	-0.000802	0.000362	0.000033	0.000011
449	SX	0.006873	0.002577	0.000011	0.000022	0.000015	0.000307
449	SY	0.00359	0.013527	0.00006	0.000043	0.000051	0.001073
449	WB	-3.214E-06	-5.407E-06	-2.268E-06	-1.535E-06	1.057E-06	2.793E-07
450	DEAD	0.00003	-0.000059	-0.001106	0.000425	0.000112	0.000011

Table 28: Joint Displacements

Joint	OutputCase	U1	U2	U3	R1	R2	R3
		m	m	m	Radians	Radians	Radians
450	LIVE	-7.787E-06	-0.000103	-0.000914	0.000323	0.000108	0.00001
450	SX	0.006873	0.002508	4.267E-06	0.00002	8.359E-06	0.000307
450	SY	0.00359	0.012675	0.00002	0.000034	0.000033	0.001074
450	WB	-3.213E-06	-5.157E-06	-3.485E-06	-3.503E-06	9.947E-07	2.709E-07
451	DEAD	0.00003	-0.000049	-0.001147	0.000432	-0.00005	0.000011
451	LIVE	-7.808E-06	-0.000094	-0.000956	0.000327	-0.000042	0.00001
451	SX	0.006873	0.002467	0.000015	0.000013	0.000019	0.000307
451	SY	0.00359	0.01184	0.000019	0.000019	0.000025	0.001074
451	WB	-3.213E-06	-4.914E-06	-3.829E-06	-3.975E-06	-3.464E-07	2.648E-07
452	DEAD	0.00003	-0.00004	-0.001023	0.000447	-0.000168	0.00001
452	LIVE	-7.830E-06	-0.000085	-0.000847	0.000356	-0.000145	9.708E-06
452	SX	0.006873	0.002457	0.000031	0.000027	0.000019	0.000307
452	SY	0.00359	0.011027	0.000052	0.000016	0.000057	0.001074
452	WB	-3.213E-06	-4.675E-06	-2.989E-06	-2.276E-06	-9.773E-07	2.578E-07
453	DEAD	0.00003	-0.000033	-0.000913	0.000455	-0.000069	0.000011
453	LIVE	-7.847E-06	-0.000079	-0.000753	0.000371	-0.000057	9.885E-06
453	SX	0.006873	0.002469	0.000037	7.117E-06	9.655E-06	0.000307
453	SY	0.00359	0.010442	0.000089	0.000024	0.000017	0.001074
453	WB	-3.213E-06	-4.504E-06	-2.437E-06	-1.142E-06	-2.479E-07	2.521E-07
454	DEAD	0.00003	-0.000021	-0.00096	0.00042	0.000043	0.000011
454	LIVE	-7.874E-06	-0.000068	-0.000798	0.000329	0.000041	0.00001
454	SX	0.006873	0.002522	0.000021	0.000014	0.000011	0.000307
454	SY	0.00359	0.009568	0.000058	0.000016	0.000028	0.001074
454	WB	-3.214E-06	-4.251E-06	-2.868E-06	-3.331E-06	3.531E-07	2.420E-07
455	DEAD	0.00003	-0.000011	-0.000956	0.000413	-0.000056	0.000011
455	LIVE	-7.900E-06	-0.000059	-0.000797	0.000319	-0.000052	9.759E-06
455	SX	0.006873	0.002598	0.000023	0.000014	0.000011	0.000306
455	SY	0.00359	0.008851	0.000057	0.000016	0.000024	0.001074
455	WB	-3.214E-06	-4.035E-06	-2.832E-06	-3.757E-06	-6.276E-07	2.396E-07
456	DEAD	0.00003	-8.139E-07	-0.000881	0.000448	0.00002	0.000011
456	LIVE	-7.927E-06	-0.00005	-0.000723	0.000367	3.400E-06	9.773E-06
456	SX	0.006873	0.002717	0.000034	7.906E-06	0.000011	0.000306
456	SY	0.00359	0.008088	0.000086	0.000023	0.000012	0.001074
456	WB	-3.214E-06	-3.791E-06	-1.621E-06	-1.299E-06	-1.235E-06	2.314E-07
457	DEAD	0.00003	0.00001	-0.000984	0.000474	0.0001	0.000011
457	LIVE	-7.950E-06	-0.00004	-0.000796	0.000398	0.000073	9.877E-06
457	SX	0.006873	0.002851	0.000014	0.000024	0.000022	0.000306
457	SY	0.00359	0.007476	0.000039	0.000016	0.000052	0.001074
457	WB	-3.214E-06	-3.583E-06	-5.971E-07	-9.597E-07	-9.166E-07	2.185E-07
458	DEAD	0.00003	0.00002	-0.001029	0.000475	-0.000017	0.000011
458	LIVE	-7.975E-06	-0.000031	-0.000827	0.000397	-0.000022	9.343E-06
458	SX	0.006873	0.003	1.845E-06	0.000012	0.000013	0.000306
458	SY	0.00359	0.006973	0.000015	0.000019	0.000015	0.001074
458	WB	-3.215E-06	-3.395E-06	8.728E-08	-1.266E-06	-6.883E-07	2.067E-07
459	DEAD	0.00003	0.000029	-0.000967	0.000456	-0.000052	0.00001
459	LIVE	-8.000E-06	-0.000023	-0.00077	0.000373	-0.000046	8.846E-06
459	SX	0.006873	0.003165	0.000015	0.000039	0.000017	0.000306
459	SY	0.00359	0.006574	0.000019	0.000029	0.00003	0.001074
459	WB	-3.215E-06	-3.218E-06	6.633E-07	-1.789E-06	-5.777E-07	1.952E-07
460	DEAD	0.00003	0.000038	-0.000999	0.000505	0.000299	0.00001
460	LIVE	-8.022E-06	-0.000016	-0.0008	0.00041	0.000263	8.863E-06
460	SX	0.006873	0.003338	0.000025	0.000024	0.000013	0.000306
460	SY	0.00359	0.006308	0.000044	0.000042	8.545E-06	0.001074
460	WB	-3.215E-06	-3.059E-06	9.829E-07	-1.739E-06	3.194E-07	1.971E-07

Table 28: Joint Displacements

Joint	OutputCase	U1	U2	U3	R1	R2	R3
		m	m	m	Radians	Radians	Radians
461	DEAD	0.00003	0.000047	-0.001524	0.000523	0.00061	0.00001
461	LIVE	-8.059E-06	-7.369E-06	-0.001259	0.000441	0.000536	8.851E-06
461	SX	0.006873	0.003538	0.000013	0.000035	0.000019	0.000306
461	SY	0.00359	0.006167	0.000023	0.000028	0.000028	0.001074
461	WB	-3.216E-06	-2.893E-06	4.023E-08	-1.343E-06	1.105E-06	1.806E-07
462	DEAD	0.00003	0.000056	-0.002022	0.00057	0.000403	0.00001
462	LIVE	-8.095E-06	2.601E-07	-0.001697	0.000496	0.000353	8.684E-06
462	SX	0.006874	0.003741	6.339E-06	0.000032	0.000021	0.000306
462	SY	0.00359	0.006184	7.800E-06	0.000021	0.000018	0.001073
462	WB	-3.216E-06	-2.743E-06	-7.934E-07	-3.582E-07	5.352E-07	1.760E-07
463	DEAD	0.00003	0.000065	-0.002206	0.000559	-0.000054	0.00001
463	LIVE	-8.134E-06	7.773E-06	-0.001855	0.000498	-0.00005	8.623E-06
463	SX	0.006874	0.003953	0.000025	5.676E-06	0.000036	0.000306
463	SY	0.00359	0.00635	0.000013	0.00001	0.000013	0.001073
463	WB	-3.217E-06	-2.600E-06	-9.189E-07	6.688E-07	-6.165E-08	1.709E-07
464	DEAD	0.00003	0.000075	-0.001915	0.000536	-0.000567	0.00001
464	LIVE	-8.170E-06	0.000015	-0.0016	0.000477	-0.000494	8.666E-06
464	SX	0.006874	0.004172	0.000051	0.000032	0.000015	0.000306
464	SY	0.00359	0.006653	0.000018	0.000018	0.000014	0.001073
464	WB	-3.217E-06	-2.459E-06	-7.843E-07	1.004E-06	-9.015E-08	1.704E-07
465	DEAD	0.00003	0.000084	-0.001217	0.000424	-0.0009	0.00001
465	LIVE	-8.203E-06	0.000023	-0.000995	0.000369	-0.000777	8.600E-06
465	SX	0.006873	0.004397	0.000043	0.000043	0.000044	0.000306
465	SY	0.00359	0.007076	0.000021	0.000026	0.000048	0.001073
465	WB	-3.218E-06	-2.317E-06	-8.058E-07	8.138E-07	1.566E-07	1.679E-07
471	DEAD	-0.000026	-0.000115	-0.000816	0.000433	0.000387	8.860E-06
471	LIVE	-0.000059	-0.000155	-0.00064	0.000368	0.00033	8.050E-06
471	SX	0.006836	0.003273	8.101E-06	0.000039	0.000033	0.000307
471	SY	0.004021	0.017952	0.000018	0.000033	0.000088	0.001071
471	WB	-4.570E-06	-6.485E-06	-3.034E-07	3.080E-07	1.234E-07	2.110E-07
472	DEAD	-0.000026	-0.000107	-0.001017	0.00053	0.000025	8.890E-06
472	LIVE	-0.000059	-0.000148	-0.000814	0.000455	0.000027	8.111E-06
472	SX	0.006836	0.003097	5.403E-06	5.120E-06	5.338E-06	0.000307
472	SY	0.004021	0.017051	0.000018	0.000017	2.633E-06	0.001071
472	WB	-4.570E-06	-6.293E-06	-4.853E-07	4.633E-07	2.777E-07	2.145E-07
473	DEAD	-0.000026	-0.000099	-0.000859	0.000454	-0.000348	8.727E-06
473	LIVE	-0.000059	-0.000141	-0.000686	0.000393	-0.000289	7.976E-06
473	SX	0.006836	0.002936	7.281E-06	0.000036	0.000014	0.000307
473	SY	0.004021	0.016156	0.000012	0.000017	0.000061	0.001072
473	WB	-4.571E-06	-6.100E-06	-7.946E-07	6.494E-07	3.836E-07	2.135E-07
474	DEAD	-0.000026	-0.00009	-0.000325	0.000158	-0.000548	8.968E-06
474	LIVE	-0.000059	-0.000132	-0.000242	0.000139	-0.000453	8.157E-06
474	SX	0.006836	0.002769	0.000031	3.762E-06	0.000025	0.000307
474	SY	0.004021	0.015101	0.000104	0.000015	0.000094	0.001071
474	WB	-4.571E-06	-5.868E-06	-1.236E-06	9.565E-07	4.204E-07	2.108E-07
475	DEAD	-0.000026	-0.000124	-0.000336	0.00017	0.000548	8.686E-06
475	LIVE	-0.000059	-0.000163	-0.000233	0.000133	0.000463	7.929E-06
475	SX	0.006836	0.00347	0.000054	2.360E-06	0.000054	0.000307
475	SY	0.004021	0.018895	0.000139	6.267E-06	0.000141	0.001071
475	WB	-4.570E-06	-6.682E-06	-2.494E-07	7.843E-08	4.072E-08	2.142E-07
476	DEAD	-8.006E-06	-0.000115	-0.000836	-0.000415	0.000406	8.859E-06
476	LIVE	-0.000043	-0.000155	-0.000659	-0.00035	0.00035	8.071E-06
476	SX	0.006781	0.003273	5.230E-06	0.000035	0.000016	0.000307
476	SY	0.002355	0.017953	0.000017	0.000015	0.000079	0.001071

Table 28: Joint Displacements

Joint	OutputCase	U1	U2	U3	R1	R2	R3
		m	m	m	Radians	Radians	Radians
476	WB	-4.102E-06	-6.490E-06	-1.246E-06	6.267E-07	1.028E-06	2.119E-07
477	DEAD	-8.090E-06	-0.000107	-0.001048	-0.000498	0.000028	8.938E-06
477	LIVE	-0.000043	-0.000148	-0.000845	-0.000424	0.000032	8.119E-06
477	SX	0.006781	0.003097	3.486E-06	1.119E-06	4.487E-06	0.000307
477	SY	0.002355	0.017051	0.000017	5.715E-06	5.291E-06	0.001071
477	WB	-4.102E-06	-6.302E-06	-1.964E-06	1.030E-06	4.904E-07	2.113E-07
478	DEAD	-8.187E-06	-0.000099	-0.000883	-0.000421	-0.000372	8.776E-06
478	LIVE	-0.000043	-0.000141	-0.000713	-0.00036	-0.000306	8.089E-06
478	SX	0.00678	0.002936	8.185E-06	0.00004	0.000028	0.000307
478	SY	0.002354	0.016156	5.587E-06	0.000013	0.000053	0.001072
478	WB	-4.101E-06	-6.100E-06	-2.128E-06	5.643E-07	-4.845E-08	2.230E-07
479	DEAD	-8.337E-06	-0.000089	-0.000307	-0.000138	-0.000591	0.000012
479	LIVE	-0.000043	-0.000131	-0.000238	-0.000118	-0.000486	0.00001
479	SX	0.006779	0.002769	0.000056	6.266E-06	0.00005	0.000307
479	SY	0.002354	0.015101	0.000088	0.000024	0.000085	0.001072
479	WB	-4.100E-06	-5.857E-06	-1.877E-06	-4.656E-07	-2.925E-07	2.197E-07
480	DEAD	-7.951E-06	-0.000124	-0.000334	-0.000168	0.000573	9.149E-06
480	LIVE	-0.000043	-0.000163	-0.000229	-0.000131	0.000488	8.305E-06
480	SX	0.006781	0.00347	0.000028	1.461E-06	0.000027	0.000307
480	SY	0.002355	0.018895	0.000124	4.885E-06	0.000123	0.001071
480	WB	-4.103E-06	-6.683E-06	-1.278E-07	1.727E-08	1.238E-06	2.098E-07
481	DEAD	0.000056	0.000091	-0.000463	-0.000256	-0.000989	9.594E-06
481	LIVE	0.000016	0.000029	-0.000347	-0.000202	-0.000855	8.169E-06
481	SX	0.007035	0.004567	0.000088	8.200E-06	0.000094	0.000306
481	SY	0.005998	0.007455	0.000141	7.411E-06	0.000131	0.001073
481	WB	-2.672E-06	-2.182E-06	-1.192E-06	3.471E-08	-5.484E-07	1.708E-07
482	DEAD	0.00003	0.000091	-0.00048	0.000149	-0.000972	0.000011
482	LIVE	-7.957E-06	0.000029	-0.00036	0.000117	-0.000836	9.415E-06
482	SX	0.006875	0.004594	0.000038	0.000026	0.000071	0.000306
482	SY	0.003618	0.007519	0.000063	0.000043	0.000068	0.001073
482	WB	-3.213E-06	-2.192E-06	-1.032E-06	4.765E-07	2.893E-07	1.848E-07
483	DEAD	-0.000037	0.000074	-0.000441	0.00006	-0.000088	9.963E-06
483	LIVE	-0.000063	0.000015	-0.000282	0.000029	-0.000058	7.988E-06
483	SX	0.006874	0.004171	0.000038	0.000029	0.000022	0.000306
483	SY	0.004628	0.006652	0.000031	0.000032	0.000019	0.001071
483	WB	-4.244E-06	-2.499E-06	-3.454E-07	1.524E-07	-8.825E-08	1.290E-07
484	DEAD	-0.000037	0.000065	-0.000458	0.000047	0.00005	0.00001
484	LIVE	-0.000063	7.242E-06	-0.000287	0.000017	0.000046	8.013E-06
484	SX	0.006874	0.003952	0.000016	0.000011	0.000035	0.000306
484	SY	0.004633	0.006348	0.000034	0.000026	0.000021	0.00107
484	WB	-4.244E-06	-2.617E-06	-3.706E-07	1.242E-07	5.185E-08	1.285E-07
485	DEAD	-0.000028	0.000074	-0.000505	0.000083	-0.000098	0.00001
485	LIVE	-0.000056	0.000015	-0.000337	0.000089	-0.000067	8.003E-06
485	SX	0.006837	0.004171	0.00003	0.000013	0.000029	0.000307
485	SY	0.003762	0.006652	0.000011	0.000018	0.000012	0.001072
485	WB	-4.124E-06	-2.496E-06	-2.997E-07	-4.011E-07	-7.636E-08	1.270E-07
486	DEAD	-0.000028	0.000065	-0.000512	0.000076	0.00008	0.00001
486	LIVE	-0.000056	7.260E-06	-0.000334	0.000084	0.000071	8.091E-06
486	SX	0.006837	0.003952	0.000011	0.000022	0.000039	0.000307
486	SY	0.003768	0.006348	0.00001	0.000023	0.000015	0.001073
486	WB	-4.125E-06	-2.616E-06	-3.328E-07	-3.384E-07	3.549E-08	1.310E-07
487	DEAD	-0.000037	0.000083	-0.000305	0.000058	-0.000194	9.912E-06
487	LIVE	-0.000063	0.000022	-0.000188	0.000034	-0.000134	7.845E-06
487	SX	0.006874	0.004396	0.00003	0.00004	0.000046	0.000305

Table 28: Joint Displacements

Joint	OutputCase	U1	U2	U3	R1	R2	R3
		m	m	m	Radians	Radians	Radians
487	SY	0.004628	0.007075	0.000016	0.000041	0.000049	0.00107
487	WB	-4.244E-06	-2.388E-06	-2.445E-07	1.566E-07	-5.030E-08	1.184E-07
488	DEAD	-0.000037	0.000091	-0.000124	0.000024	-0.000229	0.00001
488	LIVE	-0.000063	0.000028	-0.000064	0.000015	-0.000155	8.030E-06
488	SX	0.006874	0.004604	0.000034	5.309E-06	0.000081	0.000305
488	SY	0.004634	0.007544	0.000047	7.862E-06	0.00008	0.001069
488	WB	-4.245E-06	-2.300E-06	-2.578E-07	6.602E-08	3.026E-08	1.227E-07
489	DEAD	-0.000028	0.000083	-0.000345	0.000032	-0.000224	9.892E-06
489	LIVE	-0.000056	0.000022	-0.000222	0.000042	-0.000162	7.869E-06
489	SX	0.006837	0.004396	0.000031	0.000031	0.000039	0.000306
489	SY	0.003763	0.007075	9.955E-06	0.000012	0.000013	0.001072
489	WB	-4.124E-06	-2.381E-06	-1.886E-07	-2.520E-07	-2.133E-07	1.228E-07
490	DEAD	-0.000028	0.000091	-0.000138	0.000014	-0.000258	9.689E-06
490	LIVE	-0.000056	0.000028	-0.000073	0.000015	-0.000186	7.770E-06
490	SX	0.006837	0.004606	0.000028	0.000015	0.000078	0.000308
490	SY	0.003768	0.007548	0.000013	0.000023	0.000029	0.001073
490	WB	-4.125E-06	-2.287E-06	4.995E-08	-1.848E-07	-3.070E-07	1.296E-07
491	DEAD	-0.000037	0.000056	-0.000357	0.000031	0.000157	9.997E-06
491	LIVE	-0.000063	-8.772E-08	-0.000204	8.804E-06	0.000122	8.038E-06
491	SX	0.006874	0.00374	0.000023	0.000024	0.000011	0.000306
491	SY	0.004634	0.006179	0.000036	0.000033	0.000015	0.00107
491	WB	-4.244E-06	-2.733E-06	-2.573E-07	6.090E-08	1.583E-07	1.326E-07
492	DEAD	-0.000036	0.000046	-0.000176	-2.518E-06	0.000197	9.675E-06
492	LIVE	-0.000063	-7.978E-06	-0.000067	-6.350E-06	0.000146	7.680E-06
492	SX	0.006871	0.003521	0.000022	0.00002	0.00005	0.000306
492	SY	0.004563	0.006162	0.000016	0.000013	0.000045	0.001067
492	WB	-4.235E-06	-2.854E-06	-9.316E-08	-3.227E-08	1.715E-07	1.231E-07
493	DEAD	-0.000028	0.000056	-0.000371	8.751E-06	0.000196	0.00001
493	LIVE	-0.000056	-1.300E-07	-0.000218	0.000025	0.000156	8.084E-06
493	SX	0.006837	0.00374	0.00003	0.000038	0.00002	0.000307
493	SY	0.003768	0.00618	0.000023	0.000024	0.000032	0.001071
493	WB	-4.125E-06	-2.737E-06	-2.325E-07	-1.285E-07	1.773E-07	1.185E-07
494	DEAD	-0.000027	0.000047	-0.000176	-0.000022	0.000222	0.00001
494	LIVE	-0.000055	-7.466E-06	-0.000068	-9.960E-06	0.00017	8.185E-06
494	SX	0.006835	0.003537	0.000035	8.147E-06	0.000049	0.000307
494	SY	0.003707	0.006157	0.000062	5.254E-06	0.000055	0.001074
494	WB	-4.117E-06	-2.844E-06	-1.938E-08	-2.250E-08	2.479E-07	1.259E-07
495	DEAD	-4.683E-06	-0.000038	-0.000496	0.000378	-0.000068	0.000011
495	LIVE	-0.000039	-0.000084	-0.00056	0.000476	-0.00009	0.00001
495	SX	0.006779	0.00246	0.000035	0.000038	7.275E-06	0.000307
495	SY	0.002208	0.010837	0.000012	0.000016	4.156E-06	0.001073
495	WB	-3.975E-06	-4.669E-06	-0.000019	0.000016	-3.513E-06	2.545E-07
496	DEAD	-4.676E-06	-0.000046	-0.000551	0.000282	-0.000015	0.000011
496	LIVE	-0.000039	-0.000092	-0.000636	0.000345	-0.000026	0.00001
496	SX	0.006779	0.00246	0.000027	0.000021	0.000022	0.000307
496	SY	0.002208	0.011526	0.000012	7.949E-06	0.00001	0.001073
496	WB	-3.979E-06	-4.869E-06	-0.000023	0.00001	-1.393E-06	2.507E-07
497	DEAD	-4.671E-06	-0.000058	-0.00047	0.000204	0.00015	0.000011
497	LIVE	-0.000039	-0.000103	-0.000537	0.000243	0.000188	0.00001
497	SX	0.006779	0.002498	5.129E-06	0.000025	0.00002	0.000307
497	SY	0.002208	0.012516	0.000013	0.000026	8.521E-06	0.001072
497	WB	-3.983E-06	-5.146E-06	-0.000019	6.701E-06	6.621E-06	2.498E-07
498	DEAD	-4.657E-06	-0.000069	-0.000299	0.000151	0.000206	0.000011
498	LIVE	-0.000039	-0.000112	-0.000323	0.000187	0.000248	0.00001

Table 28: Joint Displacements

Joint	OutputCase	U1	U2	U3	R1	R2	R3
		m	m	m	Radians	Radians	Radians
498	SX	0.006779	0.00256	8.193E-06	0.000043	0.000025	0.000307
498	SY	0.002208	0.013345	5.311E-06	0.000045	0.000046	0.001072
498	WB	-3.986E-06	-5.381E-06	-0.000012	5.713E-06	8.616E-06	2.572E-07
499	DEAD	-4.645E-06	-0.000077	-0.000147	0.000051	0.000208	0.000011
499	LIVE	-0.000039	-0.00012	-0.000147	0.000069	0.000238	9.916E-06
499	SX	0.006779	0.002632	0.000028	0.000011	0.000051	0.000307
499	SY	0.002208	0.014049	0.000054	0.000051	0.000072	0.001072
499	WB	-3.988E-06	-5.577E-06	-5.823E-06	2.398E-06	8.026E-06	2.288E-07
500	DEAD	-4.686E-06	-0.000028	-0.000459	0.000389	0.000017	0.000011
500	LIVE	-0.000039	-0.000075	-0.00052	0.000495	0.000044	9.981E-06
500	SX	0.006779	0.002489	0.000014	7.446E-06	0.00002	0.000307
500	SY	0.002208	0.010058	5.549E-06	5.742E-06	6.902E-06	0.001073
500	WB	-3.970E-06	-4.437E-06	-0.000018	0.000017	2.283E-06	2.499E-07
501	DEAD	-4.687E-06	-0.00002	-0.000507	0.000325	0.00009	0.000011
501	LIVE	-0.000039	-0.000068	-0.000604	0.000419	0.000156	9.825E-06
501	SX	0.006779	0.002532	5.202E-06	0.000012	4.684E-06	0.000307
501	SY	0.002208	0.009467	4.689E-06	5.751E-06	1.522E-06	0.001074
501	WB	-3.965E-06	-4.259E-06	-0.000022	0.000015	7.284E-06	2.399E-07
502	DEAD	-4.682E-06	-9.010E-06	-0.000622	0.00044	0.000101	0.000011
502	LIVE	-0.000039	-0.000057	-0.000805	0.000617	0.000178	9.621E-06
502	SX	0.006779	0.002631	4.957E-06	2.424E-06	0.000012	0.000306
502	SY	0.002209	0.008623	3.486E-06	5.502E-06	4.340E-06	0.001074
502	WB	-3.959E-06	-4.011E-06	-0.000032	0.000024	8.659E-06	2.274E-07
503	DEAD	-4.669E-06	-1.322E-06	-0.000691	0.00067	0.000114	0.000011
503	LIVE	-0.000039	-0.000051	-0.000925	0.000988	0.000192	9.500E-06
503	SX	0.00678	0.002719	0.000012	0.000042	0.00002	0.000306
503	SY	0.002208	0.008096	6.439E-06	0.000014	7.055E-06	0.001074
503	WB	-3.954E-06	-3.853E-06	-0.000038	0.00004	9.328E-06	2.196E-07
504	DEAD	-4.659E-06	8.562E-06	-0.000802	0.000838	0.000057	0.000011
504	LIVE	-0.000039	-0.000042	-0.00111	0.001291	0.000101	9.453E-06
504	SX	0.00678	0.002853	0.000022	0.000061	5.755E-06	0.000306
504	SY	0.002209	0.007482	9.980E-06	0.000021	5.275E-06	0.001075
504	WB	-3.949E-06	-3.652E-06	-0.000046	0.000055	5.314E-06	2.167E-07
505	DEAD	-4.647E-06	0.000018	-0.000777	0.000762	-0.000117	0.000011
505	LIVE	-0.000039	-0.000033	-0.001082	0.001211	-0.000174	9.400E-06
505	SX	0.00678	0.003001	5.808E-06	0.000017	0.000023	0.000306
505	SY	0.002209	0.006977	7.697E-06	0.000016	9.029E-06	0.001075
505	WB	-3.944E-06	-3.462E-06	-0.000046	0.000052	-7.111E-06	2.143E-07
506	DEAD	-4.638E-06	0.000028	-0.000606	0.000495	-0.000207	0.000011
506	LIVE	-0.000039	-0.000025	-0.000818	0.000797	-0.000335	9.394E-06
506	SX	0.00678	0.003166	0.000012	0.000042	9.733E-06	0.000306
506	SY	0.002209	0.006577	4.949E-06	0.000029	0.000019	0.001075
506	WB	-3.940E-06	-3.273E-06	-0.000034	0.000035	-0.000016	2.156E-07
508	DEAD	-4.620E-06	0.000041	-0.000339	0.000194	-0.000212	0.00001
508	LIVE	-0.000039	-0.000013	-0.000371	0.000214	-0.000354	9.342E-06
508	SX	0.00678	0.003425	0.000029	0.00002	0.000039	0.000306
508	SY	0.002209	0.006226	0.000043	0.000036	0.000043	0.001075
508	WB	-3.936E-06	-3.001E-06	-0.000012	4.765E-06	-0.000018	2.214E-07
509	DEAD	-0.00001	-0.000033	-0.000315	0.000186	0.000532	7.004E-06
509	LIVE	-0.000036	-0.00005	-0.000226	0.000145	0.000449	6.260E-06
509	SX	0.004756	0.002583	0.000076	7.947E-06	0.00009	0.000215
509	SY	0.002943	0.014212	0.000363	0.000034	0.000339	0.0008
509	WB	-3.260E-06	-2.274E-06	-1.454E-07	-2.423E-08	7.898E-08	1.482E-07
510	DEAD	-9.953E-06	-7.818E-06	-0.000284	0.000161	-0.000544	6.326E-06

Table 28: Joint Displacements

Joint	OutputCase	U1	U2	U3	R1	R2	R3
		m	m	m	Radians	Radians	Radians
510	LIVE	-0.000036	-0.000028	-0.000218	0.00014	-0.00045	5.694E-06
510	SX	0.004756	0.002015	0.000065	0.000014	0.000051	0.000215
510	SY	0.002943	0.011312	0.000377	0.000067	0.000261	0.0008
510	WB	-3.259E-06	-1.705E-06	-1.471E-06	1.223E-06	5.078E-07	1.486E-07
511	DEAD	-9.981E-06	-0.000027	-0.000782	0.000442	0.000375	6.568E-06
511	LIVE	-0.000036	-0.000045	-0.000621	0.000373	0.00032	5.925E-06
511	SX	0.004756	0.00243	0.000018	0.000086	0.000044	0.000215
511	SY	0.002943	0.013494	0.000074	0.000072	0.000197	0.000801
511	WB	-3.259E-06	-2.133E-06	-2.421E-07	2.035E-07	1.951E-07	1.501E-07
512	DEAD	-9.969E-06	-0.000021	-0.000974	0.000532	0.00002	6.677E-06
512	LIVE	-0.000036	-0.00004	-0.000788	0.000456	0.000022	5.996E-06
512	SX	0.004756	0.00229	9.367E-06	8.043E-06	0.000019	0.000215
512	SY	0.002943	0.012805	0.000011	0.000031	0.000031	0.000801
512	WB	-3.259E-06	-1.998E-06	-5.134E-07	3.469E-07	3.923E-07	1.495E-07
513	DEAD	-9.955E-06	-0.000015	-0.000816	0.000455	-0.000347	6.739E-06
513	LIVE	-0.000036	-0.000034	-0.000659	0.000392	-0.000287	6.033E-06
513	SX	0.004756	0.002158	0.000022	0.000085	0.000032	0.000215
513	SY	0.002943	0.012121	0.000115	0.000035	0.000186	0.000801
513	WB	-3.259E-06	-1.863E-06	-9.308E-07	6.137E-07	4.919E-07	1.489E-07
514	DEAD	-2.198E-06	-0.000033	-0.000452	5.773E-06	0.000732	7.864E-06
514	LIVE	-0.000029	-0.00005	-0.000334	3.345E-06	0.000638	7.121E-06
514	SX	0.004734	0.002583	0.000019	0.000069	7.074E-06	0.000216
514	SY	0.002227	0.014212	0.000014	0.000371	0.000012	0.000796
514	WB	-3.091E-06	-2.272E-06	3.950E-09	-1.354E-07	3.547E-07	1.702E-07
515	DEAD	-2.196E-06	-8.147E-06	-0.000398	-4.705E-06	-0.000756	8.061E-06
515	LIVE	-0.000029	-0.000028	-0.000323	1.850E-06	-0.000638	7.220E-06
515	SX	0.004733	0.002014	0.000049	0.000051	0.000016	0.000216
515	SY	0.002227	0.011311	0.000184	0.000255	0.000091	0.000794
515	WB	-3.089E-06	-1.705E-06	-2.587E-06	4.984E-07	1.116E-06	1.649E-07
516	DEAD	-2.252E-06	-0.000027	-0.001093	0.000028	0.000509	5.578E-06
516	LIVE	-0.000029	-0.000045	-0.000893	0.000026	0.000447	4.938E-06
516	SX	0.004733	0.00243	0.000022	0.000016	0.000014	0.000215
516	SY	0.002227	0.013494	0.000025	0.000092	0.000018	0.000806
516	WB	-3.090E-06	-2.133E-06	-3.393E-07	7.723E-09	4.126E-07	1.281E-07
517	DEAD	-2.221E-06	-0.000021	-0.001349	0.000035	0.000026	7.712E-06
517	LIVE	-0.000029	-0.00004	-0.001121	0.000034	0.000031	6.991E-06
517	SX	0.004733	0.00229	8.931E-06	4.453E-06	0.000035	0.000216
517	SY	0.002227	0.012806	0.000045	0.000021	0.000038	0.000797
517	WB	-3.090E-06	-1.998E-06	-7.744E-07	1.111E-07	6.013E-07	1.694E-07
518	DEAD	-2.081E-06	-0.000015	-0.001136	0.000028	-0.000477	5.787E-06
518	LIVE	-0.000029	-0.000034	-0.000947	0.000028	-0.0004	5.159E-06
518	SX	0.004733	0.002158	0.000037	9.423E-06	0.000022	0.000215
518	SY	0.002227	0.01212	0.000093	0.000045	0.00007	0.000806
518	WB	-3.088E-06	-1.862E-06	-1.443E-06	2.198E-07	9.093E-07	1.356E-07
519	DEAD	7.182E-06	-0.000034	-0.000326	-0.000179	0.000574	6.432E-06
519	LIVE	-0.000021	-0.000051	-0.000232	-0.00014	0.00049	5.785E-06
519	SX	0.004723	0.002583	0.000062	0.000012	0.000062	0.000215
519	SY	0.001679	0.014213	0.000356	0.000066	0.000335	0.0008
519	WB	-2.909E-06	-2.273E-06	1.080E-07	4.448E-08	4.082E-07	1.485E-07
520	DEAD	7.651E-06	-8.538E-06	-0.000274	-0.000148	-0.000606	3.732E-06
520	LIVE	-0.00002	-0.000028	-0.000219	-0.000128	-0.0005	3.472E-06
520	SX	0.004722	0.002014	0.000063	0.000022	0.000071	0.000214
520	SY	0.001679	0.011309	0.000117	0.000131	0.000154	0.000816
520	WB	-2.906E-06	-1.706E-06	-2.320E-06	-9.164E-07	8.928E-07	1.266E-07

Table 28: Joint Displacements

Joint	OutputCase	U1	U2	U3	R1	R2	R3
		m	m	m	Radians	Radians	Radians
521	DEAD	7.252E-06	-0.000027	-0.00083	-0.000409	0.000405	6.900E-06
521	LIVE	-0.000021	-0.000045	-0.000663	-0.000345	0.00035	6.172E-06
521	SX	0.004723	0.00243	0.000021	0.000079	0.000039	0.000215
521	SY	0.001679	0.013495	0.000063	0.000026	0.000226	0.000801
521	WB	-2.908E-06	-2.131E-06	-2.852E-07	-9.071E-08	4.624E-07	1.504E-07
522	DEAD	7.355E-06	-0.000021	-0.001038	-0.000486	0.000022	6.722E-06
522	LIVE	-0.000021	-0.000039	-0.000847	-0.000414	0.000026	6.036E-06
522	SX	0.004723	0.00229	9.573E-06	4.670E-06	0.000017	0.000215
522	SY	0.001679	0.012806	0.00005	0.000017	0.000048	0.000801
522	WB	-2.908E-06	-1.993E-06	-7.552E-07	-1.346E-07	6.092E-07	1.505E-07
523	DEAD	7.473E-06	-0.000015	-0.000865	-0.000413	-0.000384	6.976E-06
523	LIVE	-0.000021	-0.000034	-0.000708	-0.000354	-0.000316	6.230E-06
523	SX	0.004722	0.002158	5.310E-06	0.000083	0.000028	0.000215
523	SY	0.001679	0.012121	0.000031	0.000052	0.000083	0.0008
523	WB	-2.907E-06	-1.863E-06	-1.388E-06	-2.722E-07	7.915E-07	1.501E-07
524	DEAD	0.000027	-0.000024	-0.001289	0.000613	0.000746	4.701E-06
524	LIVE	-3.538E-06	-0.000041	-0.001054	0.000521	0.000641	4.073E-06
524	SX	0.004818	0.002429	0.00008	0.00011	0.000072	0.000214
524	SY	0.002648	0.013516	0.00019	0.000054	0.0002	0.00081
524	WB	-2.438E-06	-2.011E-06	-7.323E-08	1.539E-07	7.779E-08	1.107E-07
525	DEAD	0.000027	-0.00002	-0.001789	0.000784	0.00032	4.834E-06
525	LIVE	-3.498E-06	-0.000038	-0.001485	0.000668	0.000277	4.173E-06
525	SX	0.004818	0.002289	0.000093	0.000088	0.000018	0.000214
525	SY	0.002648	0.012818	0.000092	0.000091	0.000055	0.000811
525	WB	-2.437E-06	-1.915E-06	-1.670E-07	5.049E-08	1.223E-07	1.105E-07
526	DEAD	0.000027	-0.000015	-0.001857	0.000807	-0.000153	4.965E-06
526	LIVE	-3.454E-06	-0.000034	-0.001545	0.000686	-0.000132	4.314E-06
526	SX	0.004818	0.002157	0.000054	0.000021	0.000056	0.000214
526	SY	0.002648	0.012124	0.000076	0.000119	0.000018	0.00081
526	WB	-2.437E-06	-1.812E-06	-2.867E-07	-1.643E-07	1.300E-07	1.143E-07
527	DEAD	0.000027	-0.000011	-0.001541	0.000721	-0.000473	4.986E-06
527	LIVE	-3.401E-06	-0.00003	-0.001273	0.000606	-0.000406	4.335E-06
527	SX	0.004818	0.002035	0.000013	0.000075	0.000043	0.000214
527	SY	0.002648	0.011434	0.000079	0.000134	0.000017	0.000811
527	WB	-2.436E-06	-1.711E-06	-4.108E-07	-3.817E-07	1.933E-07	1.141E-07
528	DEAD	0.000027	-6.203E-06	-0.00107	0.000566	-0.000436	5.259E-06
528	LIVE	-3.348E-06	-0.000026	-0.000871	0.000468	-0.000366	4.562E-06
528	SX	0.004818	0.001925	0.000025	0.000066	2.876E-06	0.000214
528	SY	0.002648	0.010748	0.000086	0.000098	4.775E-06	0.000811
528	WB	-2.436E-06	-1.608E-06	-7.243E-07	-4.491E-07	7.578E-07	1.143E-07
529	DEAD	0.000027	-3.664E-06	-0.000891	0.000519	-0.000201	4.901E-06
529	LIVE	-3.317E-06	-0.000024	-0.000723	0.000424	-0.00016	4.312E-06
529	SX	0.004817	0.001873	0.000021	0.000022	0.000021	0.000214
529	SY	0.002648	0.010396	0.000086	0.000119	0.000052	0.000811
529	WB	-2.436E-06	-1.555E-06	-1.178E-06	-4.323E-07	1.492E-06	1.176E-07
530	DEAD	0.000027	-1.786E-06	-0.00088	0.000452	0.000026	4.557E-06
530	LIVE	-3.281E-06	-0.000022	-0.000719	0.000364	0.000037	4.044E-06
530	SX	0.004817	0.001828	7.677E-06	0.00005	0.000025	0.000214
530	SY	0.002648	0.010068	0.00004	0.000091	0.000094	0.000813
530	WB	-2.435E-06	-1.502E-06	-2.054E-06	-1.199E-06	2.081E-06	1.196E-07
531	DEAD	0.000027	2.433E-06	-0.000998	0.000418	0.000112	4.763E-06
531	LIVE	-3.200E-06	-0.000018	-0.000836	0.000321	0.000111	4.181E-06
531	SX	0.004817	0.001746	6.580E-06	0.000047	0.000014	0.000214
531	SY	0.002648	0.009393	0.000033	0.000072	0.000037	0.000812

Table 28: Joint Displacements

Joint	OutputCase	U1	U2	U3	R1	R2	R3
		m	m	m	Radians	Radians	Radians
531	WB	-2.434E-06	-1.394E-06	-3.992E-06	-3.188E-06	1.566E-06	1.161E-07
532	DEAD	0.000027	6.848E-06	-0.001036	0.000418	-0.00006	4.992E-06
532	LIVE	-3.116E-06	-0.000014	-0.000878	0.000321	-0.000048	4.342E-06
532	SX	0.004817	0.001683	0.000022	0.000022	0.000032	0.000214
532	SY	0.002648	0.008728	0.000021	0.00003	0.000076	0.000812
532	WB	-2.433E-06	-1.290E-06	-4.647E-06	-3.482E-06	-2.051E-07	1.133E-07
533	DEAD	0.000027	0.000011	-0.000898	0.000429	-0.000186	5.147E-06
533	LIVE	-3.029E-06	-0.00001	-0.000758	0.000349	-0.00016	4.446E-06
533	SX	0.004817	0.00164	0.000047	0.000052	0.000029	0.000214
533	SY	0.002648	0.008075	0.000098	0.000017	0.00014	0.000813
533	WB	-2.432E-06	-1.189E-06	-3.777E-06	-1.341E-06	-1.115E-06	1.108E-07
534	DEAD	0.000027	0.000015	-0.000776	0.000441	-0.000077	4.781E-06
534	LIVE	-2.966E-06	-7.286E-06	-0.000654	0.000371	-0.000064	4.134E-06
534	SX	0.004817	0.001622	0.000057	7.643E-06	0.000017	0.000214
534	SY	0.002648	0.007601	0.000188	0.000039	0.000051	0.000812
534	WB	-2.431E-06	-1.116E-06	-3.102E-06	1.406E-07	-3.625E-07	1.090E-07
535	DEAD	0.000027	0.000019	-0.000827	0.000404	0.000048	4.463E-06
535	LIVE	-2.867E-06	-3.569E-06	-0.000703	0.000329	0.000046	3.862E-06
535	SX	0.004816	0.001619	0.000036	0.000032	0.000012	0.000214
535	SY	0.002647	0.006882	0.000132	0.000013	0.000057	0.000812
535	WB	-2.430E-06	-1.001E-06	-3.526E-06	-1.777E-06	4.111E-07	1.078E-07
536	DEAD	0.000028	0.000023	-0.000825	0.000391	-0.000062	4.704E-06
536	LIVE	-2.779E-06	-1.818E-08	-0.000702	0.000312	-0.000057	4.027E-06
536	SX	0.004816	0.001641	0.000041	0.000029	0.000015	0.000214
536	SY	0.002647	0.006283	0.000117	0.000015	0.000031	0.000812
536	WB	-2.429E-06	-9.046E-07	-3.552E-06	-2.460E-06	-6.310E-07	1.040E-07
537	DEAD	0.000028	0.000029	-0.000741	0.000431	0.000022	4.504E-06
537	LIVE	-2.681E-06	4.394E-06	-0.00062	0.000363	3.200E-06	3.812E-06
537	SX	0.004816	0.001694	0.000051	0.000012	0.000031	0.000214
537	SY	0.002647	0.005633	0.000162	0.000026	0.000026	0.000811
537	WB	-2.428E-06	-8.005E-07	-2.245E-06	-1.063E-07	-1.355E-06	9.819E-08
538	DEAD	0.000028	0.000032	-0.000856	0.00046	0.000116	4.196E-06
538	LIVE	-2.599E-06	7.445E-06	-0.000701	0.000396	0.000083	3.601E-06
538	SX	0.004816	0.001763	0.000032	0.000034	0.000044	0.000214
538	SY	0.002647	0.005094	0.000075	0.000018	0.000097	0.000812
538	WB	-2.427E-06	-7.045E-07	-1.105E-06	1.449E-07	-1.058E-06	1.025E-07
539	DEAD	0.000028	0.000036	-0.000916	0.000475	4.387E-07	4.528E-06
539	LIVE	-2.519E-06	0.000011	-0.000742	0.000407	-7.554E-06	3.891E-06
539	SX	0.004815	0.001849	0.00004	0.000044	0.000013	0.000214
539	SY	0.002647	0.004634	0.000019	0.000026	0.000038	0.000811
539	WB	-2.426E-06	-6.120E-07	-2.826E-07	-2.943E-07	-8.279E-07	1.027E-07
540	DEAD	0.000028	0.00004	-0.000873	0.000474	-0.000024	4.829E-06
540	LIVE	-2.442E-06	0.000014	-0.000702	0.000398	-0.000018	4.157E-06
540	SX	0.004815	0.001949	0.000051	0.000111	0.000032	0.000214
540	SY	0.002647	0.004251	0.000018	0.00005	0.000034	0.000811
540	WB	-2.426E-06	-5.201E-07	3.958E-07	-9.303E-07	-6.526E-07	1.037E-07
541	DEAD	0.000028	0.000045	-0.000937	0.000537	0.000344	5.017E-06
541	LIVE	-2.369E-06	0.000018	-0.000764	0.000447	0.000311	4.378E-06
541	SX	0.004815	0.002058	0.000085	0.000052	0.000028	0.000215
541	SY	0.002647	0.003975	0.00005	0.000059	0.000011	0.000809
541	WB	-2.425E-06	-4.319E-07	7.579E-07	-1.056E-06	2.431E-07	1.076E-07
542	DEAD	0.000028	0.000049	-0.001512	0.000587	0.000674	4.569E-06
542	LIVE	-2.300E-06	0.000022	-0.001278	0.0005	0.000604	4.034E-06
542	SX	0.004814	0.002189	0.000089	0.000075	0.00003	0.000215

Table 28: Joint Displacements

Joint	OutputCase	U1	U2	U3	R1	R2	R3
		m	m	m	Radians	Radians	Radians
542	SY	0.002646	0.003807	0.000031	0.000052	0.000038	0.000807
542	WB	-2.425E-06	-3.260E-07	-8.969E-08	-1.011E-06	1.022E-06	1.098E-07
543	DEAD	0.000028	0.000053	-0.002066	0.00063	0.000445	4.488E-06
543	LIVE	-2.236E-06	0.000025	-0.001777	0.000544	0.000402	3.952E-06
543	SX	0.004814	0.002328	0.000039	0.000096	0.000085	0.000216
543	SY	0.002644	0.003788	0.000018	0.000047	0.000034	0.000806
543	WB	-2.425E-06	-2.297E-07	-8.793E-07	-5.356E-07	5.051E-07	1.063E-07
544	DEAD	0.000028	0.000057	-0.002263	0.000629	-0.000052	4.487E-06
544	LIVE	-2.175E-06	0.000029	-0.001955	0.00055	-0.000045	3.937E-06
544	SX	0.004814	0.002475	0.000056	0.000043	0.000101	0.000216
544	SY	0.002643	0.003907	0.000031	0.000024	0.000033	0.000804
544	WB	-2.425E-06	-1.382E-07	-9.815E-07	6.353E-08	-1.237E-07	1.041E-07
545	DEAD	0.000028	0.000061	-0.001963	0.000586	-0.000589	4.397E-06
545	LIVE	-2.111E-06	0.000033	-0.001689	0.000512	-0.000524	3.861E-06
545	SX	0.004814	0.002629	0.00013	0.000043	0.000042	0.000216
545	SY	0.002643	0.004151	0.00005	0.00004	0.000019	0.000804
545	WB	-2.425E-06	-4.644E-08	-7.292E-07	2.568E-07	-3.474E-07	1.039E-07
546	DEAD	0.000028	0.000065	-0.001234	0.000453	-0.00095	4.392E-06
546	LIVE	-2.056E-06	0.000036	-0.00104	0.000389	-0.000844	3.854E-06
546	SX	0.004814	0.002788	0.000121	0.000086	0.000075	0.000216
546	SY	0.002643	0.004499	0.000045	0.00006	0.000059	0.000804
546	WB	-2.425E-06	4.620E-08	-3.867E-07	2.108E-07	-3.998E-07	1.047E-07
547	DEAD	0.000029	0.000069	-0.00045	0.000176	-0.001036	3.589E-06
547	LIVE	-1.883E-06	0.000039	-0.000344	0.000138	-0.000917	3.169E-06
547	SX	0.004815	0.002927	0.000051	0.000044	0.000132	0.000215
547	SY	0.002665	0.004864	0.00007	0.000074	0.000089	0.000805
547	WB	-2.422E-06	1.272E-07	-7.592E-08	1.478E-07	-4.099E-07	1.054E-07
548	DEAD	0.000027	-0.000028	-0.000456	0.000259	0.00093	5.601E-06
548	LIVE	-3.568E-06	-0.000045	-0.00034	0.000206	0.000795	4.837E-06
548	SX	0.004818	0.002582	0.000081	0.000016	0.000121	0.000214
548	SY	0.002648	0.014244	0.00045	0.000049	0.000301	0.000811
548	WB	-2.438E-06	-2.111E-06	-2.309E-08	7.579E-08	4.660E-08	1.155E-07
549	DEAD	0.000039	-0.000024	-0.001301	-0.000606	0.000755	4.924E-06
549	LIVE	6.841E-06	-0.000041	-0.001065	-0.000514	0.000645	4.216E-06
549	SX	0.004955	0.002429	0.000081	0.000109	0.000058	0.000214
549	SY	0.004492	0.013516	0.000064	0.000106	0.000271	0.00081
549	WB	-2.159E-06	-2.009E-06	-4.952E-07	2.094E-07	1.668E-08	1.109E-07
550	DEAD	0.000039	-0.00002	-0.00181	-0.000771	0.000333	4.804E-06
550	LIVE	6.882E-06	-0.000037	-0.001501	-0.00066	0.000285	4.153E-06
550	SX	0.004955	0.002289	0.000082	0.000081	0.000027	0.000214
550	SY	0.004492	0.012818	0.000074	0.000084	0.00002	0.00081
550	WB	-2.159E-06	-1.909E-06	-5.213E-07	2.353E-07	4.739E-08	1.127E-07
551	DEAD	0.000039	-0.000015	-0.00189	-0.000783	-0.000141	4.781E-06
551	LIVE	6.931E-06	-0.000034	-0.001569	-0.000669	-0.000121	4.144E-06
551	SX	0.004955	0.002157	0.000039	9.970E-06	0.000055	0.000214
551	SY	0.004492	0.012124	0.000021	0.000016	0.000129	0.000811
551	WB	-2.158E-06	-1.809E-06	-5.842E-07	3.051E-07	9.868E-08	1.125E-07
552	DEAD	0.000039	-0.000011	-0.001583	-0.000691	-0.000469	4.690E-06
552	LIVE	6.982E-06	-0.00003	-0.001305	-0.000586	-0.000401	4.094E-06
552	SX	0.004956	0.002035	0.000025	0.000084	0.000035	0.000214
552	SY	0.004492	0.011433	0.000148	0.000046	0.000167	0.000811
552	WB	-2.158E-06	-1.707E-06	-6.975E-07	3.396E-07	1.418E-07	1.143E-07
553	DEAD	0.000039	-7.011E-06	-0.001108	-0.000558	-0.000451	4.399E-06
553	LIVE	7.038E-06	-0.000026	-0.000901	-0.000465	-0.000383	3.880E-06

Table 28: Joint Displacements

Joint	OutputCase	U1	U2	U3	R1	R2	R3
		m	m	m	Radians	Radians	Radians
553	SX	0.004956	0.001925	0.000049	0.00007	0.00003	0.000214
553	SY	0.004492	0.010747	0.000287	0.000037	0.000102	0.000812
553	WB	-2.158E-06	-1.603E-06	-8.256E-07	2.523E-07	1.074E-07	1.159E-07
554	DEAD	0.000039	-5.074E-06	-0.00092	-0.000516	-0.000238	5.019E-06
554	LIVE	7.065E-06	-0.000025	-0.000743	-0.000424	-0.000204	4.362E-06
554	SX	0.004956	0.001873	0.000059	3.507E-06	0.000026	0.000214
554	SY	0.004492	0.010395	0.000322	0.000018	0.000031	0.000811
554	WB	-2.157E-06	-1.548E-06	-8.649E-07	1.542E-07	5.185E-08	1.136E-07
555	DEAD	0.000039	-2.568E-06	-0.000885	-0.000471	-0.000029	5.477E-06
555	LIVE	7.092E-06	-0.000023	-0.000711	-0.000391	-0.000028	4.741E-06
555	SX	0.004956	0.001828	0.000053	0.000053	0.000023	0.000214
555	SY	0.004492	0.010067	0.000265	0.000117	0.000127	0.000812
555	WB	-2.157E-06	-1.498E-06	-8.710E-07	7.267E-08	2.700E-08	1.148E-07
556	DEAD	0.000039	2.282E-06	-0.000955	-0.000473	0.000076	5.118E-06
556	LIVE	7.151E-06	-0.000018	-0.000769	-0.0004	0.000067	4.446E-06
556	SX	0.004956	0.001746	0.000031	0.000053	0.000029	0.000214
556	SY	0.004492	0.009393	0.000143	0.000098	0.000093	0.000812
556	WB	-2.157E-06	-1.394E-06	-9.256E-07	-8.088E-08	1.675E-07	1.142E-07
557	DEAD	0.000039	6.748E-06	-0.000979	-0.000483	-0.000053	4.757E-06
557	LIVE	7.211E-06	-0.000014	-0.000795	-0.000413	-0.000037	4.154E-06
557	SX	0.004956	0.001683	0.000021	0.000021	0.00002	0.000214
557	SY	0.004492	0.008728	0.000113	0.000017	0.000019	0.000812
557	WB	-2.156E-06	-1.290E-06	-1.185E-06	-2.812E-07	3.811E-07	1.141E-07
558	DEAD	0.000039	0.000011	-0.000863	-0.000461	-0.000159	4.462E-06
558	LIVE	7.270E-06	-0.000011	-0.000707	-0.000395	-0.000123	3.903E-06
558	SX	0.004956	0.00164	0.000033	0.000056	0.000025	0.000214
558	SY	0.004492	0.008075	0.000165	0.000043	0.000072	0.000813
558	WB	-2.156E-06	-1.186E-06	-1.567E-06	-5.380E-07	3.445E-07	1.133E-07
559	DEAD	0.000039	0.000014	-0.000757	-0.000449	-0.000067	4.729E-06
559	LIVE	7.312E-06	-8.459E-06	-0.000624	-0.000383	-0.000052	4.105E-06
559	SX	0.004956	0.001623	0.000043	9.750E-06	0.000021	0.000214
559	SY	0.004492	0.007601	0.000208	0.000033	0.000019	0.000812
559	WB	-2.156E-06	-1.110E-06	-1.733E-06	-6.618E-07	9.720E-08	1.106E-07
560	DEAD	0.000039	0.000019	-0.0008	-0.000442	0.000038	4.794E-06
560	LIVE	7.376E-06	-3.851E-06	-0.00066	-0.000384	0.000032	4.123E-06
560	SX	0.004957	0.00162	0.000029	0.000035	0.000013	0.000214
560	SY	0.004492	0.006883	0.000114	0.000029	0.00007	0.000813
560	WB	-2.155E-06	-9.998E-07	-1.636E-06	-4.954E-07	-1.574E-07	1.071E-07
561	DEAD	0.000039	0.000023	-0.000795	-0.000439	-0.000052	4.452E-06
561	LIVE	7.434E-06	-3.120E-07	-0.000655	-0.000381	-0.000043	3.838E-06
561	SX	0.004957	0.001641	0.00003	0.000028	0.000021	0.000214
561	SY	0.004491	0.006284	0.000102	0.000032	0.000038	0.000812
561	WB	-2.155E-06	-9.043E-07	-1.496E-06	-3.581E-07	-1.249E-07	1.063E-07
562	DEAD	0.000039	0.000027	-0.000734	-0.000436	0.000043	4.580E-06
562	LIVE	7.498E-06	3.251E-06	-0.000605	-0.000372	0.000033	3.964E-06
562	SX	0.004957	0.001694	0.000064	8.185E-06	0.000029	0.000214
562	SY	0.004491	0.005634	0.000155	0.000028	0.000023	0.000811
562	WB	-2.155E-06	-7.945E-07	-1.362E-06	-3.323E-07	-2.473E-07	1.068E-07
563	DEAD	0.000039	0.000032	-0.000864	-0.000454	0.00013	4.738E-06
563	LIVE	7.561E-06	7.208E-06	-0.000708	-0.00039	0.000102	4.050E-06
563	SX	0.004957	0.001763	0.000067	0.000037	0.000018	0.000214
563	SY	0.004491	0.005095	0.000091	0.00005	0.00006	0.000812
563	WB	-2.154E-06	-7.017E-07	-1.005E-06	-7.250E-08	-4.749E-07	1.021E-07
564	DEAD	0.000039	0.000036	-0.000935	-0.000468	0.000012	4.468E-06

Table 28: Joint Displacements

Joint	OutputCase	U1	U2	U3	R1	R2	R3
		m	m	m	Radians	Radians	Radians
564	LIVE	7.623E-06	0.000011	-0.000762	-0.000399	6.493E-06	3.854E-06
564	SX	0.004958	0.001849	0.000064	0.000038	9.526E-06	0.000214
564	SY	0.004491	0.004635	0.000074	0.000023	0.000019	0.000811
564	WB	-2.154E-06	-6.107E-07	-5.357E-07	3.621E-07	-4.833E-07	1.038E-07
565	DEAD	0.00004	0.00004	-0.000902	-0.000477	-0.000023	4.217E-06
565	LIVE	7.685E-06	0.000014	-0.000733	-0.000401	-0.000015	3.673E-06
565	SX	0.004958	0.00195	0.000082	0.000105	0.000041	0.000214
565	SY	0.00449	0.004253	0.000121	0.000068	0.000069	0.00081
565	WB	-2.154E-06	-5.171E-07	-1.776E-07	7.460E-07	-2.522E-07	1.055E-07
566	DEAD	0.00004	0.000043	-0.000951	-0.00055	0.000282	4.382E-06
566	LIVE	7.741E-06	0.000017	-0.000782	-0.00046	0.000249	3.824E-06
566	SX	0.004958	0.002061	0.00012	0.000037	0.000012	0.000215
566	SY	0.00449	0.003981	0.000173	0.000018	0.000027	0.000808
566	WB	-2.153E-06	-4.247E-07	-8.451E-08	8.775E-07	-1.151E-08	1.059E-07
567	DEAD	0.00004	0.000048	-0.001428	-0.000677	0.000561	4.944E-06
567	LIVE	7.793E-06	0.000021	-0.001196	-0.000585	0.000488	4.298E-06
567	SX	0.004958	0.002193	0.000089	0.000062	0.000065	0.000215
567	SY	0.00449	0.003813	0.000112	0.000091	0.000079	0.000808
567	WB	-2.153E-06	-3.280E-07	-1.628E-07	6.091E-07	1.992E-07	1.048E-07
568	DEAD	0.00004	0.000053	-0.001892	-0.000802	0.000371	4.776E-06
568	LIVE	7.842E-06	0.000025	-0.001601	-0.000705	0.000326	4.174E-06
568	SX	0.004959	0.00233	0.000025	0.000049	0.000099	0.000215
568	SY	0.004489	0.003792	0.00005	0.00005	0.000073	0.000806
568	WB	-2.153E-06	-2.337E-07	-4.283E-07	2.681E-07	3.243E-07	1.053E-07
569	DEAD	0.00004	0.000057	-0.002055	-0.000857	-0.000051	4.614E-06
569	LIVE	7.887E-06	0.000029	-0.001745	-0.000757	-0.000044	4.055E-06
569	SX	0.004959	0.002476	0.000091	0.000025	0.000073	0.000216
569	SY	0.004489	0.003909	0.000073	0.000044	0.000051	0.000806
569	WB	-2.153E-06	-1.393E-07	-7.071E-07	3.578E-08	2.289E-07	1.057E-07
570	DEAD	0.00004	0.000061	-0.001789	-0.000793	-0.000531	4.611E-06
570	LIVE	7.925E-06	0.000032	-0.001513	-0.000698	-0.000465	4.063E-06
570	SX	0.004959	0.002629	0.000125	0.00009	0.000034	0.000216
570	SY	0.004489	0.004151	0.000095	0.000119	0.000056	0.000805
570	WB	-2.153E-06	-4.550E-08	-8.170E-07	-3.649E-09	2.473E-09	1.059E-07
571	DEAD	0.00004	0.000065	-0.001119	-0.000566	-0.000902	4.503E-06
571	LIVE	7.958E-06	0.000036	-0.000926	-0.000489	-0.000786	4.002E-06
571	SX	0.004959	0.002787	0.00009	0.000085	0.000151	0.000216
571	SY	0.004489	0.004499	0.000108	0.000111	0.000197	0.000804
571	WB	-2.153E-06	4.890E-08	-7.179E-07	8.614E-08	-1.888E-07	1.068E-07
572	DEAD	0.00004	0.000068	-0.000439	-0.000281	-0.001016	5.486E-06
572	LIVE	8.084E-06	0.000039	-0.000335	-0.000226	-0.000884	4.830E-06
572	SX	0.004961	0.002907	0.000146	0.000025	0.000192	0.000215
572	SY	0.00451	0.00481	0.000242	0.000022	0.000249	0.000804
572	WB	-2.150E-06	1.202E-07	-5.640E-07	1.757E-07	-2.426E-07	1.100E-07
573	DEAD	0.000039	-0.000029	-0.00046	-0.000253	0.000937	4.044E-06
573	LIVE	6.803E-06	-0.000045	-0.000349	-0.000197	0.000797	3.524E-06
573	SX	0.004955	0.002582	0.00008	0.000016	0.000101	0.000214
573	SY	0.004492	0.014244	0.000422	0.000075	0.000428	0.000809
573	WB	-2.160E-06	-2.113E-06	-4.876E-07	2.678E-07	5.607E-09	1.132E-07
574	DEAD	0.000011	-2.269E-07	-0.000249	0.00012	0.000219	4.629E-06
574	LIVE	-0.000017	-0.000021	-0.000284	0.00016	0.000263	4.134E-06
574	SX	0.004719	0.00181	0.000066	0.000113	0.00007	0.000214
574	SY	0.001543	0.009926	0.000038	0.00008	0.000134	0.000813
574	WB	-2.815E-06	-1.476E-06	-0.000011	5.628E-06	9.001E-06	1.237E-07

Table 28: Joint Displacements

Joint	OutputCase	U1	U2	U3	R1	R2	R3
		m	m	m	Radians	Radians	Radians
575	DEAD	0.000011	3.782E-06	-0.00043	0.00018	0.000165	4.777E-06
575	LIVE	-0.000017	-0.000017	-0.000512	0.000224	0.00021	4.250E-06
575	SX	0.004719	0.001733	0.00007	0.000079	0.000036	0.000214
575	SY	0.001543	0.009268	0.000033	0.000045	0.000025	0.000813
575	WB	-2.812E-06	-1.370E-06	-0.000019	6.877E-06	7.501E-06	1.228E-07
576	DEAD	0.000011	8.868E-06	-0.000532	0.000284	5.480E-06	4.718E-06
576	LIVE	-0.000017	-0.000013	-0.000642	0.00036	4.781E-06	4.139E-06
576	SX	0.004718	0.001665	3.876E-06	0.000025	0.000057	0.000214
576	SY	0.001543	0.008476	0.000017	0.000013	0.000023	0.000813
576	WB	-2.808E-06	-1.245E-06	-0.000024	0.000012	-1.167E-07	1.153E-07
577	DEAD	0.000012	0.000013	-0.000493	0.000414	-0.000043	4.736E-06
577	LIVE	-0.000017	-9.387E-06	-0.00059	0.00054	-0.000054	4.119E-06
577	SX	0.004717	0.001634	0.000028	0.000068	6.768E-06	0.000214
577	SY	0.001542	0.007917	0.000012	0.000033	7.418E-06	0.000814
577	WB	-2.805E-06	-1.158E-06	-0.000021	0.000019	-2.070E-06	1.115E-07
578	DEAD	0.000012	0.000017	-0.000485	0.000464	0.000053	4.674E-06
578	LIVE	-0.000017	-5.722E-06	-0.000587	0.000612	0.000088	4.042E-06
578	SX	0.004716	0.001617	8.570E-06	0.000019	9.771E-06	0.000214
578	SY	0.001542	0.00728	7.070E-06	9.193E-06	4.057E-06	0.000814
578	WB	-2.801E-06	-1.060E-06	-0.000022	0.000022	3.822E-06	1.078E-07
579	DEAD	0.000012	0.00002	-0.000558	0.000433	0.000109	4.719E-06
579	LIVE	-0.000017	-2.861E-06	-0.0007	0.000576	0.000168	4.098E-06
579	SX	0.004715	0.001621	0.000016	0.000034	0.000029	0.000214
579	SY	0.001542	0.006793	7.636E-06	0.000011	0.000011	0.000813
579	WB	-2.798E-06	-9.831E-07	-0.000026	0.000021	7.202E-06	1.103E-07
580	DEAD	0.000012	0.000025	-0.000667	0.000516	0.000087	4.725E-06
580	LIVE	-0.000016	1.668E-06	-0.000874	0.000707	0.00014	4.075E-06
580	SX	0.004714	0.001655	0.000061	0.000024	0.000024	0.000214
580	SY	0.001541	0.006085	0.00002	9.831E-06	8.882E-06	0.000813
580	WB	-2.793E-06	-8.605E-07	-0.000034	0.000027	6.199E-06	1.086E-07
581	DEAD	0.000012	0.000029	-0.000727	0.000771	0.00012	4.716E-06
581	LIVE	-0.000016	4.700E-06	-0.00097	0.001088	0.00018	4.049E-06
581	SX	0.004713	0.001693	0.000066	0.000151	0.000022	0.000213
581	SY	0.001541	0.00563	0.000021	0.000051	6.812E-06	0.000813
581	WB	-2.791E-06	-7.790E-07	-0.000038	0.000043	7.795E-06	1.074E-07
582	DEAD	0.000012	0.000033	-0.000861	0.000969	0.000076	4.630E-06
582	LIVE	-0.000016	8.468E-06	-0.001166	0.001408	0.000113	3.965E-06
582	SX	0.004711	0.001761	0.000112	0.000243	0.00008	0.000213
582	SY	0.00154	0.005088	0.000036	0.000084	0.000028	0.000813
582	WB	-2.788E-06	-6.784E-07	-0.000047	0.000057	5.096E-06	1.049E-07
583	DEAD	0.000012	0.000037	-0.000839	0.000896	-0.000143	4.530E-06
583	LIVE	-0.000016	0.000012	-0.001138	0.001329	-0.000199	3.874E-06
583	SX	0.00471	0.001845	0.000202	0.000192	0.000089	0.000213
583	SY	0.001539	0.004626	0.000068	0.000069	0.000033	0.000812
583	WB	-2.785E-06	-5.847E-07	-0.000046	0.000054	-7.531E-06	1.019E-07
584	DEAD	0.000013	0.000041	-0.000613	0.000571	-0.000309	4.504E-06
584	LIVE	-0.000016	0.000015	-0.000822	0.000862	-0.000431	3.856E-06
584	SX	0.004709	0.001945	0.000255	0.000103	0.000017	0.000213
584	SY	0.001539	0.004242	0.000089	0.000048	0.000032	0.000811
584	WB	-2.783E-06	-4.939E-07	-0.000034	0.000035	-0.000017	1.012E-07
585	DEAD	0.000013	0.000047	-0.00016	0.000023	-0.000374	4.435E-06
585	LIVE	-0.000016	0.000021	-0.000198	0.000044	-0.000509	3.774E-06
585	SX	0.004707	0.002109	0.000176	0.000138	0.000099	0.000214
585	SY	0.001538	0.003873	0.000103	0.000066	0.000071	0.000804

Table 28: Joint Displacements

Joint	OutputCase	U1	U2	U3	R1	R2	R3
		m	m	m	Radians	Radians	Radians
585	WB	-2.781E-06	-3.563E-07	-9.026E-06	2.407E-06	-0.00002	9.058E-08
586	DEAD	0.000011	-3.562E-06	-0.000085	0.000021	0.000223	4.992E-06
586	LIVE	-0.000017	-0.000024	-0.000097	0.000042	0.000253	4.579E-06
586	SX	0.004719	0.001885	0.000035	0.000014	0.000129	0.000214
586	SY	0.001543	0.010482	0.000172	0.00008	0.000204	0.000812
586	WB	-2.817E-06	-1.565E-06	-4.834E-06	2.289E-06	8.284E-06	1.408E-07
589	DEAD	-5.896E-07	0.000065	-0.000291	0.00006	-0.000209	4.545E-06
589	LIVE	-0.000027	0.000036	-0.000189	0.000037	-0.000148	3.963E-06
589	SX	0.004659	0.002792	8.893E-06	0.000105	0.000078	0.000218
589	SY	0.003343	0.004502	0.000034	0.000098	0.000087	0.000799
589	WB	-3.052E-06	3.758E-08	3.598E-07	-1.451E-07	3.379E-07	9.881E-08
590	DEAD	-6.482E-07	0.000061	-0.000432	0.000054	-0.000082	4.400E-06
590	LIVE	-0.000027	0.000032	-0.000287	0.000028	-0.000052	3.837E-06
590	SX	0.004659	0.002631	0.000114	0.00011	0.000169	0.000218
590	SY	0.003347	0.004152	0.000055	0.000096	0.000081	0.0008
590	WB	-3.052E-06	-5.061E-08	6.748E-07	-2.170E-07	3.214E-07	9.852E-08
591	DEAD	-7.123E-07	0.000057	-0.000431	0.00003	0.000082	4.502E-06
591	LIVE	-0.000027	0.000029	-0.000277	7.845E-06	0.000073	3.935E-06
591	SX	0.004659	0.002474	0.000281	0.000081	0.000144	0.000218
591	SY	0.003351	0.003905	0.000112	0.000054	0.000095	0.000799
591	WB	-3.052E-06	-1.394E-07	8.979E-07	-2.074E-07	9.274E-08	9.891E-08
592	DEAD	-7.790E-07	0.000053	-0.000295	6.633E-07	0.000182	4.519E-06
592	LIVE	-0.000027	0.000025	-0.000166	-0.000011	0.000141	3.926E-06
592	SX	0.004658	0.002324	0.000326	0.000033	0.000118	0.000218
592	SY	0.003354	0.003781	0.000152	0.000021	0.000039	0.000799
592	WB	-3.053E-06	-2.273E-07	7.849E-07	-1.049E-07	-4.406E-07	9.730E-08
593	DEAD	-7.529E-07	0.000053	-0.000295	1.262E-06	0.000188	4.526E-06
593	LIVE	-0.000027	0.000025	-0.000165	-9.927E-06	0.000154	3.932E-06
593	SX	0.004658	0.002324	0.000326	0.000033	0.000117	0.000218
593	SY	0.00335	0.003781	0.000152	0.000021	0.000039	0.000799
593	WB	-3.052E-06	-2.274E-07	7.853E-07	-1.049E-07	-4.407E-07	9.722E-08
594	DEAD	-6.861E-07	0.000057	-0.000432	0.000031	0.000091	4.508E-06
594	LIVE	-0.000027	0.000029	-0.000277	9.545E-06	0.000092	3.939E-06
594	SX	0.004659	0.002474	0.000281	0.00008	0.000155	0.000218
594	SY	0.003346	0.003905	0.000113	0.000054	0.000102	0.000799
594	WB	-3.052E-06	-1.394E-07	8.991E-07	-2.069E-07	9.813E-08	9.878E-08
595	DEAD	-6.226E-07	0.000061	-0.000433	0.000054	-0.000082	4.405E-06
595	LIVE	-0.000027	0.000032	-0.000287	0.000029	-0.000044	3.841E-06
595	SX	0.004659	0.002631	0.000115	0.000109	0.00019	0.000218
595	SY	0.003343	0.004152	0.000055	0.000095	0.000093	0.0008
595	WB	-3.052E-06	-5.063E-08	6.761E-07	-2.154E-07	3.414E-07	9.840E-08
598	DEAD	3.820E-06	0.000065	-0.000324	0.000012	-0.00023	4.835E-06
598	LIVE	-0.000023	0.000036	-0.000221	0.000029	-0.000169	4.165E-06
598	SX	0.004655	0.002792	0.000015	0.000062	0.000075	0.000218
598	SY	0.002691	0.004502	6.494E-06	0.00002	0.000027	0.000797
598	WB	-2.963E-06	3.818E-08	4.000E-07	5.648E-08	4.435E-07	9.350E-08
599	DEAD	3.774E-06	0.000061	-0.000481	0.000049	-0.000087	4.877E-06
599	LIVE	-0.000023	0.000032	-0.000334	0.000063	-0.000056	4.218E-06
599	SX	0.004655	0.002631	0.000153	0.000015	0.000195	0.000218
599	SY	0.002694	0.004152	0.000056	0.000028	0.000083	0.000797
599	WB	-2.964E-06	-5.039E-08	8.236E-07	-1.086E-07	4.127E-07	9.456E-08
600	DEAD	3.725E-06	0.000057	-0.000471	0.000047	0.000107	4.683E-06
600	LIVE	-0.000024	0.000029	-0.000314	0.000059	0.000095	4.045E-06
600	SX	0.004655	0.002474	0.000334	0.000041	0.000136	0.000218

Table 28: Joint Displacements

Joint	OutputCase	U1	U2	U3	R1	R2	R3
		m	m	m	Radians	Radians	Radians
600	SY	0.002698	0.003905	0.000137	0.000029	0.000068	0.000798
600	WB	-2.964E-06	-1.394E-07	1.085E-06	-2.009E-07	6.788E-08	9.418E-08
601	DEAD	3.675E-06	0.000053	-0.000304	0.000014	0.000213	4.564E-06
601	LIVE	-0.000024	0.000025	-0.000176	0.000025	0.000169	3.964E-06
601	SX	0.004654	0.002324	0.000353	0.000027	0.000168	0.000219
601	SY	0.002702	0.003781	0.000154	0.00002	0.000066	0.000795
601	WB	-2.965E-06	-2.288E-07	8.855E-07	-1.194E-07	-6.018E-07	9.362E-08
602	DEAD	3.701E-06	0.000053	-0.000304	0.000014	0.000215	4.569E-06
602	LIVE	-0.000024	0.000025	-0.000176	0.000025	0.000175	3.968E-06
602	SX	0.004654	0.002324	0.000353	0.000027	0.000166	0.000219
602	SY	0.002698	0.003781	0.000154	0.00002	0.000064	0.000795
602	WB	-2.964E-06	-2.288E-07	8.859E-07	-1.203E-07	-6.118E-07	9.339E-08
603	DEAD	3.752E-06	0.000057	-0.000471	0.000047	0.000109	4.692E-06
603	LIVE	-0.000023	0.000029	-0.000315	0.00006	0.000103	4.051E-06
603	SX	0.004655	0.002474	0.000334	0.00004	0.000145	0.000218
603	SY	0.002694	0.003905	0.000137	0.000029	0.000075	0.000797
603	WB	-2.964E-06	-1.395E-07	1.087E-06	-2.012E-07	6.552E-08	9.388E-08
604	DEAD	3.803E-06	0.000061	-0.000482	0.000049	-0.000088	4.894E-06
604	LIVE	-0.000023	0.000032	-0.000334	0.000063	-0.000053	4.232E-06
604	SX	0.004655	0.002631	0.000153	0.000015	0.000209	0.000218
604	SY	0.00269	0.004152	0.000056	0.000028	0.000092	0.000796
604	WB	-2.963E-06	-5.041E-08	8.243E-07	-1.073E-07	4.285E-07	9.431E-08
605	DEAD	3.625E-06	0.000049	-0.000131	-0.00001	0.000077	4.589E-06
605	LIVE	-0.000024	0.000022	-0.000044	-4.072E-06	0.000048	3.986E-06
605	SX	0.004654	0.002179	0.000022	0.000036	0.000723	0.000219
605	SY	0.002705	0.003789	0.000027	0.000026	0.000324	0.000794
605	WB	-2.965E-06	-3.144E-07	-6.845E-08	1.169E-07	-1.634E-06	9.144E-08
606	DEAD	-8.520E-07	0.000049	-0.00013	5.769E-08	0.000079	4.875E-06
606	LIVE	-0.000027	0.000022	-0.000043	-2.154E-06	0.000051	4.222E-06
606	SX	0.004658	0.002168	0.000038	0.000044	0.000696	0.000218
606	SY	0.003359	0.003796	0.000042	0.000031	0.000343	0.000797
606	WB	-3.053E-06	-3.212E-07	-5.926E-08	1.262E-07	-1.411E-06	9.508E-08
607	DEAD	0.000017	0.000053	-0.000391	0.000391	0.00042	4.335E-06
607	LIVE	-0.000012	0.000025	-0.000283	0.000377	0.000346	3.698E-06
607	SX	0.004714	0.002325	0.000332	0.000076	0.000129	0.000214
607	SY	0.001491	0.003782	0.000113	0.000049	0.000054	0.000799
607	WB	-2.694E-06	-2.294E-07	9.195E-07	1.219E-06	-3.557E-07	9.479E-08
608	DEAD	0.000017	0.000057	-0.000692	0.000386	0.000173	4.876E-06
608	LIVE	-0.000012	0.000029	-0.000531	0.000371	0.000143	4.255E-06
608	SX	0.004714	0.002475	0.000254	0.000143	0.000183	0.000217
608	SY	0.001492	0.003906	0.000101	0.00005	0.000059	0.000805
608	WB	-2.694E-06	-1.386E-07	8.003E-07	9.079E-07	2.938E-07	1.034E-07
609	DEAD	0.000017	0.000061	-0.000687	0.000264	-0.00016	4.892E-06
609	LIVE	-0.000012	0.000033	-0.000528	0.00026	-0.000132	4.247E-06
609	SX	0.004714	0.00263	0.000063	0.000141	0.000175	0.000216
609	SY	0.001492	0.004151	0.000067	0.000045	0.000057	0.000804
609	WB	-2.693E-06	-4.819E-08	5.015E-07	5.101E-07	3.225E-07	1.018E-07
610	DEAD	0.000017	0.000065	-0.00043	0.000086	-0.000351	5.062E-06
610	LIVE	-0.000012	0.000036	-0.000317	0.000095	-0.000284	4.407E-06
610	SX	0.004714	0.00279	0.000037	0.000111	0.00004	0.000216
610	SY	0.001492	0.0045	0.000037	0.000041	0.000068	0.000803
610	WB	-2.692E-06	4.227E-08	2.353E-07	2.038E-07	2.639E-07	1.022E-07
611	DEAD	0.000017	0.000069	-0.000111	0.000012	-0.000392	6.176E-06
611	LIVE	-0.000012	0.00004	-0.000061	0.000016	-0.000313	5.343E-06

Table 28: Joint Displacements

Joint	OutputCase	U1	U2	U3	R1	R2	R3
		m	m	m	Radians	Radians	Radians
611	SX	0.004715	0.002941	0.000035	0.00003	0.000082	0.000214
611	SY	0.001492	0.004894	0.000058	0.000045	0.000101	0.000809
611	WB	-2.692E-06	1.254E-07	3.780E-08	-4.961E-08	2.324E-07	1.063E-07
612	DEAD	0.000012	0.000053	-0.00025	-8.468E-06	0.000235	4.246E-06
612	LIVE	-0.000016	0.000025	-0.00014	-4.993E-06	0.000183	3.687E-06
612	SX	0.004692	0.002324	0.000372	0.000015	0.000198	0.000218
612	SY	0.001613	0.003782	0.000138	0.00003	0.000078	0.000796
612	WB	-2.790E-06	-2.298E-07	1.309E-06	-9.065E-08	-8.721E-07	9.238E-08
613	DEAD	0.000012	0.000057	-0.000472	0.000052	0.00017	4.205E-06
613	LIVE	-0.000016	0.000029	-0.000323	0.000041	0.000147	3.634E-06
613	SX	0.004692	0.002474	0.000351	0.000041	0.000153	0.000218
613	SY	0.001613	0.003905	0.000135	0.000022	0.000053	0.000798
613	WB	-2.790E-06	-1.390E-07	1.402E-06	1.758E-07	3.176E-07	9.213E-08
614	DEAD	0.000012	0.000061	-0.000525	0.000057	-0.000064	4.230E-06
614	LIVE	-0.000016	0.000032	-0.000377	0.000038	-0.000041	3.677E-06
614	SX	0.004692	0.00263	0.000149	0.000021	0.000212	0.000218
614	SY	0.001613	0.004152	0.000064	0.000022	0.000078	0.000797
614	WB	-2.790E-06	-4.918E-08	8.965E-07	1.619E-07	6.204E-07	9.277E-08
615	DEAD	0.000012	0.000065	-0.000363	0.000048	-0.000258	4.305E-06
615	LIVE	-0.000016	0.000036	-0.000256	0.000028	-0.000198	3.734E-06
615	SX	0.004692	0.002791	8.969E-06	0.000043	0.000082	0.000217
615	SY	0.001613	0.004501	0.000016	0.000034	0.000035	0.000798
615	WB	-2.790E-06	4.054E-08	3.569E-07	1.427E-09	5.215E-07	9.298E-08
616	DEAD	0.000012	0.000069	-0.000108	6.760E-06	-0.000319	3.341E-06
616	LIVE	-0.000016	0.00004	-0.000059	2.980E-07	-0.000246	2.911E-06
616	SX	0.004692	0.002942	0.000028	0.000032	0.000027	0.000218
616	SY	0.001613	0.004894	0.000047	0.000052	0.000044	0.000791
616	WB	-2.790E-06	1.217E-07	-1.409E-08	-1.123E-08	4.310E-07	8.410E-08
617	DEAD	0.000012	0.000049	-0.000101	-0.000025	0.00006	4.238E-06
617	LIVE	-0.000016	0.000022	-0.000034	-9.472E-06	0.000022	3.597E-06
617	SX	0.004693	0.002192	5.553E-06	0.000013	0.000778	0.000217
617	SY	0.001613	0.003786	0.000011	0.00002	0.000284	0.000798
617	WB	-2.790E-06	-3.084E-07	-1.263E-07	4.783E-08	-2.740E-06	8.414E-08
618	DEAD	-5.944E-07	0.000069	-0.000093	0.000026	-0.00025	3.774E-06
618	LIVE	-0.000027	0.000039	-0.000048	0.000017	-0.000177	3.354E-06
618	SX	0.00466	0.002943	0.000053	7.568E-06	0.000078	0.000218
618	SY	0.003347	0.004889	0.000089	7.680E-06	0.000146	0.000799
618	WB	-3.052E-06	1.170E-07	1.004E-07	2.813E-08	3.135E-07	9.904E-08
619	DEAD	3.805E-06	0.000069	-0.000107	3.647E-06	-0.000272	5.458E-06
619	LIVE	-0.000023	0.00004	-0.00006	6.988E-06	-0.000201	4.647E-06
619	SX	0.004656	0.002943	9.380E-06	0.000036	9.771E-06	0.000218
619	SY	0.002695	0.004892	3.029E-06	0.000051	0.000011	0.000794
619	WB	-2.964E-06	1.175E-07	7.016E-08	3.793E-08	3.919E-07	9.010E-08

Table 29: Joint Reactions

Table 29: Joint Reactions

Joint	OutputCase	F1	F2	F3	M1	M2	M3
		Kgf	Kgf	Kgf	Kgf-m	Kgf-m	Kgf-m
1	DEAD	40.59	-36.78	5784.39	0.	0.	0.
1	LIVE	35.99	-27.8	2943.88	0.	0.	0.
1	SX	397.34	102.09	1639.09	0.	0.	0.

Table 29: Joint Reactions

Joint	OutputCase	F1	F2	F3	M1	M2	M3
		Kgf	Kgf	Kgf	Kgf-m	Kgf-m	Kgf-m
1	SY	341.95	561.98	1472.58	0.	0.	0.
1	WB	0.3	1.368E-02	-0.27	0.	0.	0.
3	DEAD	47.28	35.56	6157.	0.	0.	0.
3	LIVE	42.68	27.2	3319.04	0.	0.	0.
3	SX	395.43	101.29	2010.13	0.	0.	0.
3	SY	125.44	559.63	2298.8	0.	0.	0.
3	WB	0.16	-8.650E-03	11.59	0.	0.	0.
5	DEAD	81.36	-47.03	6968.79	0.	0.	0.
5	LIVE	72.69	-35.03	4008.72	0.	0.	0.
5	SX	361.48	99.34	849.95	0.	0.	0.
5	SY	135.1	548.38	1854.71	0.	0.	0.
5	WB	5.191E-02	0.14	0.86	0.	0.	0.
7	DEAD	80.17	46.54	7934.65	0.	0.	0.
7	LIVE	69.46	36.46	5504.47	0.	0.	0.
7	SX	391.58	99.6	1214.89	0.	0.	0.
7	SY	478.39	553.59	1291.72	0.	0.	0.
7	WB	0.17	3.425E-02	60.65	0.	0.	0.
9	DEAD	-42.67	96.2	12369.36	0.	0.	0.
9	LIVE	-33.19	78.68	9445.9	0.	0.	0.
9	SX	522.06	70.8	605.95	0.	0.	0.
9	SY	603.72	401.8	992.44	0.	0.	0.
9	WB	0.21	2.083E-02	82.01	0.	0.	0.
11	DEAD	-6.82	-64.28	13591.29	0.	0.	0.
11	LIVE	8.3	-46.34	11072.94	0.	0.	0.
11	SX	496.52	89.96	607.91	0.	0.	0.
11	SY	239.65	509.53	2938.75	0.	0.	0.
11	WB	1.66	0.57	149.91	0.	0.	0.
13	DEAD	-46.69	-9.	8801.19	0.	0.	0.
13	LIVE	-36.49	-7.79	6162.26	0.	0.	0.
13	SX	396.51	90.38	1335.16	0.	0.	0.
13	SY	125.3	526.59	485.74	0.	0.	0.
13	WB	0.34	0.16	71.78	0.	0.	0.
15	DEAD	40.85	-4.81	4508.53	0.	0.	0.
15	LIVE	54.87	-9.14	3303.45	0.	0.	0.
15	SX	410.36	75.58	1437.45	0.	0.	0.
15	SY	163.62	430.61	2386.43	0.	0.	0.
15	WB	2.46	-0.57	137.19	0.	0.	0.
17	DEAD	-39.48	-32.89	5615.2	0.	0.	0.
17	LIVE	-29.88	-27.21	2861.56	0.	0.	0.
17	SX	396.64	75.61	2069.08	0.	0.	0.
17	SY	333.53	428.58	2643.6	0.	0.	0.
17	WB	0.28	-0.2	1.79	0.	0.	0.
19	DEAD	-21.5	-2.13	6106.02	0.	0.	0.
19	LIVE	-21.85	-2.51	5003.58	0.	0.	0.
19	SX	570.09	27.08	1189.13	0.	0.	0.
19	SY	227.58	145.93	407.64	0.	0.	0.
19	WB	-0.61	-0.11	187.92	0.	0.	0.
21	DEAD	-4.71	-2.93	5925.91	0.	0.	0.
21	LIVE	-6.46	-3.62	4741.51	0.	0.	0.
21	SX	563.27	24.2	1266.25	0.	0.	0.
21	SY	223.47	107.38	468.62	0.	0.	0.
21	WB	3.453E-02	-0.15	176.79	0.	0.	0.
23	DEAD	-30.27	-76.32	10467.11	0.	0.	0.
23	LIVE	-42.24	-63.14	8532.43	0.	0.	0.

Table 29: Joint Reactions

Joint	OutputCase	F1	F2	F3	M1	M2	M3
		Kgf	Kgf	Kgf	Kgf-m	Kgf-m	Kgf-m
23	SX	517.19	57.56	643.89	0.	0.	0.
23	SY	211.52	210.01	875.79	0.	0.	0.
23	WB	-1.61	-7.248E-02	141.54	0.	0.	0.
25	DEAD	-22.54	-79.66	11173.4	0.	0.	0.
25	LIVE	-18.54	-66.42	9274.2	0.	0.	0.
25	SX	516.87	58.02	528.65	0.	0.	0.
25	SY	209.83	295.07	1209.57	0.	0.	0.
25	WB	-3.346E-02	-0.16	159.04	0.	0.	0.
27	DEAD	-18.23	79.24	9549.5	0.	0.	0.
27	LIVE	-11.99	67.21	7022.16	0.	0.	0.
27	SX	550.23	58.82	859.07	0.	0.	0.
27	SY	629.92	293.58	876.01	0.	0.	0.
27	WB	0.25	0.2	69.42	0.	0.	0.
29	DEAD	4.58	76.31	9251.97	0.	0.	0.
29	LIVE	7.12	64.77	6785.4	0.	0.	0.
29	SX	553.84	56.73	453.81	0.	0.	0.
29	SY	634.43	211.16	1209.2	0.	0.	0.
29	WB	0.27	0.14	67.36	0.	0.	0.
31	DEAD	42.07	99.5	12030.78	0.	0.	0.
31	LIVE	38.76	83.08	9258.1	0.	0.	0.
31	SX	527.39	63.1	573.1	0.	0.	0.
31	SY	603.34	130.22	918.92	0.	0.	0.
31	WB	0.26	-0.11	78.26	0.	0.	0.
33	DEAD	-91.57	42.51	8003.91	0.	0.	0.
33	LIVE	-74.48	33.32	5520.26	0.	0.	0.
33	SX	395.3	95.59	844.49	0.	0.	0.
33	SY	467.56	159.44	834.	0.	0.	0.
33	WB	0.26	-6.272E-02	55.35	0.	0.	0.
35	DEAD	-177.06	-30.17	10847.81	0.	0.	0.
35	LIVE	-152.25	-24.65	7273.37	0.	0.	0.
35	SX	384.05	129.61	1185.17	0.	0.	0.
35	SY	157.92	217.52	501.39	0.	0.	0.
35	WB	0.18	-1.447E-02	-5.46	0.	0.	0.
37	DEAD	-84.73	-2.81	7179.01	0.	0.	0.
37	LIVE	-66.	-1.4	4087.51	0.	0.	0.
37	SX	415.9	136.61	1852.09	0.	0.	0.
37	SY	195.2	229.42	1159.31	0.	0.	0.
37	WB	0.39	-3.011E-02	-1.52	0.	0.	0.
39	DEAD	-60.13	-8.37	4855.29	0.	0.	0.
39	LIVE	-45.55	-4.81	2171.89	0.	0.	0.
39	SX	373.16	107.09	1945.83	0.	0.	0.
39	SY	346.63	184.65	1701.41	0.	0.	0.
39	WB	0.34	-1.533E-02	-8.91	0.	0.	0.
41	DEAD	101.58	-62.65	16339.39	0.	0.	0.
41	LIVE	96.68	-39.64	13675.08	0.	0.	0.
41	SX	482.19	116.16	981.53	0.	0.	0.
41	SY	198.61	183.02	954.97	0.	0.	0.
41	WB	0.68	1.29	156.06	0.	0.	0.
43	DEAD	-27.2	-16.86	5205.22	0.	0.	0.
43	LIVE	-25.93	-26.41	3986.5	0.	0.	0.
43	SX	399.04	67.71	1384.69	0.	0.	0.
43	SY	163.68	132.36	1493.65	0.	0.	0.
43	WB	-0.78	-1.36	149.43	0.	0.	0.
45	DEAD	59.9	27.86	5491.17	-13.07	81.05	-5.55

Table 29: Joint Reactions

Joint	OutputCase	F1	F2	F3	M1	M2	M3
		Kgf	Kgf	Kgf	Kgf-m	Kgf-m	Kgf-m
45	LIVE	4.81	6.94	1381.61	2.84	13.7	-4.63
45	SX	2061.05	1614.5	2239.38	3837.2	6069.47	249.42
45	SY	854.31	2788.34	4067.19	6627.75	2254.91	944.02
45	WB	-4.15	0.22	13.45	-0.53	-4.81	-0.11
47	DEAD	117.72	-7.97	12075.47	42.39	177.57	-4.91
47	LIVE	85.66	-6.01	3913.52	22.89	144.84	-4.28
47	SX	2184.34	1621.88	927.85	3847.77	6226.43	261.
47	SY	1050.49	2817.46	718.31	6671.36	2913.27	931.03
47	WB	-1.18	5.605E-02	4.29	-0.27	-7.791E-02	-0.1
49	DEAD	57.49	-19.05	7592.49	41.66	90.78	-2.4
49	LIVE	47.82	-5.72	2381.88	14.21	82.23	-2.08
49	SX	967.24	653.45	2931.35	1554.51	2669.9	105.61
49	SY	1007.62	1164.55	3698.64	2760.85	2575.69	386.77
49	WB	9.437E-02	1.001E-02	1.75	-9.753E-02	0.93	-4.695E-02

9. Frame results

This section provides frame force results.

Table 30: Element Forces - Frames, Part 1 of 2

Table 30: Element Forces - Frames, Part 1 of 2

Frame	Station	OutputCase	P	V2	V3
	m		Kgf	Kgf	Kgf
1	0.	DEAD	-5784.39	-40.59	36.78
1	2.35	DEAD	-5413.11	-40.59	36.78
1	4.7	DEAD	-5041.82	-40.59	36.78
1	0.	LIVE	-2943.88	-35.99	27.8
1	2.35	LIVE	-2943.88	-35.99	27.8
1	4.7	LIVE	-2943.88	-35.99	27.8
1	0.	SX	1639.09	397.34	102.09
1	2.35	SX	1639.09	397.34	102.09
1	4.7	SX	1639.09	397.34	102.09
1	0.	SY	1472.58	341.95	561.98
1	2.35	SY	1472.58	341.95	561.98
1	4.7	SY	1472.58	341.95	561.98
1	0.	WB	0.27	-0.3	-1.368E-02
1	2.35	WB	0.27	-0.3	-1.368E-02
1	4.7	WB	0.27	-0.3	-1.368E-02
2	0.	DEAD	-6157.	-47.28	-35.56
2	2.35	DEAD	-5785.71	-47.28	-35.56
2	4.7	DEAD	-5414.43	-47.28	-35.56
2	0.	LIVE	-3319.04	-42.68	-27.2
2	2.35	LIVE	-3319.04	-42.68	-27.2
2	4.7	LIVE	-3319.04	-42.68	-27.2
2	0.	SX	2010.13	395.43	101.29
2	2.35	SX	2010.13	395.43	101.29
2	4.7	SX	2010.13	395.43	101.29
2	0.	SY	2298.8	125.44	559.63
2	2.35	SY	2298.8	125.44	559.63
2	4.7	SY	2298.8	125.44	559.63

Table 30: Element Forces - Frames, Part 1 of 2

Frame	Station	OutputCase	P	V2	V3
	m		Kgf	Kgf	Kgf
2	0.	WB	-11.59	-0.16	8.650E-03
2	2.35	WB	-11.59	-0.16	8.650E-03
2	4.7	WB	-11.59	-0.16	8.650E-03
3	0.	DEAD	-6968.79	-81.36	47.03
3	2.35	DEAD	-6597.5	-81.36	47.03
3	4.7	DEAD	-6226.22	-81.36	47.03
3	0.	LIVE	-4008.72	-72.69	35.03
3	2.35	LIVE	-4008.72	-72.69	35.03
3	4.7	LIVE	-4008.72	-72.69	35.03
3	0.	SX	849.95	361.48	99.34
3	2.35	SX	849.95	361.48	99.34
3	4.7	SX	849.95	361.48	99.34
3	0.	SY	1854.71	135.1	548.38
3	2.35	SY	1854.71	135.1	548.38
3	4.7	SY	1854.71	135.1	548.38
3	0.	WB	-0.86	-5.191E-02	-0.14
3	2.35	WB	-0.86	-5.191E-02	-0.14
3	4.7	WB	-0.86	-5.191E-02	-0.14
4	0.	DEAD	-7934.65	-80.17	-46.54
4	2.35	DEAD	-7563.36	-80.17	-46.54
4	4.7	DEAD	-7192.08	-80.17	-46.54
4	0.	LIVE	-5504.47	-69.46	-36.46
4	2.35	LIVE	-5504.47	-69.46	-36.46
4	4.7	LIVE	-5504.47	-69.46	-36.46
4	0.	SX	1214.89	391.58	99.6
4	2.35	SX	1214.89	391.58	99.6
4	4.7	SX	1214.89	391.58	99.6
4	0.	SY	1291.72	478.39	553.59
4	2.35	SY	1291.72	478.39	553.59
4	4.7	SY	1291.72	478.39	553.59
4	0.	WB	-60.65	-0.17	-3.425E-02
4	2.35	WB	-60.65	-0.17	-3.425E-02
4	4.7	WB	-60.65	-0.17	-3.425E-02
5	0.	DEAD	-12369.36	42.67	-96.2
5	2.35	DEAD	-11998.08	42.67	-96.2
5	4.7	DEAD	-11626.79	42.67	-96.2
5	0.	LIVE	-9445.9	33.19	-78.68
5	2.35	LIVE	-9445.9	33.19	-78.68
5	4.7	LIVE	-9445.9	33.19	-78.68
5	0.	SX	605.95	522.06	70.8
5	2.35	SX	605.95	522.06	70.8
5	4.7	SX	605.95	522.06	70.8
5	0.	SY	992.44	603.72	401.8
5	2.35	SY	992.44	603.72	401.8
5	4.7	SY	992.44	603.72	401.8
5	0.	WB	-82.01	-0.21	-2.083E-02
5	2.35	WB	-82.01	-0.21	-2.083E-02
5	4.7	WB	-82.01	-0.21	-2.083E-02
6	0.	DEAD	-13591.29	6.82	64.28
6	2.35	DEAD	-13220.	6.82	64.28
6	4.7	DEAD	-12848.72	6.82	64.28
6	0.	LIVE	-11072.94	-8.3	46.34
6	2.35	LIVE	-11072.94	-8.3	46.34
6	4.7	LIVE	-11072.94	-8.3	46.34

Table 30: Element Forces - Frames, Part 1 of 2

Frame	Station	OutputCase	P	V2	V3
	m		Kgf	Kgf	Kgf
6	0.	SX	607.91	496.52	89.96
6	2.35	SX	607.91	496.52	89.96
6	4.7	SX	607.91	496.52	89.96
6	0.	SY	2938.75	239.65	509.53
6	2.35	SY	2938.75	239.65	509.53
6	4.7	SY	2938.75	239.65	509.53
6	0.	WB	-149.91	-1.66	-0.57
6	2.35	WB	-149.91	-1.66	-0.57
6	4.7	WB	-149.91	-1.66	-0.57
7	0.	DEAD	-8801.19	46.69	9.
7	2.35	DEAD	-8429.9	46.69	9.
7	4.7	DEAD	-8058.62	46.69	9.
7	0.	LIVE	-6162.26	36.49	7.79
7	2.35	LIVE	-6162.26	36.49	7.79
7	4.7	LIVE	-6162.26	36.49	7.79
7	0.	SX	1335.16	396.51	90.38
7	2.35	SX	1335.16	396.51	90.38
7	4.7	SX	1335.16	396.51	90.38
7	0.	SY	485.74	125.3	526.59
7	2.35	SY	485.74	125.3	526.59
7	4.7	SY	485.74	125.3	526.59
7	0.	WB	-71.78	-0.34	-0.16
7	2.35	WB	-71.78	-0.34	-0.16
7	4.7	WB	-71.78	-0.34	-0.16
8	0.	DEAD	-4508.53	-40.85	4.81
8	2.35	DEAD	-4137.25	-40.85	4.81
8	4.7	DEAD	-3765.96	-40.85	4.81
8	0.	LIVE	-3303.45	-54.87	9.14
8	2.35	LIVE	-3303.45	-54.87	9.14
8	4.7	LIVE	-3303.45	-54.87	9.14
8	0.	SX	1437.45	410.36	75.58
8	2.35	SX	1437.45	410.36	75.58
8	4.7	SX	1437.45	410.36	75.58
8	0.	SY	2386.43	163.62	430.61
8	2.35	SY	2386.43	163.62	430.61
8	4.7	SY	2386.43	163.62	430.61
8	0.	WB	-137.19	-2.46	0.57
8	2.35	WB	-137.19	-2.46	0.57
8	4.7	WB	-137.19	-2.46	0.57
9	0.	DEAD	-5615.2	39.48	32.89
9	2.35	DEAD	-5243.91	39.48	32.89
9	4.7	DEAD	-4872.63	39.48	32.89
9	0.	LIVE	-2861.56	29.88	27.21
9	2.35	LIVE	-2861.56	29.88	27.21
9	4.7	LIVE	-2861.56	29.88	27.21
9	0.	SX	2069.08	396.64	75.61
9	2.35	SX	2069.08	396.64	75.61
9	4.7	SX	2069.08	396.64	75.61
9	0.	SY	2643.6	333.53	428.58
9	2.35	SY	2643.6	333.53	428.58
9	4.7	SY	2643.6	333.53	428.58
9	0.	WB	-1.79	-0.28	0.2
9	2.35	WB	-1.79	-0.28	0.2
9	4.7	WB	-1.79	-0.28	0.2

Table 30: Element Forces - Frames, Part 1 of 2

Frame	Station	OutputCase	P	V2	V3
	m		Kgf	Kgf	Kgf
10	0.	DEAD	-6106.02	21.5	2.13
10	2.35	DEAD	-5734.73	21.5	2.13
10	4.7	DEAD	-5363.45	21.5	2.13
10	0.	LIVE	-5003.58	21.85	2.51
10	2.35	LIVE	-5003.58	21.85	2.51
10	4.7	LIVE	-5003.58	21.85	2.51
10	0.	SX	1189.13	570.09	27.08
10	2.35	SX	1189.13	570.09	27.08
10	4.7	SX	1189.13	570.09	27.08
10	0.	SY	407.64	227.58	145.93
10	2.35	SY	407.64	227.58	145.93
10	4.7	SY	407.64	227.58	145.93
10	0.	WB	-187.92	0.61	0.11
10	2.35	WB	-187.92	0.61	0.11
10	4.7	WB	-187.92	0.61	0.11
11	0.	DEAD	-5925.91	4.71	2.93
11	2.35	DEAD	-5554.63	4.71	2.93
11	4.7	DEAD	-5183.34	4.71	2.93
11	0.	LIVE	-4741.51	6.46	3.62
11	2.35	LIVE	-4741.51	6.46	3.62
11	4.7	LIVE	-4741.51	6.46	3.62
11	0.	SX	1266.25	563.27	24.2
11	2.35	SX	1266.25	563.27	24.2
11	4.7	SX	1266.25	563.27	24.2
11	0.	SY	468.62	223.47	107.38
11	2.35	SY	468.62	223.47	107.38
11	4.7	SY	468.62	223.47	107.38
11	0.	WB	-176.79	-3.453E-02	0.15
11	2.35	WB	-176.79	-3.453E-02	0.15
11	4.7	WB	-176.79	-3.453E-02	0.15
12	0.	DEAD	-10467.11	30.27	76.32
12	2.35	DEAD	-10095.83	30.27	76.32
12	4.7	DEAD	-9724.54	30.27	76.32
12	0.	LIVE	-8532.43	42.24	63.14
12	2.35	LIVE	-8532.43	42.24	63.14
12	4.7	LIVE	-8532.43	42.24	63.14
12	0.	SX	643.89	517.19	57.56
12	2.35	SX	643.89	517.19	57.56
12	4.7	SX	643.89	517.19	57.56
12	0.	SY	875.79	211.52	210.01
12	2.35	SY	875.79	211.52	210.01
12	4.7	SY	875.79	211.52	210.01
12	0.	WB	-141.54	1.61	7.248E-02
12	2.35	WB	-141.54	1.61	7.248E-02
12	4.7	WB	-141.54	1.61	7.248E-02
13	0.	DEAD	-11173.4	22.54	79.66
13	2.35	DEAD	-10802.12	22.54	79.66
13	4.7	DEAD	-10430.84	22.54	79.66
13	0.	LIVE	-9274.2	18.54	66.42
13	2.35	LIVE	-9274.2	18.54	66.42
13	4.7	LIVE	-9274.2	18.54	66.42
13	0.	SX	528.65	516.87	58.02
13	2.35	SX	528.65	516.87	58.02
13	4.7	SX	528.65	516.87	58.02

Table 30: Element Forces - Frames, Part 1 of 2

Frame	Station	OutputCase	P	V2	V3
	m		Kgf	Kgf	Kgf
13	0.	SY	1209.57	209.83	295.07
13	2.35	SY	1209.57	209.83	295.07
13	4.7	SY	1209.57	209.83	295.07
13	0.	WB	-159.04	3.346E-02	0.16
13	2.35	WB	-159.04	3.346E-02	0.16
13	4.7	WB	-159.04	3.346E-02	0.16
14	0.	DEAD	-9549.5	18.23	-79.24
14	2.35	DEAD	-9178.22	18.23	-79.24
14	4.7	DEAD	-8806.93	18.23	-79.24
14	0.	LIVE	-7022.16	11.99	-67.21
14	2.35	LIVE	-7022.16	11.99	-67.21
14	4.7	LIVE	-7022.16	11.99	-67.21
14	0.	SX	859.07	550.23	58.82
14	2.35	SX	859.07	550.23	58.82
14	4.7	SX	859.07	550.23	58.82
14	0.	SY	876.01	629.92	293.58
14	2.35	SY	876.01	629.92	293.58
14	4.7	SY	876.01	629.92	293.58
14	0.	WB	-69.42	-0.25	-0.2
14	2.35	WB	-69.42	-0.25	-0.2
14	4.7	WB	-69.42	-0.25	-0.2
15	0.	DEAD	-9251.97	-4.58	-76.31
15	2.35	DEAD	-8880.68	-4.58	-76.31
15	4.7	DEAD	-8509.4	-4.58	-76.31
15	0.	LIVE	-6785.4	-7.12	-64.77
15	2.35	LIVE	-6785.4	-7.12	-64.77
15	4.7	LIVE	-6785.4	-7.12	-64.77
15	0.	SX	453.81	553.84	56.73
15	2.35	SX	453.81	553.84	56.73
15	4.7	SX	453.81	553.84	56.73
15	0.	SY	1209.2	634.43	211.16
15	2.35	SY	1209.2	634.43	211.16
15	4.7	SY	1209.2	634.43	211.16
15	0.	WB	-67.36	-0.27	-0.14
15	2.35	WB	-67.36	-0.27	-0.14
15	4.7	WB	-67.36	-0.27	-0.14
16	0.	DEAD	-12030.78	-42.07	-99.5
16	2.35	DEAD	-11659.49	-42.07	-99.5
16	4.7	DEAD	-11288.21	-42.07	-99.5
16	0.	LIVE	-9258.1	-38.76	-83.08
16	2.35	LIVE	-9258.1	-38.76	-83.08
16	4.7	LIVE	-9258.1	-38.76	-83.08
16	0.	SX	573.1	527.39	63.1
16	2.35	SX	573.1	527.39	63.1
16	4.7	SX	573.1	527.39	63.1
16	0.	SY	918.92	603.34	130.22
16	2.35	SY	918.92	603.34	130.22
16	4.7	SY	918.92	603.34	130.22
16	0.	WB	-78.26	-0.26	0.11
16	2.35	WB	-78.26	-0.26	0.11
16	4.7	WB	-78.26	-0.26	0.11
17	0.	DEAD	-8003.91	91.57	-42.51
17	2.35	DEAD	-7632.63	91.57	-42.51
17	4.7	DEAD	-7261.35	91.57	-42.51

Table 30: Element Forces - Frames, Part 1 of 2

Frame	Station	OutputCase	P	V2	V3
	m		Kgf	Kgf	Kgf
17	0.	LIVE	-5520.26	74.48	-33.32
17	2.35	LIVE	-5520.26	74.48	-33.32
17	4.7	LIVE	-5520.26	74.48	-33.32
17	0.	SX	844.49	395.3	95.59
17	2.35	SX	844.49	395.3	95.59
17	4.7	SX	844.49	395.3	95.59
17	0.	SY	834.	467.56	159.44
17	2.35	SY	834.	467.56	159.44
17	4.7	SY	834.	467.56	159.44
17	0.	WB	-55.35	-0.26	6.272E-02
17	2.35	WB	-55.35	-0.26	6.272E-02
17	4.7	WB	-55.35	-0.26	6.272E-02
18	0.	DEAD	-10847.81	177.06	30.17
18	2.35	DEAD	-10476.52	177.06	30.17
18	4.7	DEAD	-10105.24	177.06	30.17
18	0.	LIVE	-7273.37	152.25	24.65
18	2.35	LIVE	-7273.37	152.25	24.65
18	4.7	LIVE	-7273.37	152.25	24.65
18	0.	SX	1185.17	384.05	129.61
18	2.35	SX	1185.17	384.05	129.61
18	4.7	SX	1185.17	384.05	129.61
18	0.	SY	501.39	157.92	217.52
18	2.35	SY	501.39	157.92	217.52
18	4.7	SY	501.39	157.92	217.52
18	0.	WB	5.46	-0.18	1.447E-02
18	2.35	WB	5.46	-0.18	1.447E-02
18	4.7	WB	5.46	-0.18	1.447E-02
19	0.	DEAD	-7179.01	84.73	2.81
19	2.35	DEAD	-6807.72	84.73	2.81
19	4.7	DEAD	-6436.44	84.73	2.81
19	0.	LIVE	-4087.51	66.	1.4
19	2.35	LIVE	-4087.51	66.	1.4
19	4.7	LIVE	-4087.51	66.	1.4
19	0.	SX	1852.09	415.9	136.61
19	2.35	SX	1852.09	415.9	136.61
19	4.7	SX	1852.09	415.9	136.61
19	0.	SY	1159.31	195.2	229.42
19	2.35	SY	1159.31	195.2	229.42
19	4.7	SY	1159.31	195.2	229.42
19	0.	WB	1.52	-0.39	3.011E-02
19	2.35	WB	1.52	-0.39	3.011E-02
19	4.7	WB	1.52	-0.39	3.011E-02
20	0.	DEAD	-4855.29	60.13	8.37
20	2.35	DEAD	-4484.	60.13	8.37
20	4.7	DEAD	-4112.72	60.13	8.37
20	0.	LIVE	-2171.89	45.55	4.81
20	2.35	LIVE	-2171.89	45.55	4.81
20	4.7	LIVE	-2171.89	45.55	4.81
20	0.	SX	1945.83	373.16	107.09
20	2.35	SX	1945.83	373.16	107.09
20	4.7	SX	1945.83	373.16	107.09
20	0.	SY	1701.41	346.63	184.65
20	2.35	SY	1701.41	346.63	184.65
20	4.7	SY	1701.41	346.63	184.65

Table 30: Element Forces - Frames, Part 1 of 2

Frame	Station	OutputCase	P	V2	V3
	m		Kgf	Kgf	Kgf
20	0.	WB	8.91	-0.34	1.533E-02
20	2.35	WB	8.91	-0.34	1.533E-02
20	4.7	WB	8.91	-0.34	1.533E-02
21	0.	DEAD	-16339.39	-101.58	62.65
21	2.35	DEAD	-15968.1	-101.58	62.65
21	4.7	DEAD	-15596.82	-101.58	62.65
21	0.	LIVE	-13675.08	-96.68	39.64
21	2.35	LIVE	-13675.08	-96.68	39.64
21	4.7	LIVE	-13675.08	-96.68	39.64
21	0.	SX	981.53	482.19	116.16
21	2.35	SX	981.53	482.19	116.16
21	4.7	SX	981.53	482.19	116.16
21	0.	SY	954.97	198.61	183.02
21	2.35	SY	954.97	198.61	183.02
21	4.7	SY	954.97	198.61	183.02
21	0.	WB	-156.06	-0.68	-1.29
21	2.35	WB	-156.06	-0.68	-1.29
21	4.7	WB	-156.06	-0.68	-1.29
22	0.	DEAD	-5205.22	27.2	16.86
22	2.35	DEAD	-4833.93	27.2	16.86
22	4.7	DEAD	-4462.65	27.2	16.86
22	0.	LIVE	-3986.5	25.93	26.41
22	2.35	LIVE	-3986.5	25.93	26.41
22	4.7	LIVE	-3986.5	25.93	26.41
22	0.	SX	1384.69	399.04	67.71
22	2.35	SX	1384.69	399.04	67.71
22	4.7	SX	1384.69	399.04	67.71
22	0.	SY	1493.65	163.68	132.36
22	2.35	SY	1493.65	163.68	132.36
22	4.7	SY	1493.65	163.68	132.36
22	0.	WB	-149.43	0.78	1.36
22	2.35	WB	-149.43	0.78	1.36
22	4.7	WB	-149.43	0.78	1.36
23	0.	DEAD	-5491.17	-59.9	-27.86
23	2.35	DEAD	-4382.48	-59.9	-27.86
23	4.7	DEAD	-3273.79	-59.9	-27.86
23	0.	LIVE	-1381.61	-4.81	-6.94
23	2.35	LIVE	-1381.61	-4.81	-6.94
23	4.7	LIVE	-1381.61	-4.81	-6.94
23	0.	SX	2239.38	2061.05	1614.5
23	2.35	SX	2239.38	2061.05	1614.5
23	4.7	SX	2239.38	2061.05	1614.5
23	0.	SY	4067.19	854.31	2788.34
23	2.35	SY	4067.19	854.31	2788.34
23	4.7	SY	4067.19	854.31	2788.34
23	0.	WB	-13.45	4.15	-0.22
23	2.35	WB	-13.45	4.15	-0.22
23	4.7	WB	-13.45	4.15	-0.22
24	0.	DEAD	-12075.47	-117.72	7.97
24	2.35	DEAD	-10966.78	-117.72	7.97
24	4.7	DEAD	-9858.09	-117.72	7.97
24	0.	LIVE	-3913.52	-85.66	6.01
24	2.35	LIVE	-3913.52	-85.66	6.01
24	4.7	LIVE	-3913.52	-85.66	6.01

Table 30: Element Forces - Frames, Part 1 of 2

Frame	Station	OutputCase	P	V2	V3
	m		Kgf	Kgf	Kgf
24	0.	SX	927.85	2184.34	1621.88
24	2.35	SX	927.85	2184.34	1621.88
24	4.7	SX	927.85	2184.34	1621.88
24	0.	SY	718.31	1050.49	2817.46
24	2.35	SY	718.31	1050.49	2817.46
24	4.7	SY	718.31	1050.49	2817.46
24	0.	WB	-4.29	1.18	-5.605E-02
24	2.35	WB	-4.29	1.18	-5.605E-02
24	4.7	WB	-4.29	1.18	-5.605E-02
25	0.	DEAD	-7592.49	-57.49	19.05
25	2.35	DEAD	-6882.93	-57.49	19.05
25	4.7	DEAD	-6173.36	-57.49	19.05
25	0.	LIVE	-2381.88	-47.82	5.72
25	2.35	LIVE	-2381.88	-47.82	5.72
25	4.7	LIVE	-2381.88	-47.82	5.72
25	0.	SX	2931.35	967.24	653.45
25	2.35	SX	2931.35	967.24	653.45
25	4.7	SX	2931.35	967.24	653.45
25	0.	SY	3698.64	1007.62	1164.55
25	2.35	SY	3698.64	1007.62	1164.55
25	4.7	SY	3698.64	1007.62	1164.55
25	0.	WB	-1.75	-9.437E-02	-1.001E-02
25	2.35	WB	-1.75	-9.437E-02	-1.001E-02
25	4.7	WB	-1.75	-9.437E-02	-1.001E-02
37	0.	DEAD	28.84	-848.36	0.17
37	0.4167	DEAD	28.84	-824.59	0.17
37	0.8334	DEAD	28.84	-800.81	0.17
37	1.2501	DEAD	28.84	-777.03	0.17
37	0.	LIVE	21.48	-704.61	0.12
37	0.4167	LIVE	21.48	-704.61	0.12
37	0.8334	LIVE	21.48	-704.61	0.12
37	1.2501	LIVE	21.48	-704.61	0.12
37	0.	SX	66.14	269.81	0.68
37	0.4167	SX	66.14	269.81	0.68
37	0.8334	SX	66.14	269.81	0.68
37	1.2501	SX	66.14	269.81	0.68
37	0.	SY	203.83	1314.54	1.13
37	0.4167	SY	203.83	1314.54	1.13
37	0.8334	SY	203.83	1314.54	1.13
37	1.2501	SY	203.83	1314.54	1.13
37	0.	WB	-0.21	-2.09	-1.695E-03
37	0.4167	WB	-0.21	-2.09	-1.695E-03
37	0.8334	WB	-0.21	-2.09	-1.695E-03
37	1.2501	WB	-0.21	-2.09	-1.695E-03
38	0.	DEAD	-2.1	94.15	-7.122E-02
38	0.44003	DEAD	-2.1	107.65	-7.122E-02
38	0.88005	DEAD	-2.1	121.16	-7.122E-02
38	0.	LIVE	-1.28	169.03	-4.409E-02
38	0.44003	LIVE	-1.28	169.03	-4.409E-02
38	0.88005	LIVE	-1.28	169.03	-4.409E-02
38	0.	SX	11.66	4.484E-02	0.71
38	0.44003	SX	11.66	4.484E-02	0.71
38	0.88005	SX	11.66	4.484E-02	0.71
38	0.	SY	7.22	2.666E-02	1.55

Table 30: Element Forces - Frames, Part 1 of 2

Frame	Station	OutputCase	P	V2	V3
	m		Kgf	Kgf	Kgf
38	0.44003	SY	7.22	2.666E-02	1.55
38	0.88005	SY	7.22	2.666E-02	1.55
38	0.	WB	3.617E-02	6.76	1.633E-03
38	0.44003	WB	3.617E-02	6.76	1.633E-03
38	0.88005	WB	3.617E-02	6.76	1.633E-03
40	0.	DEAD	-17.47	-392.16	6.158E-03
40	0.4675	DEAD	-17.47	-377.81	6.158E-03
40	0.935	DEAD	-17.47	-363.46	6.158E-03
40	0.	LIVE	-14.46	-336.08	2.342E-02
40	0.4675	LIVE	-14.46	-336.08	2.342E-02
40	0.935	LIVE	-14.46	-336.08	2.342E-02
40	0.	SX	11.97	14.83	8.539E-02
40	0.4675	SX	11.97	14.83	8.539E-02
40	0.935	SX	11.97	14.83	8.539E-02
40	0.	SY	22.97	9.18	5.870E-02
40	0.4675	SY	22.97	9.18	5.870E-02
40	0.935	SY	22.97	9.18	5.870E-02
40	0.	WB	-4.309E-02	-3.710E-02	1.723E-03
40	0.4675	WB	-4.309E-02	-3.710E-02	1.723E-03
40	0.935	WB	-4.309E-02	-3.710E-02	1.723E-03
41	0.	DEAD	5.6	-109.99	-3.955E-03
41	0.45	DEAD	5.6	-96.18	-3.955E-03
41	0.9	DEAD	5.6	-82.37	-3.955E-03
41	0.	LIVE	4.81	-78.04	1.307E-02
41	0.45	LIVE	4.81	-78.04	1.307E-02
41	0.9	LIVE	4.81	-78.04	1.307E-02
41	0.	SX	9.63	17.83	0.13
41	0.45	SX	9.63	17.83	0.13
41	0.9	SX	9.63	17.83	0.13
41	0.	SY	16.38	18.7	5.753E-02
41	0.45	SY	16.38	18.7	5.753E-02
41	0.9	SY	16.38	18.7	5.753E-02
41	0.	WB	6.985E-02	1.839E-02	1.625E-03
41	0.45	WB	6.985E-02	1.839E-02	1.625E-03
41	0.9	WB	6.985E-02	1.839E-02	1.625E-03
42	0.	DEAD	16.49	56.78	-3.448E-03
42	0.45	DEAD	16.49	70.59	-3.448E-03
42	0.9	DEAD	16.49	84.4	-3.448E-03
42	0.	LIVE	14.05	62.55	-2.364E-03
42	0.45	LIVE	14.05	62.55	-2.364E-03
42	0.9	LIVE	14.05	62.55	-2.364E-03
42	0.	SX	5.98	10.68	0.26
42	0.45	SX	5.98	10.68	0.26
42	0.9	SX	5.98	10.68	0.26
42	0.	SY	8.49	4.48	0.19
42	0.45	SY	8.49	4.48	0.19
42	0.9	SY	8.49	4.48	0.19
42	0.	WB	0.11	7.345E-02	-2.085E-04
42	0.45	WB	0.11	7.345E-02	-2.085E-04
42	0.9	WB	0.11	7.345E-02	-2.085E-04
43	0.	DEAD	16.3	215.7	-1.704E-02
43	0.45	DEAD	16.3	229.51	-1.704E-02
43	0.9	DEAD	16.3	243.32	-1.704E-02
43	0.	LIVE	14.11	197.86	-4.615E-03

Table 30: Element Forces - Frames, Part 1 of 2

Frame	Station	OutputCase	P	V2	V3
	m		Kgf	Kgf	Kgf
43	0.45	LIVE	14.11	197.86	-4.615E-03
43	0.9	LIVE	14.11	197.86	-4.615E-03
43	0.	SX	5.91	7.92	0.21
43	0.45	SX	5.91	7.92	0.21
43	0.9	SX	5.91	7.92	0.21
43	0.	SY	11.8	20.43	0.11
43	0.45	SY	11.8	20.43	0.11
43	0.9	SY	11.8	20.43	0.11
43	0.	WB	0.1	0.12	7.798E-04
43	0.45	WB	0.1	0.12	7.798E-04
43	0.9	WB	0.1	0.12	7.798E-04
44	0.	DEAD	8.88	414.7	3.572E-02
44	0.45	DEAD	8.88	428.51	3.572E-02
44	0.9	DEAD	8.88	442.32	3.572E-02
44	0.	LIVE	8.97	377.99	2.910E-02
44	0.45	LIVE	8.97	377.99	2.910E-02
44	0.9	LIVE	8.97	377.99	2.910E-02
44	0.	SX	4.62	7.38	0.23
44	0.45	SX	4.62	7.38	0.23
44	0.9	SX	4.62	7.38	0.23
44	0.	SY	21.42	32.68	0.15
44	0.45	SY	21.42	32.68	0.15
44	0.9	SY	21.42	32.68	0.15
44	0.	WB	0.18	8.677E-03	-1.853E-04
44	0.45	WB	0.18	8.677E-03	-1.853E-04
44	0.9	WB	0.18	8.677E-03	-1.853E-04
45	0.	DEAD	-4.34	493.61	9.404E-02
45	0.465	DEAD	-4.34	507.88	9.404E-02
45	0.	LIVE	-0.99	457.97	5.412E-02
45	0.465	LIVE	-0.99	457.97	5.412E-02
45	0.	SX	6.01	48.72	1.07
45	0.465	SX	6.01	48.72	1.07
45	0.	SY	28.93	46.1	2.12
45	0.465	SY	28.93	46.1	2.12
45	0.	WB	0.24	-0.27	-3.121E-03
45	0.465	WB	0.24	-0.27	-3.121E-03
46	0.	DEAD	-0.77	-437.78	-7.847E-02
46	0.435	DEAD	-0.77	-424.43	-7.847E-02
46	0.	LIVE	0.77	-401.38	-9.019E-02
46	0.435	LIVE	0.77	-401.38	-9.019E-02
46	0.	SX	8.66	38.61	1.3
46	0.435	SX	8.66	38.61	1.3
46	0.	SY	29.21	22.35	1.86
46	0.435	SY	29.21	22.35	1.86
46	0.	WB	0.13	-8.583E-02	-3.984E-03
46	0.435	WB	0.13	-8.583E-02	-3.984E-03
47	0.	DEAD	12.64	-370.29	-5.409E-02
47	0.45	DEAD	12.64	-356.48	-5.409E-02
47	0.9	DEAD	12.64	-342.67	-5.409E-02
47	0.	LIVE	11.35	-316.28	-5.319E-02
47	0.45	LIVE	11.35	-316.28	-5.319E-02
47	0.9	LIVE	11.35	-316.28	-5.319E-02
47	0.	SX	5.31	10.5	0.45
47	0.45	SX	5.31	10.5	0.45

Table 30: Element Forces - Frames, Part 1 of 2

Frame	Station	OutputCase	P	V2	V3
	m		Kgf	Kgf	Kgf
47	0.9	SX	5.31	10.5	0.45
47	0.	SY	5.02	31.02	1.
47	0.45	SY	5.02	31.02	1.
47	0.9	SY	5.02	31.02	1.
47	0.	WB	8.880E-02	3.203E-02	-1.388E-03
47	0.45	WB	8.880E-02	3.203E-02	-1.388E-03
47	0.9	WB	8.880E-02	3.203E-02	-1.388E-03
48	0.	DEAD	21.5	-116.46	-2.096E-02
48	0.45	DEAD	21.5	-102.65	-2.096E-02
48	0.9	DEAD	21.5	-88.84	-2.096E-02
48	0.	LIVE	18.61	-88.45	-2.389E-02
48	0.45	LIVE	18.61	-88.45	-2.389E-02
48	0.9	LIVE	18.61	-88.45	-2.389E-02
48	0.	SX	2.58	28.76	0.39
48	0.45	SX	2.58	28.76	0.39
48	0.9	SX	2.58	28.76	0.39
48	0.	SY	5.97	37.18	0.83
48	0.45	SY	5.97	37.18	0.83
48	0.9	SY	5.97	37.18	0.83
48	0.	WB	9.116E-02	-2.102E-03	-1.074E-03
48	0.45	WB	9.116E-02	-2.102E-03	-1.074E-03
48	0.9	WB	9.116E-02	-2.102E-03	-1.074E-03
49	0.	DEAD	14.05	140.	-1.280E-02
49	0.45	DEAD	14.05	153.81	-1.280E-02
49	0.9	DEAD	14.05	167.62	-1.280E-02
49	0.	LIVE	12.71	133.	-1.427E-02
49	0.45	LIVE	12.71	133.	-1.427E-02
49	0.9	LIVE	12.71	133.	-1.427E-02
49	0.	SX	6.08	10.93	0.45
49	0.45	SX	6.08	10.93	0.45
49	0.9	SX	6.08	10.93	0.45
49	0.	SY	3.86	16.16	0.99
49	0.45	SY	3.86	16.16	0.99
49	0.9	SY	3.86	16.16	0.99
49	0.	WB	0.11	-0.31	-7.318E-04
49	0.45	WB	0.11	-0.31	-7.318E-04
49	0.9	WB	0.11	-0.31	-7.318E-04
50	0.	DEAD	-2.77	328.1	7.380E-03
50	0.3325	DEAD	-2.77	338.3	7.380E-03
50	0.665	DEAD	-2.77	348.51	7.380E-03
50	0.	LIVE	-0.66	305.92	2.173E-03
50	0.3325	LIVE	-0.66	305.92	2.173E-03
50	0.665	LIVE	-0.66	305.92	2.173E-03
50	0.	SX	8.02	43.79	0.93
50	0.3325	SX	8.02	43.79	0.93
50	0.665	SX	8.02	43.79	0.93
50	0.	SY	4.67	26.02	1.93
50	0.3325	SY	4.67	26.02	1.93
50	0.665	SY	4.67	26.02	1.93
50	0.	WB	0.16	-0.43	-1.082E-03
50	0.3325	WB	0.16	-0.43	-1.082E-03
50	0.665	WB	0.16	-0.43	-1.082E-03
51	0.	DEAD	3.24	-285.59	6.316E-03
51	0.34503	DEAD	3.24	-275.01	6.316E-03

Table 30: Element Forces - Frames, Part 1 of 2

Frame	Station	OutputCase	P	V2	V3
	m		Kgf	Kgf	Kgf
51	0.69005	DEAD	3.24	-264.42	6.316E-03
51	1.03508	DEAD	3.24	-253.83	6.316E-03
51	0.	LIVE	4.36	-247.92	6.519E-03
51	0.34503	LIVE	4.36	-247.92	6.519E-03
51	0.69005	LIVE	4.36	-247.92	6.519E-03
51	1.03508	LIVE	4.36	-247.92	6.519E-03
51	0.	SX	13.05	8.34	0.48
51	0.34503	SX	13.05	8.34	0.48
51	0.69005	SX	13.05	8.34	0.48
51	1.03508	SX	13.05	8.34	0.48
51	0.	SY	41.94	9.31	0.91
51	0.34503	SY	41.94	9.31	0.91
51	0.69005	SY	41.94	9.31	0.91
51	1.03508	SY	41.94	9.31	0.91
51	0.	WB	0.15	0.6	-2.129E-04
51	0.34503	WB	0.15	0.6	-2.129E-04
51	0.69005	WB	0.15	0.6	-2.129E-04
51	1.03508	WB	0.15	0.6	-2.129E-04
52	0.	DEAD	15.59	-15.92	3.040E-02
52	0.45	DEAD	15.59	-2.11	3.040E-02
52	0.9	DEAD	15.59	11.7	3.040E-02
52	0.	LIVE	13.46	-0.7	2.566E-02
52	0.45	LIVE	13.46	-0.7	2.566E-02
52	0.9	LIVE	13.46	-0.7	2.566E-02
52	0.	SX	12.41	33.23	0.54
52	0.45	SX	12.41	33.23	0.54
52	0.9	SX	12.41	33.23	0.54
52	0.	SY	35.07	19.97	1.08
52	0.45	SY	35.07	19.97	1.08
52	0.9	SY	35.07	19.97	1.08
52	0.	WB	5.478E-02	9.905E-02	-2.996E-04
52	0.45	WB	5.478E-02	9.905E-02	-2.996E-04
52	0.9	WB	5.478E-02	9.905E-02	-2.996E-04
53	0.	DEAD	1.44	246.8	2.296E-02
53	0.34503	DEAD	1.44	257.39	2.296E-02
53	0.69005	DEAD	1.44	267.98	2.296E-02
53	1.03508	DEAD	1.44	278.57	2.296E-02
53	0.	LIVE	0.81	240.29	2.431E-02
53	0.34503	LIVE	0.81	240.29	2.431E-02
53	0.69005	LIVE	0.81	240.29	2.431E-02
53	1.03508	LIVE	0.81	240.29	2.431E-02
53	0.	SX	19.56	13.8	0.42
53	0.34503	SX	19.56	13.8	0.42
53	0.69005	SX	19.56	13.8	0.42
53	1.03508	SX	19.56	13.8	0.42
53	0.	SY	16.52	9.42	0.71
53	0.34503	SY	16.52	9.42	0.71
53	0.69005	SY	16.52	9.42	0.71
53	1.03508	SY	16.52	9.42	0.71
53	0.	WB	-2.776E-02	-0.63	2.395E-04
53	0.34503	WB	-2.776E-02	-0.63	2.395E-04
53	0.69005	WB	-2.776E-02	-0.63	2.395E-04
53	1.03508	WB	-2.776E-02	-0.63	2.395E-04
54	0.	DEAD	2.68	-307.44	6.620E-02

Table 30: Element Forces - Frames, Part 1 of 2

Frame	Station	OutputCase	P	V2	V3
	m		Kgf	Kgf	Kgf
54	0.4675	DEAD	2.68	-293.09	6.620E-02
54	0.935	DEAD	2.68	-278.74	6.620E-02
54	0.	LIVE	4.3	-265.14	7.196E-02
54	0.4675	LIVE	4.3	-265.14	7.196E-02
54	0.935	LIVE	4.3	-265.14	7.196E-02
54	0.	SX	13.11	26.26	0.75
54	0.4675	SX	13.11	26.26	0.75
54	0.935	SX	13.11	26.26	0.75
54	0.	SY	23.5	20.57	1.34
54	0.4675	SY	23.5	20.57	1.34
54	0.935	SY	23.5	20.57	1.34
54	0.	WB	0.2	0.3	1.274E-03
54	0.4675	WB	0.2	0.3	1.274E-03
54	0.935	WB	0.2	0.3	1.274E-03
55	0.	DEAD	20.52	-45.52	4.615E-02
55	0.45	DEAD	20.52	-31.71	4.615E-02
55	0.9	DEAD	20.52	-17.9	4.615E-02
55	0.	LIVE	17.77	-22.11	4.429E-02
55	0.45	LIVE	17.77	-22.11	4.429E-02
55	0.9	LIVE	17.77	-22.11	4.429E-02
55	0.	SX	14.29	34.33	0.71
55	0.45	SX	14.29	34.33	0.71
55	0.9	SX	14.29	34.33	0.71
55	0.	SY	24.44	18.38	1.17
55	0.45	SY	24.44	18.38	1.17
55	0.9	SY	24.44	18.38	1.17
55	0.	WB	6.295E-02	0.32	2.927E-04
55	0.45	WB	6.295E-02	0.32	2.927E-04
55	0.9	WB	6.295E-02	0.32	2.927E-04
56	0.	DEAD	23.14	202.77	7.742E-02
56	0.45	DEAD	23.14	216.58	7.742E-02
56	0.9	DEAD	23.14	230.39	7.742E-02
56	0.	LIVE	19.76	192.75	8.086E-02
56	0.45	LIVE	19.76	192.75	8.086E-02
56	0.9	LIVE	19.76	192.75	8.086E-02
56	0.	SX	13.11	46.73	0.83
56	0.45	SX	13.11	46.73	0.83
56	0.9	SX	13.11	46.73	0.83
56	0.	SY	37.86	23.94	1.56
56	0.45	SY	37.86	23.94	1.56
56	0.9	SY	37.86	23.94	1.56
56	0.	WB	3.528E-02	0.38	1.192E-03
56	0.45	WB	3.528E-02	0.38	1.192E-03
56	0.9	WB	3.528E-02	0.38	1.192E-03
57	0.	DEAD	12.81	385.21	3.353E-02
57	0.4325	DEAD	12.81	398.48	3.353E-02
57	0.865	DEAD	12.81	411.75	3.353E-02
57	0.	LIVE	12.15	365.17	3.448E-02
57	0.4325	LIVE	12.15	365.17	3.448E-02
57	0.865	LIVE	12.15	365.17	3.448E-02
57	0.	SX	42.39	4.47	0.82
57	0.4325	SX	42.39	4.47	0.82
57	0.865	SX	42.39	4.47	0.82
57	0.	SY	88.88	16.87	1.31

Table 30: Element Forces - Frames, Part 1 of 2

Frame	Station	OutputCase	P	V2	V3
	m		Kgf	Kgf	Kgf
57	0.4325	SY	88.88	16.87	1.31
57	0.865	SY	88.88	16.87	1.31
57	0.	WB	0.1	0.29	3.832E-04
57	0.4325	WB	0.1	0.29	3.832E-04
57	0.865	WB	0.1	0.29	3.832E-04
58	0.	DEAD	-3.47	-506.45	-4.536E-02
58	0.4675	DEAD	-3.47	-492.1	-4.536E-02
58	0.935	DEAD	-3.47	-477.75	-4.536E-02
58	0.	LIVE	-2.22	-452.49	-4.166E-02
58	0.4675	LIVE	-2.22	-452.49	-4.166E-02
58	0.935	LIVE	-2.22	-452.49	-4.166E-02
58	0.	SX	50.46	47.89	0.15
58	0.4675	SX	50.46	47.89	0.15
58	0.935	SX	50.46	47.89	0.15
58	0.	SY	115.82	26.35	0.37
58	0.4675	SY	115.82	26.35	0.37
58	0.935	SY	115.82	26.35	0.37
58	0.	WB	3.937E-02	-0.53	-3.605E-04
58	0.4675	WB	3.937E-02	-0.53	-3.605E-04
58	0.935	WB	3.937E-02	-0.53	-3.605E-04
59	0.	DEAD	11.82	-320.76	-8.469E-02
59	0.45	DEAD	11.82	-306.95	-8.469E-02
59	0.9	DEAD	11.82	-293.14	-8.469E-02
59	0.	LIVE	9.29	-272.58	-7.458E-02
59	0.45	LIVE	9.29	-272.58	-7.458E-02
59	0.9	LIVE	9.29	-272.58	-7.458E-02
59	0.	SX	45.79	22.78	0.49
59	0.45	SX	45.79	22.78	0.49
59	0.9	SX	45.79	22.78	0.49
59	0.	SY	112.56	19.02	0.65
59	0.45	SY	112.56	19.02	0.65
59	0.9	SY	112.56	19.02	0.65
59	0.	WB	-9.888E-02	-0.47	1.825E-04
59	0.45	WB	-9.888E-02	-0.47	1.825E-04
59	0.9	WB	-9.888E-02	-0.47	1.825E-04
60	0.	DEAD	18.8	-152.89	1.236E-02
60	0.45	DEAD	18.8	-139.08	1.236E-02
60	0.9	DEAD	18.8	-125.27	1.236E-02
60	0.	LIVE	14.9	-123.91	1.738E-02
60	0.45	LIVE	14.9	-123.91	1.738E-02
60	0.9	LIVE	14.9	-123.91	1.738E-02
60	0.	SX	27.	19.61	0.78
60	0.45	SX	27.	19.61	0.78
60	0.9	SX	27.	19.61	0.78
60	0.	SY	73.86	10.81	1.53
60	0.45	SY	73.86	10.81	1.53
60	0.9	SY	73.86	10.81	1.53
60	0.	WB	-9.910E-02	-0.13	1.664E-03
60	0.45	WB	-9.910E-02	-0.13	1.664E-03
60	0.9	WB	-9.910E-02	-0.13	1.664E-03
61	0.	DEAD	13.18	-15.93	-4.370E-02
61	0.45	DEAD	13.18	-2.12	-4.370E-02
61	0.9	DEAD	13.18	11.69	-4.370E-02
61	0.	LIVE	10.56	-2.87	-3.533E-02

Table 30: Element Forces - Frames, Part 1 of 2

Frame	Station	OutputCase	P	V2	V3
	m		Kgf	Kgf	Kgf
61	0.45	LIVE	10.56	-2.87	-3.533E-02
61	0.9	LIVE	10.56	-2.87	-3.533E-02
61	0.	SX	11.81	1.77	0.96
61	0.45	SX	11.81	1.77	0.96
61	0.9	SX	11.81	1.77	0.96
61	0.	SY	26.52	2.6	1.68
61	0.45	SY	26.52	2.6	1.68
61	0.9	SY	26.52	2.6	1.68
61	0.	WB	-3.562E-02	0.13	1.339E-03
61	0.45	WB	-3.562E-02	0.13	1.339E-03
61	0.9	WB	-3.562E-02	0.13	1.339E-03
62	0.	DEAD	0.32	139.	6.468E-02
62	0.45	DEAD	0.32	152.81	6.468E-02
62	0.9	DEAD	0.32	166.62	6.468E-02
62	0.	LIVE	-0.15	134.86	5.437E-02
62	0.45	LIVE	-0.15	134.86	5.437E-02
62	0.9	LIVE	-0.15	134.86	5.437E-02
62	0.	SX	4.61	31.96	0.78
62	0.45	SX	4.61	31.96	0.78
62	0.9	SX	4.61	31.96	0.78
62	0.	SY	11.05	19.76	1.41
62	0.45	SY	11.05	19.76	1.41
62	0.9	SY	11.05	19.76	1.41
62	0.	WB	-1.413E-02	0.17	1.279E-03
62	0.45	WB	-1.413E-02	0.17	1.279E-03
62	0.9	WB	-1.413E-02	0.17	1.279E-03
63	0.	DEAD	-21.74	385.44	-4.237E-02
63	0.36076	DEAD	-21.74	396.51	-4.237E-02
63	0.72151	DEAD	-21.74	407.58	-4.237E-02
63	0.	LIVE	-18.62	360.77	-4.404E-02
63	0.36076	LIVE	-18.62	360.77	-4.404E-02
63	0.72151	LIVE	-18.62	360.77	-4.404E-02
63	0.	SX	6.97	9.92	0.77
63	0.36076	SX	6.97	9.92	0.77
63	0.72151	SX	6.97	9.92	0.77
63	0.	SY	34.39	9.34	1.5
63	0.36076	SY	34.39	9.34	1.5
63	0.72151	SY	34.39	9.34	1.5
63	0.	WB	-2.463E-02	0.12	7.190E-04
63	0.36076	WB	-2.463E-02	0.12	7.190E-04
63	0.72151	WB	-2.463E-02	0.12	7.190E-04
110	0.	DEAD	83.46	-1230.33	-0.95
110	0.4675	DEAD	83.46	-1203.65	-0.95
110	0.935	DEAD	83.46	-1176.97	-0.95
110	0.	LIVE	72.39	-1016.4	-0.72
110	0.4675	LIVE	72.39	-1016.4	-0.72
110	0.935	LIVE	72.39	-1016.4	-0.72
110	0.	SX	64.99	694.75	0.38
110	0.4675	SX	64.99	694.75	0.38
110	0.935	SX	64.99	694.75	0.38
110	0.	SY	171.04	799.77	0.2
110	0.4675	SY	171.04	799.77	0.2
110	0.935	SY	171.04	799.77	0.2
110	0.	WB	0.2	-0.27	2.013E-03

Table 30: Element Forces - Frames, Part 1 of 2

Frame	Station	OutputCase	P	V2	V3
	m		Kgf	Kgf	Kgf
110	0.4675	WB	0.2	-0.27	2.013E-03
110	0.935	WB	0.2	-0.27	2.013E-03
111	0.	DEAD	58.86	-700.	-0.42
111	0.45	DEAD	58.86	-674.32	-0.42
111	0.9	DEAD	58.86	-648.64	-0.42
111	0.	LIVE	52.14	-569.64	-0.34
111	0.45	LIVE	52.14	-569.64	-0.34
111	0.9	LIVE	52.14	-569.64	-0.34
111	0.	SX	50.96	643.51	0.21
111	0.45	SX	50.96	643.51	0.21
111	0.9	SX	50.96	643.51	0.21
111	0.	SY	146.22	644.45	0.6
111	0.45	SY	146.22	644.45	0.6
111	0.9	SY	146.22	644.45	0.6
111	0.	WB	0.16	-0.28	1.012E-03
111	0.45	WB	0.16	-0.28	1.012E-03
111	0.9	WB	0.16	-0.28	1.012E-03
112	0.	DEAD	47.1	-136.08	-0.24
112	0.45	DEAD	47.1	-110.4	-0.24
112	0.9	DEAD	47.1	-84.72	-0.24
112	0.	LIVE	43.03	-96.32	-0.17
112	0.45	LIVE	43.03	-96.32	-0.17
112	0.9	LIVE	43.03	-96.32	-0.17
112	0.	SX	44.75	610.78	0.16
112	0.45	SX	44.75	610.78	0.16
112	0.9	SX	44.75	610.78	0.16
112	0.	SY	131.34	610.08	0.55
112	0.45	SY	131.34	610.08	0.55
112	0.9	SY	131.34	610.08	0.55
112	0.	WB	0.23	-0.31	3.983E-03
112	0.45	WB	0.23	-0.31	3.983E-03
112	0.9	WB	0.23	-0.31	3.983E-03
113	0.	DEAD	45.25	431.57	0.17
113	0.45	DEAD	45.25	457.25	0.17
113	0.9	DEAD	45.25	482.92	0.17
113	0.	LIVE	41.7	380.37	0.12
113	0.45	LIVE	41.7	380.37	0.12
113	0.9	LIVE	41.7	380.37	0.12
113	0.	SX	38.54	613.64	0.41
113	0.45	SX	38.54	613.64	0.41
113	0.9	SX	38.54	613.64	0.41
113	0.	SY	110.25	613.07	0.47
113	0.45	SY	110.25	613.07	0.47
113	0.9	SY	110.25	613.07	0.47
113	0.	WB	0.27	-0.34	-1.768E-03
113	0.45	WB	0.27	-0.34	-1.768E-03
113	0.9	WB	0.27	-0.34	-1.768E-03
114	0.	DEAD	50.69	974.39	9.396E-02
114	0.45	DEAD	50.69	1000.06	9.396E-02
114	0.9	DEAD	50.69	1025.74	9.396E-02
114	0.	LIVE	45.26	837.28	5.682E-02
114	0.45	LIVE	45.26	837.28	5.682E-02
114	0.9	LIVE	45.26	837.28	5.682E-02
114	0.	SX	46.78	652.76	0.55

Table 30: Element Forces - Frames, Part 1 of 2

Frame	Station	OutputCase	P	V2	V3
	m		Kgf	Kgf	Kgf
114	0.45	SX	46.78	652.76	0.55
114	0.9	SX	46.78	652.76	0.55
114	0.	SY	96.7	596.82	1.08
114	0.45	SY	96.7	596.82	1.08
114	0.9	SY	96.7	596.82	1.08
114	0.	WB	0.19	-0.36	-1.889E-03
114	0.45	WB	0.19	-0.36	-1.889E-03
114	0.9	WB	0.19	-0.36	-1.889E-03
115	0.	DEAD	57.15	1402.96	6.52
115	0.465	DEAD	57.15	1429.49	6.52
115	0.	LIVE	49.66	1185.29	5.09
115	0.465	LIVE	49.66	1185.29	5.09
115	0.	SX	53.47	701.11	1.43
115	0.465	SX	53.47	701.11	1.43
115	0.	SY	73.11	511.91	2.93
115	0.465	SY	73.11	511.91	2.93
115	0.	WB	0.11	-0.42	-1.791E-02
115	0.465	WB	0.11	-0.42	-1.791E-02
116	0.	DEAD	12.36	-939.59	-7.68
116	0.435	DEAD	12.36	-914.77	-7.68
116	0.	LIVE	12.37	-776.5	-6.2
116	0.435	LIVE	12.37	-776.5	-6.2
116	0.	SX	49.24	904.91	2.37
116	0.435	SX	49.24	904.91	2.37
116	0.	SY	160.54	1118.88	5.08
116	0.435	SY	160.54	1118.88	5.08
116	0.	WB	0.16	9.835E-02	-6.877E-04
116	0.435	WB	0.16	9.835E-02	-6.877E-04
117	0.	DEAD	5.42	-579.53	-0.16
117	0.45	DEAD	5.42	-553.85	-0.16
117	0.9	DEAD	5.42	-528.17	-0.16
117	0.	LIVE	6.21	-466.02	-0.16
117	0.45	LIVE	6.21	-466.02	-0.16
117	0.9	LIVE	6.21	-466.02	-0.16
117	0.	SX	54.24	879.53	0.92
117	0.45	SX	54.24	879.53	0.92
117	0.9	SX	54.24	879.53	0.92
117	0.	SY	141.4	939.58	1.83
117	0.45	SY	141.4	939.58	1.83
117	0.9	SY	141.4	939.58	1.83
117	0.	WB	0.1	-2.322E-02	-3.771E-03
117	0.45	WB	0.1	-2.322E-02	-3.771E-03
117	0.9	WB	0.1	-2.322E-02	-3.771E-03
118	0.	DEAD	-2.55	-117.46	-0.11
118	0.45	DEAD	-2.55	-91.78	-0.11
118	0.9	DEAD	-2.55	-66.1	-0.11
118	0.	LIVE	-1.13	-80.23	-0.12
118	0.45	LIVE	-1.13	-80.23	-0.12
118	0.9	LIVE	-1.13	-80.23	-0.12
118	0.	SX	66.28	857.25	1.13
118	0.45	SX	66.28	857.25	1.13
118	0.9	SX	66.28	857.25	1.13
118	0.	SY	85.96	852.6	2.76
118	0.45	SY	85.96	852.6	2.76

Table 30: Element Forces - Frames, Part 1 of 2

Frame	Station	OutputCase	P	V2	V3
	m		Kgf	Kgf	Kgf
118	0.9	SY	85.96	852.6	2.76
118	0.	WB	-3.475E-03	-0.2	-4.380E-03
118	0.45	WB	-3.475E-03	-0.2	-4.380E-03
118	0.9	WB	-3.475E-03	-0.2	-4.380E-03
119	0.	DEAD	1.41	346.74	2.809E-02
119	0.45	DEAD	1.41	372.42	2.809E-02
119	0.9	DEAD	1.41	398.09	2.809E-02
119	0.	LIVE	1.3	307.05	7.374E-03
119	0.45	LIVE	1.3	307.05	7.374E-03
119	0.9	LIVE	1.3	307.05	7.374E-03
119	0.	SX	85.52	874.75	1.29
119	0.45	SX	85.52	874.75	1.29
119	0.9	SX	85.52	874.75	1.29
119	0.	SY	41.95	829.64	2.86
119	0.45	SY	41.95	829.64	2.86
119	0.9	SY	41.95	829.64	2.86
119	0.	WB	-0.11	-0.36	-2.499E-03
119	0.45	WB	-0.11	-0.36	-2.499E-03
119	0.9	WB	-0.11	-0.36	-2.499E-03
120	0.	DEAD	11.31	763.31	2.89
120	0.3325	DEAD	11.31	782.28	2.89
120	0.665	DEAD	11.31	801.26	2.89
120	0.	LIVE	8.95	650.59	2.25
120	0.3325	LIVE	8.95	650.59	2.25
120	0.665	LIVE	8.95	650.59	2.25
120	0.	SX	107.88	924.54	1.56
120	0.3325	SX	107.88	924.54	1.56
120	0.665	SX	107.88	924.54	1.56
120	0.	SY	80.22	791.25	4.52
120	0.3325	SY	80.22	791.25	4.52
120	0.665	SY	80.22	791.25	4.52
120	0.	WB	-0.19	-0.48	-1.490E-02
120	0.3325	WB	-0.19	-0.48	-1.490E-02
120	0.665	WB	-0.19	-0.48	-1.490E-02
121	0.	DEAD	-8.04	-490.25	-0.88
121	0.34503	DEAD	-8.04	-470.56	-0.88
121	0.69005	DEAD	-8.04	-450.88	-0.88
121	1.03508	DEAD	-8.04	-431.19	-0.88
121	0.	LIVE	-7.51	-397.05	-0.68
121	0.34503	LIVE	-7.51	-397.05	-0.68
121	0.69005	LIVE	-7.51	-397.05	-0.68
121	1.03508	LIVE	-7.51	-397.05	-0.68
121	0.	SX	82.33	1275.85	1.14
121	0.34503	SX	82.33	1275.85	1.14
121	0.69005	SX	82.33	1275.85	1.14
121	1.03508	SX	82.33	1275.85	1.14
121	0.	SY	54.22	1359.39	2.34
121	0.34503	SY	54.22	1359.39	2.34
121	0.69005	SY	54.22	1359.39	2.34
121	1.03508	SY	54.22	1359.39	2.34
121	0.	WB	-0.25	-0.39	3.868E-03
121	0.34503	WB	-0.25	-0.39	3.868E-03
121	0.69005	WB	-0.25	-0.39	3.868E-03
121	1.03508	WB	-0.25	-0.39	3.868E-03

Table 30: Element Forces - Frames, Part 1 of 2

Frame	Station	OutputCase	P	V2	V3
	m		Kgf	Kgf	Kgf
122	0.	DEAD	-12.59	-16.63	9.495E-02
122	0.45	DEAD	-12.59	9.05	9.495E-02
122	0.9	DEAD	-12.59	34.73	9.495E-02
122	0.	LIVE	-10.19	2.78	0.12
122	0.45	LIVE	-10.19	2.78	0.12
122	0.9	LIVE	-10.19	2.78	0.12
122	0.	SX	121.66	1264.27	1.85
122	0.45	SX	121.66	1264.27	1.85
122	0.9	SX	121.66	1264.27	1.85
122	0.	SY	121.15	1257.16	3.31
122	0.45	SY	121.15	1257.16	3.31
122	0.9	SY	121.15	1257.16	3.31
122	0.	WB	-0.17	-0.35	3.067E-03
122	0.45	WB	-0.17	-0.35	3.067E-03
122	0.9	WB	-0.17	-0.35	3.067E-03
123	0.	DEAD	-0.47	449.68	1.11
123	0.34503	DEAD	-0.47	469.37	1.11
123	0.69005	DEAD	-0.47	489.06	1.11
123	1.03508	DEAD	-0.47	508.74	1.11
123	0.	LIVE	1.67	402.86	0.92
123	0.34503	LIVE	1.67	402.86	0.92
123	0.69005	LIVE	1.67	402.86	0.92
123	1.03508	LIVE	1.67	402.86	0.92
123	0.	SX	166.83	1303.46	1.2
123	0.34503	SX	166.83	1303.46	1.2
123	0.69005	SX	166.83	1303.46	1.2
123	1.03508	SX	166.83	1303.46	1.2
123	0.	SY	218.68	1228.07	2.57
123	0.34503	SY	218.68	1228.07	2.57
123	0.69005	SY	218.68	1228.07	2.57
123	1.03508	SY	218.68	1228.07	2.57
123	0.	WB	-3.044E-02	-0.31	-1.303E-03
123	0.34503	WB	-3.044E-02	-0.31	-1.303E-03
123	0.69005	WB	-3.044E-02	-0.31	-1.303E-03
123	1.03508	WB	-3.044E-02	-0.31	-1.303E-03
124	0.	DEAD	12.82	-645.19	-1.24
124	0.4675	DEAD	12.82	-618.51	-1.24
124	0.935	DEAD	12.82	-591.84	-1.24
124	0.	LIVE	11.93	-527.19	-0.91
124	0.4675	LIVE	11.93	-527.19	-0.91
124	0.935	LIVE	11.93	-527.19	-0.91
124	0.	SX	160.04	949.54	2.1
124	0.4675	SX	160.04	949.54	2.1
124	0.935	SX	160.04	949.54	2.1
124	0.	SY	217.26	1017.51	3.71
124	0.4675	SY	217.26	1017.51	3.71
124	0.935	SY	217.26	1017.51	3.71
124	0.	WB	-0.14	-0.31	1.071E-02
124	0.4675	WB	-0.14	-0.31	1.071E-02
124	0.935	WB	-0.14	-0.31	1.071E-02
125	0.	DEAD	6.22	-182.28	0.43
125	0.45	DEAD	6.22	-156.6	0.43
125	0.9	DEAD	6.22	-130.93	0.43
125	0.	LIVE	9.	-135.67	0.42

Table 30: Element Forces - Frames, Part 1 of 2

Frame	Station	OutputCase	P	V2	V3
	m		Kgf	Kgf	Kgf
125	0.45	LIVE	9.	-135.67	0.42
125	0.9	LIVE	9.	-135.67	0.42
125	0.	SX	212.6	933.13	2.43
125	0.45	SX	212.6	933.13	2.43
125	0.9	SX	212.6	933.13	2.43
125	0.	SY	325.13	939.19	4.72
125	0.45	SY	325.13	939.19	4.72
125	0.9	SY	325.13	939.19	4.72
125	0.	WB	7.909E-02	-0.35	4.747E-03
125	0.45	WB	7.909E-02	-0.35	4.747E-03
125	0.9	WB	7.909E-02	-0.35	4.747E-03
126	0.	DEAD	8.04	282.25	-0.31
126	0.45	DEAD	8.04	307.93	-0.31
126	0.9	DEAD	8.04	333.61	-0.31
126	0.	LIVE	11.88	254.54	-0.23
126	0.45	LIVE	11.88	254.54	-0.23
126	0.9	LIVE	11.88	254.54	-0.23
126	0.	SX	263.42	951.46	2.02
126	0.45	SX	263.42	951.46	2.02
126	0.9	SX	263.42	951.46	2.02
126	0.	SY	434.91	930.64	3.84
126	0.45	SY	434.91	930.64	3.84
126	0.9	SY	434.91	930.64	3.84
126	0.	WB	0.19	-0.39	2.723E-03
126	0.45	WB	0.19	-0.39	2.723E-03
126	0.9	WB	0.19	-0.39	2.723E-03
127	0.	DEAD	11.54	738.56	1.83
127	0.4325	DEAD	11.54	763.24	1.83
127	0.865	DEAD	11.54	787.92	1.83
127	0.	LIVE	14.59	640.32	1.48
127	0.4325	LIVE	14.59	640.32	1.48
127	0.865	LIVE	14.59	640.32	1.48
127	0.	SX	278.7	1011.4	0.56
127	0.4325	SX	278.7	1011.4	0.56
127	0.865	SX	278.7	1011.4	0.56
127	0.	SY	499.52	964.42	2.44
127	0.4325	SY	499.52	964.42	2.44
127	0.865	SY	499.52	964.42	2.44
127	0.	WB	0.17	-0.4	-4.128E-03
127	0.4325	WB	0.17	-0.4	-4.128E-03
127	0.865	WB	0.17	-0.4	-4.128E-03
128	0.	DEAD	62.54	-1303.85	-1.79
128	0.4675	DEAD	62.54	-1277.17	-1.79
128	0.935	DEAD	62.54	-1250.5	-1.79
128	0.	LIVE	55.79	-1081.88	-1.44
128	0.4675	LIVE	55.79	-1081.88	-1.44
128	0.935	LIVE	55.79	-1081.88	-1.44
128	0.	SX	250.23	629.6	0.91
128	0.4675	SX	250.23	629.6	0.91
128	0.935	SX	250.23	629.6	0.91
128	0.	SY	433.58	660.2	1.17
128	0.4675	SY	433.58	660.2	1.17
128	0.935	SY	433.58	660.2	1.17
128	0.	WB	-1.034E-02	0.13	5.354E-03

Table 30: Element Forces - Frames, Part 1 of 2

Frame	Station	OutputCase	P	V2	V3
	m		Kgf	Kgf	Kgf
128	0.4675	WB	-1.034E-02	0.13	5.354E-03
128	0.935	WB	-1.034E-02	0.13	5.354E-03
129	0.	DEAD	49.25	-777.66	9.454E-02
129	0.45	DEAD	49.25	-751.98	9.454E-02
129	0.9	DEAD	49.25	-726.31	9.454E-02
129	0.	LIVE	45.27	-634.64	7.152E-02
129	0.45	LIVE	45.27	-634.64	7.152E-02
129	0.9	LIVE	45.27	-634.64	7.152E-02
129	0.	SX	223.93	596.58	1.46
129	0.45	SX	223.93	596.58	1.46
129	0.9	SX	223.93	596.58	1.46
129	0.	SY	423.13	599.91	1.53
129	0.45	SY	423.13	599.91	1.53
129	0.9	SY	423.13	599.91	1.53
129	0.	WB	8.664E-02	6.913E-02	9.283E-04
129	0.45	WB	8.664E-02	6.913E-02	9.283E-04
129	0.9	WB	8.664E-02	6.913E-02	9.283E-04
130	0.	DEAD	43.46	-222.82	-0.15
130	0.45	DEAD	43.46	-197.14	-0.15
130	0.9	DEAD	43.46	-171.46	-0.15
130	0.	LIVE	40.3	-166.11	-0.13
130	0.45	LIVE	40.3	-166.11	-0.13
130	0.9	LIVE	40.3	-166.11	-0.13
130	0.	SX	176.96	574.27	2.5
130	0.45	SX	176.96	574.27	2.5
130	0.9	SX	176.96	574.27	2.5
130	0.	SY	378.47	570.66	2.81
130	0.45	SY	378.47	570.66	2.81
130	0.9	SY	378.47	570.66	2.81
130	0.	WB	0.11	-5.357E-02	1.597E-03
130	0.45	WB	0.11	-5.357E-02	1.597E-03
130	0.9	WB	0.11	-5.357E-02	1.597E-03
131	0.	DEAD	51.63	349.89	0.53
131	0.45	DEAD	51.63	375.57	0.53
131	0.9	DEAD	51.63	401.25	0.53
131	0.	LIVE	47.04	316.79	0.46
131	0.45	LIVE	47.04	316.79	0.46
131	0.9	LIVE	47.04	316.79	0.46
131	0.	SX	107.77	581.81	2.9
131	0.45	SX	107.77	581.81	2.9
131	0.9	SX	107.77	581.81	2.9
131	0.	SY	303.58	576.63	3.94
131	0.45	SY	303.58	576.63	3.94
131	0.9	SY	303.58	576.63	3.94
131	0.	WB	0.16	-0.15	4.070E-03
131	0.45	WB	0.16	-0.15	4.070E-03
131	0.9	WB	0.16	-0.15	4.070E-03
132	0.	DEAD	69.05	909.26	0.49
132	0.45	DEAD	69.05	934.94	0.49
132	0.9	DEAD	69.05	960.62	0.49
132	0.	LIVE	61.99	787.62	0.42
132	0.45	LIVE	61.99	787.62	0.42
132	0.9	LIVE	61.99	787.62	0.42
132	0.	SX	51.52	625.04	2.49

Table 30: Element Forces - Frames, Part 1 of 2

Frame	Station	OutputCase	P	V2	V3
	m		Kgf	Kgf	Kgf
132	0.45	SX	51.52	625.04	2.49
132	0.9	SX	51.52	625.04	2.49
132	0.	SY	214.68	621.65	3.59
132	0.45	SY	214.68	621.65	3.59
132	0.9	SY	214.68	621.65	3.59
132	0.	WB	0.26	-0.19	3.541E-03
132	0.45	WB	0.26	-0.19	3.541E-03
132	0.9	WB	0.26	-0.19	3.541E-03
133	0.	DEAD	101.5	1360.29	2.29
133	0.3075	DEAD	101.5	1377.84	2.29
133	0.615	DEAD	101.5	1395.39	2.29
133	0.	LIVE	90.17	1159.2	1.85
133	0.3075	LIVE	90.17	1159.2	1.85
133	0.615	LIVE	90.17	1159.2	1.85
133	0.	SX	69.34	692.6	3.72
133	0.3075	SX	69.34	692.6	3.72
133	0.615	SX	69.34	692.6	3.72
133	0.	SY	190.61	707.65	4.71
133	0.3075	SY	190.61	707.65	4.71
133	0.615	SY	190.61	707.65	4.71
133	0.	WB	0.38	-0.2	5.805E-03
133	0.3075	WB	0.38	-0.2	5.805E-03
133	0.615	WB	0.38	-0.2	5.805E-03
134	0.	DEAD	88.76	-1308.91	0.91
134	0.4675	DEAD	88.76	-1282.23	0.91
134	0.935	DEAD	88.76	-1255.56	0.91
134	0.	LIVE	75.12	-1106.22	0.77
134	0.4675	LIVE	75.12	-1106.22	0.77
134	0.935	LIVE	75.12	-1106.22	0.77
134	0.	SX	34.3	655.68	1.29
134	0.4675	SX	34.3	655.68	1.29
134	0.935	SX	34.3	655.68	1.29
134	0.	SY	59.53	266.85	1.39
134	0.4675	SY	59.53	266.85	1.39
134	0.935	SY	59.53	266.85	1.39
134	0.	WB	0.49	-0.6	5.703E-03
134	0.4675	WB	0.49	-0.6	5.703E-03
134	0.935	WB	0.49	-0.6	5.703E-03
135	0.	DEAD	74.49	-779.6	3.15
135	0.33238	DEAD	74.49	-760.63	3.15
135	0.66477	DEAD	74.49	-741.67	3.15
135	0.	LIVE	61.9	-660.23	4.79
135	0.33238	LIVE	61.9	-660.23	4.79
135	0.66477	LIVE	61.9	-660.23	4.79
135	0.	SX	30.39	598.28	19.59
135	0.33238	SX	30.39	598.28	19.59
135	0.66477	SX	30.39	598.28	19.59
135	0.	SY	27.27	205.48	31.82
135	0.33238	SY	27.27	205.48	31.82
135	0.66477	SY	27.27	205.48	31.82
135	0.	WB	0.37	-0.58	0.25
135	0.33238	WB	0.37	-0.58	0.25
135	0.66477	WB	0.37	-0.58	0.25
136	0.	DEAD	9.37	-523.7	-11.05

Table 30: Element Forces - Frames, Part 1 of 2

Frame	Station	OutputCase	P	V2	V3
	m		Kgf	Kgf	Kgf
136	0.23523	DEAD	9.37	-510.28	-11.05
136	0.	LIVE	9.93	-453.93	-22.48
136	0.23523	LIVE	9.93	-453.93	-22.48
136	0.	SX	116.03	593.27	124.08
136	0.23523	SX	116.03	593.27	124.08
136	0.	SY	106.34	205.37	200.82
136	0.23523	SY	106.34	205.37	200.82
136	0.	WB	0.21	-0.57	-1.51
136	0.23523	WB	0.21	-0.57	-1.51
137	0.	DEAD	27.67	4.08	0.19
137	0.45	DEAD	27.67	29.76	0.19
137	0.9	DEAD	27.67	55.44	0.19
137	0.	LIVE	22.45	20.22	0.25
137	0.45	LIVE	22.45	20.22	0.25
137	0.9	LIVE	22.45	20.22	0.25
137	0.	SX	22.15	560.58	0.84
137	0.45	SX	22.15	560.58	0.84
137	0.9	SX	22.15	560.58	0.84
137	0.	SY	47.62	205.32	0.29
137	0.45	SY	47.62	205.32	0.29
137	0.9	SY	47.62	205.32	0.29
137	0.	WB	0.13	-0.59	8.417E-03
137	0.45	WB	0.13	-0.59	8.417E-03
137	0.9	WB	0.13	-0.59	8.417E-03
138	0.	DEAD	24.44	568.78	-7.711E-02
138	0.45	DEAD	24.44	594.46	-7.711E-02
138	0.9	DEAD	24.44	620.14	-7.711E-02
138	0.	LIVE	18.84	492.93	-5.618E-02
138	0.45	LIVE	18.84	492.93	-5.618E-02
138	0.9	LIVE	18.84	492.93	-5.618E-02
138	0.	SX	19.38	563.53	1.46
138	0.45	SX	19.38	563.53	1.46
138	0.9	SX	19.38	563.53	1.46
138	0.	SY	34.71	228.53	0.85
138	0.45	SY	34.71	228.53	0.85
138	0.9	SY	34.71	228.53	0.85
138	0.	WB	7.840E-02	-0.72	-1.249E-03
138	0.45	WB	7.840E-02	-0.72	-1.249E-03
138	0.9	WB	7.840E-02	-0.72	-1.249E-03
139	0.	DEAD	39.79	1114.93	-59.81
139	0.17152	DEAD	39.79	1124.72	-59.81
139	0.	LIVE	31.12	948.61	-41.91
139	0.17152	LIVE	31.12	948.61	-41.91
139	0.	SX	150.01	594.93	54.23
139	0.17152	SX	150.01	594.93	54.23
139	0.	SY	90.38	240.38	188.75
139	0.17152	SY	90.38	240.38	188.75
139	0.	WB	0.19	-1.06	0.73
139	0.17152	WB	0.19	-1.06	0.73
140	0.	DEAD	12.71	639.78	2.87
140	0.36424	DEAD	12.71	660.56	2.87
140	0.72848	DEAD	12.71	681.34	2.87
140	0.	LIVE	7.42	630.48	1.9
140	0.36424	LIVE	7.42	630.48	1.9

Table 30: Element Forces - Frames, Part 1 of 2

Frame	Station	OutputCase	P	V2	V3
	m		Kgf	Kgf	Kgf
140	0.72848	LIVE	7.42	630.48	1.9
140	0.	SX	57.47	771.17	4.54
140	0.36424	SX	57.47	771.17	4.54
140	0.72848	SX	57.47	771.17	4.54
140	0.	SY	19.52	1195.41	15.25
140	0.36424	SY	19.52	1195.41	15.25
140	0.72848	SY	19.52	1195.41	15.25
140	0.	WB	-0.16	4.03	-4.887E-02
140	0.36424	WB	-0.16	4.03	-4.887E-02
140	0.72848	WB	-0.16	4.03	-4.887E-02
141	0.	DEAD	24.66	1035.23	-5.92
141	0.465	DEAD	24.66	1061.76	-5.92
141	0.	LIVE	16.49	956.44	-4.42
141	0.465	LIVE	16.49	956.44	-4.42
141	0.	SX	15.72	800.41	5.04
141	0.465	SX	15.72	800.41	5.04
141	0.	SY	33.91	1289.25	8.15
141	0.465	SY	33.91	1289.25	8.15
141	0.	WB	-0.17	3.67	3.727E-02
141	0.465	WB	-0.17	3.67	3.727E-02
142	0.	DEAD	39.59	-1345.31	5.12
142	0.435	DEAD	39.59	-1320.49	5.12
142	0.	LIVE	40.18	-1395.22	3.78
142	0.435	LIVE	40.18	-1395.22	3.78
142	0.	SX	51.43	936.63	11.09
142	0.435	SX	51.43	936.63	11.09
142	0.	SY	108.64	306.02	25.43
142	0.435	SY	108.64	306.02	25.43
142	0.	WB	0.75	-26.39	-4.412E-02
142	0.435	WB	0.75	-26.39	-4.412E-02
143	0.	DEAD	32.66	-1010.42	0.1
143	0.45	DEAD	32.66	-984.74	0.1
143	0.9	DEAD	32.66	-959.06	0.1
143	0.	LIVE	34.75	-1107.21	7.400E-02
143	0.45	LIVE	34.75	-1107.21	7.400E-02
143	0.9	LIVE	34.75	-1107.21	7.400E-02
143	0.	SX	68.28	893.59	1.22
143	0.45	SX	68.28	893.59	1.22
143	0.9	SX	68.28	893.59	1.22
143	0.	SY	54.72	299.86	2.72
143	0.45	SY	54.72	299.86	2.72
143	0.9	SY	54.72	299.86	2.72
143	0.	WB	0.8	-26.71	-2.579E-03
143	0.45	WB	0.8	-26.71	-2.579E-03
143	0.9	WB	0.8	-26.71	-2.579E-03
144	0.	DEAD	36.51	-564.56	-24.83
144	0.17044	DEAD	36.51	-554.83	-24.83
144	0.	LIVE	39.89	-743.91	-23.15
144	0.17044	LIVE	39.89	-743.91	-23.15
144	0.	SX	198.68	864.3	17.19
144	0.17044	SX	198.68	864.3	17.19
144	0.	SY	213.92	297.7	70.03
144	0.17044	SY	213.92	297.7	70.03
144	0.	WB	1.11	-27.7	-0.36

Table 30: Element Forces - Frames, Part 1 of 2

Frame	Station	OutputCase	P	V2	V3
	m		Kgf	Kgf	Kgf
144	0.17044	WB	1.11	-27.7	-0.36
145	0.	DEAD	21.36	-113.98	2.38
145	0.36478	DEAD	21.36	-93.16	2.38
145	0.72956	DEAD	21.36	-72.35	2.38
145	0.	LIVE	23.89	-79.21	2.26
145	0.36478	LIVE	23.89	-79.21	2.26
145	0.72956	LIVE	23.89	-79.21	2.26
145	0.	SX	38.61	740.37	4.14
145	0.36478	SX	38.61	740.37	4.14
145	0.72956	SX	38.61	740.37	4.14
145	0.	SY	127.59	276.53	7.14
145	0.36478	SY	127.59	276.53	7.14
145	0.72956	SY	127.59	276.53	7.14
145	0.	WB	0.62	0.43	3.613E-02
145	0.36478	WB	0.62	0.43	3.613E-02
145	0.72956	WB	0.62	0.43	3.613E-02
146	0.	DEAD	20.18	324.94	-12.95
146	0.34744	DEAD	20.18	344.77	-12.95
146	0.	LIVE	20.45	284.43	-12.41
146	0.34744	LIVE	20.45	284.43	-12.41
146	0.	SX	108.75	748.9	14.26
146	0.34744	SX	108.75	748.9	14.26
146	0.	SY	144.59	292.09	14.34
146	0.34744	SY	144.59	292.09	14.34
146	0.	WB	0.44	-0.72	-0.21
146	0.34744	WB	0.44	-0.72	-0.21
147	0.	DEAD	49.04	1089.11	1.78
147	0.27628	DEAD	49.04	1104.88	1.78
147	0.55256	DEAD	49.04	1120.64	1.78
147	0.	LIVE	52.18	1335.42	2.4
147	0.27628	LIVE	52.18	1335.42	2.4
147	0.55256	LIVE	52.18	1335.42	2.4
147	0.	SX	72.74	871.34	32.98
147	0.27628	SX	72.74	871.34	32.98
147	0.55256	SX	72.74	871.34	32.98
147	0.	SY	238.66	323.08	46.21
147	0.27628	SY	238.66	323.08	46.21
147	0.55256	SY	238.66	323.08	46.21
147	0.	WB	1.23	40.84	8.727E-02
147	0.27628	WB	1.23	40.84	8.727E-02
147	0.55256	WB	1.23	40.84	8.727E-02
148	0.	DEAD	52.57	1483.46	-3.32
148	0.3325	DEAD	52.57	1502.43	-3.32
148	0.665	DEAD	52.57	1521.4	-3.32
148	0.	LIVE	53.06	1676.11	-2.69
148	0.3325	LIVE	53.06	1676.11	-2.69
148	0.665	LIVE	53.06	1676.11	-2.69
148	0.	SX	72.5	894.24	2.67
148	0.3325	SX	72.5	894.24	2.67
148	0.665	SX	72.5	894.24	2.67
148	0.	SY	74.09	389.39	5.39
148	0.3325	SY	74.09	389.39	5.39
148	0.665	SY	74.09	389.39	5.39
148	0.	WB	1.06	40.65	2.219E-03

Table 30: Element Forces - Frames, Part 1 of 2

Frame	Station	OutputCase	P	V2	V3
	m		Kgf	Kgf	Kgf
148	0.3325	WB	1.06	40.65	2.219E-03
148	0.665	WB	1.06	40.65	2.219E-03
149	0.	DEAD	33.69	-1172.87	1.11
149	0.34503	DEAD	33.69	-1153.18	1.11
149	0.69005	DEAD	33.69	-1133.49	1.11
149	1.03508	DEAD	33.69	-1113.81	1.11
149	0.	LIVE	35.7	-1361.95	0.89
149	0.34503	LIVE	35.7	-1361.95	0.89
149	0.69005	LIVE	35.7	-1361.95	0.89
149	1.03508	LIVE	35.7	-1361.95	0.89
149	0.	SX	184.73	1286.02	2.06
149	0.34503	SX	184.73	1286.02	2.06
149	0.69005	SX	184.73	1286.02	2.06
149	1.03508	SX	184.73	1286.02	2.06
149	0.	SY	87.56	449.14	3.96
149	0.34503	SY	87.56	449.14	3.96
149	0.69005	SY	87.56	449.14	3.96
149	1.03508	SY	87.56	449.14	3.96
149	0.	WB	0.97	-38.37	-4.294E-03
149	0.34503	WB	0.97	-38.37	-4.294E-03
149	0.69005	WB	0.97	-38.37	-4.294E-03
149	1.03508	WB	0.97	-38.37	-4.294E-03
150	0.	DEAD	32.64	-701.58	-6.45
150	0.12932	DEAD	32.64	-694.2	-6.45
150	0.	LIVE	34.94	-968.31	-7.14
150	0.12932	LIVE	34.94	-968.31	-7.14
150	0.	SX	419.39	1247.56	86.7
150	0.12932	SX	419.39	1247.56	86.7
150	0.	SY	446.5	472.87	296.54
150	0.12932	SY	446.5	472.87	296.54
150	0.	WB	1.18	-38.69	-0.2
150	0.12932	WB	1.18	-38.69	-0.2
151	0.	DEAD	19.94	-94.23	1.92
151	0.38534	DEAD	19.94	-72.25	1.92
151	0.77068	DEAD	19.94	-50.26	1.92
151	0.	LIVE	25.8	-111.32	1.92
151	0.38534	LIVE	25.8	-111.32	1.92
151	0.77068	LIVE	25.8	-111.32	1.92
151	0.	SX	70.81	1207.25	1.91
151	0.38534	SX	70.81	1207.25	1.91
151	0.77068	SX	70.81	1207.25	1.91
151	0.	SY	93.03	456.39	3.71
151	0.38534	SY	93.03	456.39	3.71
151	0.77068	SY	93.03	456.39	3.71
151	0.	WB	1.	-4.98	3.445E-02
151	0.38534	WB	1.	-4.98	3.445E-02
151	0.77068	WB	1.	-4.98	3.445E-02
152	0.	DEAD	17.	347.33	-4.79
152	0.30632	DEAD	17.	364.81	-4.79
152	0.	LIVE	17.53	264.47	-7.97
152	0.30632	LIVE	17.53	264.47	-7.97
152	0.	SX	206.3	1217.5	15.05
152	0.30632	SX	206.3	1217.5	15.05
152	0.	SY	258.65	505.82	70.98

Table 30: Element Forces - Frames, Part 1 of 2

Frame	Station	OutputCase	P	V2	V3
	m		Kgf	Kgf	Kgf
152	0.30632	SY	258.65	505.82	70.98
152	0.	WB	0.51	-5.88	-0.41
152	0.30632	WB	0.51	-5.88	-0.41
153	0.	DEAD	40.52	1683.28	-2.37
153	0.36438	DEAD	40.52	1704.07	-2.37
153	0.72876	DEAD	40.52	1724.86	-2.37
153	0.	LIVE	51.95	2144.5	-0.55
153	0.36438	LIVE	51.95	2144.5	-0.55
153	0.72876	LIVE	51.95	2144.5	-0.55
153	0.	SX	100.49	1175.77	25.96
153	0.36438	SX	100.49	1175.77	25.96
153	0.72876	SX	100.49	1175.77	25.96
153	0.	SY	207.89	510.91	29.67
153	0.36438	SY	207.89	510.91	29.67
153	0.72876	SY	207.89	510.91	29.67
153	0.	WB	1.91	69.77	0.12
153	0.36438	WB	1.91	69.77	0.12
153	0.72876	WB	1.91	69.77	0.12
154	0.	DEAD	6.5	-640.04	1.64
154	0.4675	DEAD	6.5	-613.36	1.64
154	0.935	DEAD	6.5	-586.68	1.64
154	0.	LIVE	-4.41	-538.85	1.29
154	0.4675	LIVE	-4.41	-538.85	1.29
154	0.935	LIVE	-4.41	-538.85	1.29
154	0.	SX	212.76	962.55	2.18
154	0.4675	SX	212.76	962.55	2.18
154	0.935	SX	212.76	962.55	2.18
154	0.	SY	69.55	342.59	3.45
154	0.4675	SY	69.55	342.59	3.45
154	0.935	SY	69.55	342.59	3.45
154	0.	WB	-0.7	-2.47	-8.633E-03
154	0.4675	WB	-0.7	-2.47	-8.633E-03
154	0.935	WB	-0.7	-2.47	-8.633E-03
155	0.	DEAD	-9.39	-178.76	2.000E-02
155	0.45	DEAD	-9.39	-153.08	2.000E-02
155	0.9	DEAD	-9.39	-127.4	2.000E-02
155	0.	LIVE	-17.03	-147.29	6.517E-02
155	0.45	LIVE	-17.03	-147.29	6.517E-02
155	0.9	LIVE	-17.03	-147.29	6.517E-02
155	0.	SX	266.53	921.3	3.02
155	0.45	SX	266.53	921.3	3.02
155	0.9	SX	266.53	921.3	3.02
155	0.	SY	132.85	345.37	5.38
155	0.45	SY	132.85	345.37	5.38
155	0.9	SY	132.85	345.37	5.38
155	0.	WB	-0.61	-2.34	3.141E-03
155	0.45	WB	-0.61	-2.34	3.141E-03
155	0.9	WB	-0.61	-2.34	3.141E-03
156	0.	DEAD	-18.39	275.26	0.53
156	0.45	DEAD	-18.39	300.94	0.53
156	0.9	DEAD	-18.39	326.62	0.53
156	0.	LIVE	-25.18	232.1	0.43
156	0.45	LIVE	-25.18	232.1	0.43
156	0.9	LIVE	-25.18	232.1	0.43

Table 30: Element Forces - Frames, Part 1 of 2

Frame	Station	OutputCase	P	V2	V3
	m		Kgf	Kgf	Kgf
156	0.	SX	337.78	930.56	2.48
156	0.45	SX	337.78	930.56	2.48
156	0.9	SX	337.78	930.56	2.48
156	0.	SY	245.65	355.34	3.13
156	0.45	SY	245.65	355.34	3.13
156	0.9	SY	245.65	355.34	3.13
156	0.	WB	-0.63	-2.52	-2.083E-03
156	0.45	WB	-0.63	-2.52	-2.083E-03
156	0.9	WB	-0.63	-2.52	-2.083E-03
157	0.	DEAD	-18.59	702.2	-1.07
157	0.4325	DEAD	-18.59	726.88	-1.07
157	0.865	DEAD	-18.59	751.56	-1.07
157	0.	LIVE	-26.48	586.05	-0.68
157	0.4325	LIVE	-26.48	586.05	-0.68
157	0.865	LIVE	-26.48	586.05	-0.68
157	0.	SX	416.09	983.75	6.54
157	0.4325	SX	416.09	983.75	6.54
157	0.865	SX	416.09	983.75	6.54
157	0.	SY	359.39	379.58	12.31
157	0.4325	SY	359.39	379.58	12.31
157	0.865	SY	359.39	379.58	12.31
157	0.	WB	-0.7	-3.22	1.709E-02
157	0.4325	WB	-0.7	-3.22	1.709E-02
157	0.865	WB	-0.7	-3.22	1.709E-02
158	0.	DEAD	95.7	-1852.47	0.65
158	0.46751	DEAD	95.7	-1825.8	0.65
158	0.93501	DEAD	95.7	-1799.12	0.65
158	0.	LIVE	76.41	-1594.22	0.52
158	0.46751	LIVE	76.41	-1594.22	0.52
158	0.93501	LIVE	76.41	-1594.22	0.52
158	0.	SX	231.83	397.97	5.77
158	0.46751	SX	231.83	397.97	5.77
158	0.93501	SX	231.83	397.97	5.77
158	0.	SY	167.04	200.65	6.17
158	0.46751	SY	167.04	200.65	6.17
158	0.93501	SY	167.04	200.65	6.17
158	0.	WB	-0.23	0.72	-2.847E-03
158	0.46751	WB	-0.23	0.72	-2.847E-03
158	0.93501	WB	-0.23	0.72	-2.847E-03
159	0.	DEAD	95.45	-1259.98	-4.212E-02
159	0.45	DEAD	95.45	-1234.3	-4.212E-02
159	0.90001	DEAD	95.45	-1208.62	-4.212E-02
159	0.	LIVE	79.59	-1034.9	8.263E-02
159	0.45	LIVE	79.59	-1034.9	8.263E-02
159	0.90001	LIVE	79.59	-1034.9	8.263E-02
159	0.	SX	163.16	367.76	2.9
159	0.45	SX	163.16	367.76	2.9
159	0.90001	SX	163.16	367.76	2.9
159	0.	SY	226.65	198.11	4.07
159	0.45	SY	226.65	198.11	4.07
159	0.90001	SY	226.65	198.11	4.07
159	0.	WB	0.13	3.72	1.188E-02
159	0.45	WB	0.13	3.72	1.188E-02
159	0.90001	WB	0.13	3.72	1.188E-02

Table 30: Element Forces - Frames, Part 1 of 2

Frame	Station	OutputCase	P	V2	V3
	m		Kgf	Kgf	Kgf
160	0.	DEAD	67.07	-612.69	7.720E-02
160	0.45	DEAD	67.07	-587.01	7.720E-02
160	0.90001	DEAD	67.07	-561.33	7.720E-02
160	0.	LIVE	58.59	-505.2	7.122E-02
160	0.45	LIVE	58.59	-505.2	7.122E-02
160	0.90001	LIVE	58.59	-505.2	7.122E-02
160	0.	SX	102.01	364.21	3.89
160	0.45	SX	102.01	364.21	3.89
160	0.90001	SX	102.01	364.21	3.89
160	0.	SY	211.19	144.82	6.39
160	0.45	SY	211.19	144.82	6.39
160	0.90001	SY	211.19	144.82	6.39
160	0.	WB	0.34	0.18	3.655E-03
160	0.45	WB	0.34	0.18	3.655E-03
160	0.90001	WB	0.34	0.18	3.655E-03
161	0.	DEAD	73.37	288.1	-7.334E-02
161	0.45001	DEAD	73.37	313.77	-7.334E-02
161	0.90001	DEAD	73.37	339.45	-7.334E-02
161	0.	LIVE	63.47	271.33	-5.853E-02
161	0.45001	LIVE	63.47	271.33	-5.853E-02
161	0.90001	LIVE	63.47	271.33	-5.853E-02
161	0.	SX	73.42	504.86	1.85
161	0.45001	SX	73.42	504.86	1.85
161	0.90001	SX	73.42	504.86	1.85
161	0.	SY	149.77	176.86	3.29
161	0.45001	SY	149.77	176.86	3.29
161	0.90001	SY	149.77	176.86	3.29
161	0.	WB	0.2	-0.71	-3.657E-04
161	0.45001	WB	0.2	-0.71	-3.657E-04
161	0.90001	WB	0.2	-0.71	-3.657E-04
162	0.	DEAD	86.36	1355.41	-0.42
162	0.45	DEAD	86.36	1381.09	-0.42
162	0.90001	DEAD	86.36	1406.77	-0.42
162	0.	LIVE	74.54	1192.21	-0.36
162	0.45	LIVE	74.54	1192.21	-0.36
162	0.90001	LIVE	74.54	1192.21	-0.36
162	0.	SX	62.24	743.88	1.83
162	0.45	SX	62.24	743.88	1.83
162	0.90001	SX	62.24	743.88	1.83
162	0.	SY	99.12	259.87	3.34
162	0.45	SY	99.12	259.87	3.34
162	0.90001	SY	99.12	259.87	3.34
162	0.	WB	0.1	-0.83	2.353E-05
162	0.45	WB	0.1	-0.83	2.353E-05
162	0.90001	WB	0.1	-0.83	2.353E-05
163	0.	DEAD	95.23	2601.68	-0.31
163	0.41433	DEAD	95.23	2625.32	-0.31
163	0.82866	DEAD	95.23	2648.96	-0.31
163	0.	LIVE	82.33	2269.18	-0.26
163	0.41433	LIVE	82.33	2269.18	-0.26
163	0.82866	LIVE	82.33	2269.18	-0.26
163	0.	SX	62.11	1077.4	1.61
163	0.41433	SX	62.11	1077.4	1.61
163	0.82866	SX	62.11	1077.4	1.61

Table 30: Element Forces - Frames, Part 1 of 2

Frame	Station	OutputCase	P	V2	V3
	m		Kgf	Kgf	Kgf
163	0.	SY	80.92	374.38	3.07
163	0.41433	SY	80.92	374.38	3.07
163	0.82866	SY	80.92	374.38	3.07
163	0.	WB	9.369E-02	-0.92	-5.130E-04
163	0.41433	WB	9.369E-02	-0.92	-5.130E-04
163	0.82866	WB	9.369E-02	-0.92	-5.130E-04
164	0.	DEAD	42.03	-786.32	0.6
164	0.4675	DEAD	42.03	-759.64	0.6
164	0.935	DEAD	42.03	-732.97	0.6
164	0.	LIVE	35.79	-636.94	0.44
164	0.4675	LIVE	35.79	-636.94	0.44
164	0.935	LIVE	35.79	-636.94	0.44
164	0.	SX	25.1	1113.49	0.68
164	0.4675	SX	25.1	1113.49	0.68
164	0.935	SX	25.1	1113.49	0.68
164	0.	SY	84.4	893.92	0.92
164	0.4675	SY	84.4	893.92	0.92
164	0.935	SY	84.4	893.92	0.92
164	0.	WB	5.819E-02	-0.97	-2.305E-03
164	0.4675	WB	5.819E-02	-0.97	-2.305E-03
164	0.935	WB	5.819E-02	-0.97	-2.305E-03
165	0.	DEAD	27.11	-313.27	0.11
165	0.45	DEAD	27.11	-287.59	0.11
165	0.9	DEAD	27.11	-261.91	0.11
165	0.	LIVE	23.48	-244.71	0.1
165	0.45	LIVE	23.48	-244.71	0.1
165	0.9	LIVE	23.48	-244.71	0.1
165	0.	SX	7.35	1045.3	0.5
165	0.45	SX	7.35	1045.3	0.5
165	0.9	SX	7.35	1045.3	0.5
165	0.	SY	28.78	755.26	1.74
165	0.45	SY	28.78	755.26	1.74
165	0.9	SY	28.78	755.26	1.74
165	0.	WB	1.061E-02	-0.83	4.106E-04
165	0.45	WB	1.061E-02	-0.83	4.106E-04
165	0.9	WB	1.061E-02	-0.83	4.106E-04
166	0.	DEAD	25.33	177.7	3.912E-02
166	0.45	DEAD	25.33	203.37	3.912E-02
166	0.9	DEAD	25.33	229.05	3.912E-02
166	0.	LIVE	22.26	160.96	1.386E-02
166	0.45	LIVE	22.26	160.96	1.386E-02
166	0.9	LIVE	22.26	160.96	1.386E-02
166	0.	SX	15.76	1043.42	0.68
166	0.45	SX	15.76	1043.42	0.68
166	0.9	SX	15.76	1043.42	0.68
166	0.	SY	36.15	759.48	2.51
166	0.45	SY	36.15	759.48	2.51
166	0.9	SY	36.15	759.48	2.51
166	0.	WB	4.552E-02	-0.73	-1.969E-03
166	0.45	WB	4.552E-02	-0.73	-1.969E-03
166	0.9	WB	4.552E-02	-0.73	-1.969E-03
167	0.	DEAD	34.62	672.78	-0.39
167	0.35717	DEAD	34.62	693.16	-0.39
167	0.71435	DEAD	34.62	713.54	-0.39

Table 30: Element Forces - Frames, Part 1 of 2

Frame	Station	OutputCase	P	V2	V3
	m		Kgf	Kgf	Kgf
167	1.07152	DEAD	34.62	733.92	-0.39
167	0.	LIVE	29.81	577.7	-0.3
167	0.35717	LIVE	29.81	577.7	-0.3
167	0.71435	LIVE	29.81	577.7	-0.3
167	1.07152	LIVE	29.81	577.7	-0.3
167	0.	SX	32.9	1096.96	0.23
167	0.35717	SX	32.9	1096.96	0.23
167	0.71435	SX	32.9	1096.96	0.23
167	1.07152	SX	32.9	1096.96	0.23
167	0.	SY	91.47	748.51	0.79
167	0.35717	SY	91.47	748.51	0.79
167	0.71435	SY	91.47	748.51	0.79
167	1.07152	SY	91.47	748.51	0.79
167	0.	WB	6.813E-02	-0.62	1.079E-03
167	0.35717	WB	6.813E-02	-0.62	1.079E-03
167	0.71435	WB	6.813E-02	-0.62	1.079E-03
167	1.07152	WB	6.813E-02	-0.62	1.079E-03
170	0.	DEAD	53.74	-936.42	-0.69
170	0.4675	DEAD	53.74	-909.74	-0.69
170	0.935	DEAD	53.74	-883.07	-0.69
170	0.	LIVE	46.41	-781.03	-0.54
170	0.4675	LIVE	46.41	-781.03	-0.54
170	0.935	LIVE	46.41	-781.03	-0.54
170	0.	SX	37.06	1078.62	0.29
170	0.4675	SX	37.06	1078.62	0.29
170	0.935	SX	37.06	1078.62	0.29
170	0.	SY	16.57	354.2	0.31
170	0.4675	SY	16.57	354.2	0.31
170	0.935	SY	16.57	354.2	0.31
170	0.	WB	0.44	-1.16	-4.860E-04
170	0.4675	WB	0.44	-1.16	-4.860E-04
170	0.935	WB	0.44	-1.16	-4.860E-04
171	0.	DEAD	38.18	-459.01	-6.34
171	0.33238	DEAD	38.18	-440.04	-6.34
171	0.66477	DEAD	38.18	-421.08	-6.34
171	0.	LIVE	32.91	-385.45	-7.36
171	0.33238	LIVE	32.91	-385.45	-7.36
171	0.66477	LIVE	32.91	-385.45	-7.36
171	0.	SX	51.16	1031.3	39.03
171	0.33238	SX	51.16	1031.3	39.03
171	0.66477	SX	51.16	1031.3	39.03
171	0.	SY	37.98	323.21	49.08
171	0.33238	SY	37.98	323.21	49.08
171	0.66477	SY	37.98	323.21	49.08
171	0.	WB	0.32	-1.12	-0.26
171	0.33238	WB	0.32	-1.12	-0.26
171	0.66477	WB	0.32	-1.12	-0.26
172	0.	DEAD	30.85	-202.13	45.92
172	0.23523	DEAD	30.85	-188.71	45.92
172	0.	LIVE	27.34	-177.96	51.
172	0.23523	LIVE	27.34	-177.96	51.
172	0.	SX	82.66	1037.06	274.72
172	0.23523	SX	82.66	1037.06	274.72
172	0.	SY	66.53	325.21	351.65

Table 30: Element Forces - Frames, Part 1 of 2

Frame	Station	OutputCase	P	V2	V3
	m		Kgf	Kgf	Kgf
172	0.23523	SY	66.53	325.21	351.65
172	0.	WB	0.33	-1.13	1.64
172	0.23523	WB	0.33	-1.13	1.64
173	0.	DEAD	32.34	259.52	2.016E-03
173	0.45	DEAD	32.34	285.2	2.016E-03
173	0.9	DEAD	32.34	310.88	2.016E-03
173	0.	LIVE	27.94	235.75	-4.706E-02
173	0.45	LIVE	27.94	235.75	-4.706E-02
173	0.9	LIVE	27.94	235.75	-4.706E-02
173	0.	SX	42.67	1033.72	0.34
173	0.45	SX	42.67	1033.72	0.34
173	0.9	SX	42.67	1033.72	0.34
173	0.	SY	38.19	326.32	0.32
173	0.45	SY	38.19	326.32	0.32
173	0.9	SY	38.19	326.32	0.32
173	0.	WB	0.29	-1.02	-5.563E-03
173	0.45	WB	0.29	-1.02	-5.563E-03
173	0.9	WB	0.29	-1.02	-5.563E-03
174	0.	DEAD	44.14	745.35	0.36
174	0.35717	DEAD	44.14	765.73	0.36
174	0.71435	DEAD	44.14	786.11	0.36
174	1.07152	DEAD	44.14	806.49	0.36
174	0.	LIVE	37.8	646.92	0.33
174	0.35717	LIVE	37.8	646.92	0.33
174	0.71435	LIVE	37.8	646.92	0.33
174	1.07152	LIVE	37.8	646.92	0.33
174	0.	SX	60.63	1092.16	0.94
174	0.35717	SX	60.63	1092.16	0.94
174	0.71435	SX	60.63	1092.16	0.94
174	1.07152	SX	60.63	1092.16	0.94
174	0.	SY	65.28	342.97	2.37
174	0.35717	SY	65.28	342.97	2.37
174	0.71435	SY	65.28	342.97	2.37
174	1.07152	SY	65.28	342.97	2.37
174	0.	WB	0.35	-0.82	5.181E-03
174	0.35717	WB	0.35	-0.82	5.181E-03
174	0.71435	WB	0.35	-0.82	5.181E-03
174	1.07152	WB	0.35	-0.82	5.181E-03
183	0.	DEAD	23.11	-385.49	0.2
183	0.34577	DEAD	23.11	-370.89	0.2
183	0.69154	DEAD	23.11	-356.29	0.2
183	0.	LIVE	18.9	-507.8	0.15
183	0.34577	LIVE	18.9	-507.8	0.15
183	0.69154	LIVE	18.9	-507.8	0.15
183	0.	SX	87.67	8.72	1.36
183	0.34577	SX	87.67	8.72	1.36
183	0.69154	SX	87.67	8.72	1.36
183	0.	SY	46.91	47.13	2.05
183	0.34577	SY	46.91	47.13	2.05
183	0.69154	SY	46.91	47.13	2.05
183	0.	WB	0.11	-19.04	-2.083E-03
183	0.34577	WB	0.11	-19.04	-2.083E-03
183	0.69154	WB	0.11	-19.04	-2.083E-03
184	0.	DEAD	27.37	170.32	0.16

Table 30: Element Forces - Frames, Part 1 of 2

Frame	Station	OutputCase	P	V2	V3
	m		Kgf	Kgf	Kgf
184	0.43988	DEAD	27.37	188.89	0.16
184	0.87976	DEAD	27.37	207.47	0.16
184	0.	LIVE	25.86	318.79	0.18
184	0.43988	LIVE	25.86	318.79	0.18
184	0.87976	LIVE	25.86	318.79	0.18
184	0.	SX	102.82	91.05	1.35
184	0.43988	SX	102.82	91.05	1.35
184	0.87976	SX	102.82	91.05	1.35
184	0.	SY	35.59	80.16	2.65
184	0.43988	SY	35.59	80.16	2.65
184	0.87976	SY	35.59	80.16	2.65
184	0.	WB	0.49	14.57	4.625E-03
184	0.43988	WB	0.49	14.57	4.625E-03
184	0.87976	WB	0.49	14.57	4.625E-03
185	0.	DEAD	24.17	146.94	-2.584E-02
185	0.359	DEAD	24.17	162.1	-2.584E-02
185	0.718	DEAD	24.17	177.26	-2.584E-02
185	1.077	DEAD	24.17	192.42	-2.584E-02
185	0.	LIVE	22.85	213.34	-1.678E-02
185	0.359	LIVE	22.85	213.34	-1.678E-02
185	0.718	LIVE	22.85	213.34	-1.678E-02
185	1.077	LIVE	22.85	213.34	-1.678E-02
185	0.	SX	118.65	118.25	0.19
185	0.359	SX	118.65	118.25	0.19
185	0.718	SX	118.65	118.25	0.19
185	1.077	SX	118.65	118.25	0.19
185	0.	SY	61.99	37.36	0.34
185	0.359	SY	61.99	37.36	0.34
185	0.718	SY	61.99	37.36	0.34
185	1.077	SY	61.99	37.36	0.34
185	0.	WB	0.45	7.28	5.323E-04
185	0.359	WB	0.45	7.28	5.323E-04
185	0.718	WB	0.45	7.28	5.323E-04
185	1.077	WB	0.45	7.28	5.323E-04
186	0.	DEAD	27.74	-518.97	2.797E-02
186	0.38571	DEAD	27.74	-502.68	2.797E-02
186	0.77141	DEAD	27.74	-486.39	2.797E-02
186	0.	LIVE	27.18	-739.64	5.432E-02
186	0.38571	LIVE	27.18	-739.64	5.432E-02
186	0.77141	LIVE	27.18	-739.64	5.432E-02
186	0.	SX	138.35	81.1	1.87
186	0.38571	SX	138.35	81.1	1.87
186	0.77141	SX	138.35	81.1	1.87
186	0.	SY	75.29	28.88	4.72
186	0.38571	SY	75.29	28.88	4.72
186	0.77141	SY	75.29	28.88	4.72
186	0.	WB	0.61	-29.94	2.388E-03
186	0.38571	WB	0.61	-29.94	2.388E-03
186	0.77141	WB	0.61	-29.94	2.388E-03
187	0.	DEAD	25.19	87.79	-3.534E-02
187	0.45	DEAD	25.19	106.79	-3.534E-02
187	0.9	DEAD	25.19	125.8	-3.534E-02
187	0.	LIVE	25.08	143.75	-2.263E-02
187	0.45	LIVE	25.08	143.75	-2.263E-02

Table 30: Element Forces - Frames, Part 1 of 2

Frame	Station	OutputCase	P	V2	V3
	m		Kgf	Kgf	Kgf
187	0.9	LIVE	25.08	143.75	-2.263E-02
187	0.	SX	142.01	9.69	0.35
187	0.45	SX	142.01	9.69	0.35
187	0.9	SX	142.01	9.69	0.35
187	0.	SY	64.95	22.89	1.01
187	0.45	SY	64.95	22.89	1.01
187	0.9	SY	64.95	22.89	1.01
187	0.	WB	0.62	5.32	6.703E-04
187	0.45	WB	0.62	5.32	6.703E-04
187	0.9	WB	0.62	5.32	6.703E-04
188	0.	DEAD	27.36	735.11	0.2
188	0.35528	DEAD	27.36	750.11	0.2
188	0.71055	DEAD	27.36	765.11	0.2
188	0.	LIVE	27.31	1065.24	0.26
188	0.35528	LIVE	27.31	1065.24	0.26
188	0.71055	LIVE	27.31	1065.24	0.26
188	0.	SX	167.27	63.	2.37
188	0.35528	SX	167.27	63.	2.37
188	0.71055	SX	167.27	63.	2.37
188	0.	SY	85.14	22.55	3.52
188	0.35528	SY	85.14	22.55	3.52
188	0.71055	SY	85.14	22.55	3.52
188	0.	WB	0.72	42.13	7.428E-03
188	0.35528	WB	0.72	42.13	7.428E-03
188	0.71055	WB	0.72	42.13	7.428E-03
189	0.	DEAD	21.83	315.74	-6.371E-02
189	0.359	DEAD	21.83	330.9	-6.371E-02
189	0.718	DEAD	21.83	346.06	-6.371E-02
189	1.077	DEAD	21.83	361.22	-6.371E-02
189	0.	LIVE	19.18	500.76	-8.447E-02
189	0.359	LIVE	19.18	500.76	-8.447E-02
189	0.718	LIVE	19.18	500.76	-8.447E-02
189	1.077	LIVE	19.18	500.76	-8.447E-02
189	0.	SX	206.12	27.49	0.49
189	0.359	SX	206.12	27.49	0.49
189	0.718	SX	206.12	27.49	0.49
189	1.077	SX	206.12	27.49	0.49
189	0.	SY	141.26	26.94	0.32
189	0.359	SY	141.26	26.94	0.32
189	0.718	SY	141.26	26.94	0.32
189	1.077	SY	141.26	26.94	0.32
189	0.	WB	0.38	20.42	-2.628E-03
189	0.359	WB	0.38	20.42	-2.628E-03
189	0.718	WB	0.38	20.42	-2.628E-03
189	1.077	WB	0.38	20.42	-2.628E-03
190	0.	DEAD	22.19	-1319.24	3.025E-02
190	0.36438	DEAD	22.19	-1303.85	3.025E-02
190	0.72876	DEAD	22.19	-1288.46	3.025E-02
190	0.	LIVE	18.8	-1854.24	5.727E-02
190	0.36438	LIVE	18.8	-1854.24	5.727E-02
190	0.72876	LIVE	18.8	-1854.24	5.727E-02
190	0.	SX	253.67	130.22	2.14
190	0.36438	SX	253.67	130.22	2.14
190	0.72876	SX	253.67	130.22	2.14

Table 30: Element Forces - Frames, Part 1 of 2

Frame	Station	OutputCase	P	V2	V3
	m		Kgf	Kgf	Kgf
190	0.	SY	180.83	50.34	4.81
190	0.36438	SY	180.83	50.34	4.81
190	0.72876	SY	180.83	50.34	4.81
190	0.	WB	0.35	-74.81	1.339E-03
190	0.36438	WB	0.35	-74.81	1.339E-03
190	0.72876	WB	0.35	-74.81	1.339E-03
191	0.	DEAD	18.07	-560.1	-5.208E-02
191	0.4675	DEAD	18.07	-540.36	-5.208E-02
191	0.935	DEAD	18.07	-520.62	-5.208E-02
191	0.	LIVE	15.02	-823.99	-4.527E-02
191	0.4675	LIVE	15.02	-823.99	-4.527E-02
191	0.935	LIVE	15.02	-823.99	-4.527E-02
191	0.	SX	232.33	80.68	0.64
191	0.4675	SX	232.33	80.68	0.64
191	0.935	SX	232.33	80.68	0.64
191	0.	SY	172.41	27.82	1.37
191	0.4675	SY	172.41	27.82	1.37
191	0.935	SY	172.41	27.82	1.37
191	0.	WB	0.25	-33.46	-1.035E-03
191	0.4675	WB	0.25	-33.46	-1.035E-03
191	0.935	WB	0.25	-33.46	-1.035E-03
192	0.	DEAD	17.18	-47.91	7.035E-02
192	0.45	DEAD	17.18	-28.9	7.035E-02
192	0.9	DEAD	17.18	-9.9	7.035E-02
192	0.	LIVE	13.92	-65.45	6.178E-02
192	0.45	LIVE	13.92	-65.45	6.178E-02
192	0.9	LIVE	13.92	-65.45	6.178E-02
192	0.	SX	216.35	36.15	1.02
192	0.45	SX	216.35	36.15	1.02
192	0.9	SX	216.35	36.15	1.02
192	0.	SY	126.91	12.39	2.51
192	0.45	SY	126.91	12.39	2.51
192	0.9	SY	126.91	12.39	2.51
192	0.	WB	0.19	-3.14	-4.154E-04
192	0.45	WB	0.19	-3.14	-4.154E-04
192	0.9	WB	0.19	-3.14	-4.154E-04
193	0.	DEAD	19.35	458.42	-0.11
193	0.45	DEAD	19.35	477.42	-0.11
193	0.9	DEAD	19.35	496.42	-0.11
193	0.	LIVE	16.19	671.93	-0.1
193	0.45	LIVE	16.19	671.93	-0.1
193	0.9	LIVE	16.19	671.93	-0.1
193	0.	SX	227.25	40.83	0.5
193	0.45	SX	227.25	40.83	0.5
193	0.9	SX	227.25	40.83	0.5
193	0.	SY	103.64	17.93	1.15
193	0.45	SY	103.64	17.93	1.15
193	0.9	SY	103.64	17.93	1.15
193	0.	WB	0.23	26.24	-1.308E-03
193	0.45	WB	0.23	26.24	-1.308E-03
193	0.9	WB	0.23	26.24	-1.308E-03
194	0.	DEAD	18.83	1149.63	0.11
194	0.37027	DEAD	18.83	1165.26	0.11
194	0.74055	DEAD	18.83	1180.9	0.11

Table 30: Element Forces - Frames, Part 1 of 2

Frame	Station	OutputCase	P	V2	V3
	m		Kgf	Kgf	Kgf
194	1.11082	DEAD	18.83	1196.53	0.11
194	0.	LIVE	10.39	1697.97	0.11
194	0.37027	LIVE	10.39	1697.97	0.11
194	0.74055	LIVE	10.39	1697.97	0.11
194	1.11082	LIVE	10.39	1697.97	0.11
194	0.	SX	242.25	107.36	0.88
194	0.37027	SX	242.25	107.36	0.88
194	0.74055	SX	242.25	107.36	0.88
194	1.11082	SX	242.25	107.36	0.88
194	0.	SY	88.73	39.03	2.02
194	0.37027	SY	88.73	39.03	2.02
194	0.74055	SY	88.73	39.03	2.02
194	1.11082	SY	88.73	39.03	2.02
194	0.	WB	-0.39	67.35	1.758E-03
194	0.37027	WB	-0.39	67.35	1.758E-03
194	0.74055	WB	-0.39	67.35	1.758E-03
194	1.11082	WB	-0.39	67.35	1.758E-03
195	0.	DEAD	12.73	-16.83	0.79
195	0.37962	DEAD	12.73	-0.8	0.79
195	0.75923	DEAD	12.73	15.23	0.79
195	0.	LIVE	8.01	-15.29	0.56
195	0.37962	LIVE	8.01	-15.29	0.56
195	0.75923	LIVE	8.01	-15.29	0.56
195	0.	SX	152.48	2149.83	7.19
195	0.37962	SX	152.48	2149.83	7.19
195	0.75923	SX	152.48	2149.83	7.19
195	0.	SY	325.25	713.87	20.03
195	0.37962	SY	325.25	713.87	20.03
195	0.75923	SY	325.25	713.87	20.03
195	0.	WB	-0.23	-5.42	-1.583E-02
195	0.37962	WB	-0.23	-5.42	-1.583E-02
195	0.75923	WB	-0.23	-5.42	-1.583E-02
196	0.	DEAD	-72.13	-2069.67	31.56
196	0.28438	DEAD	-72.13	-1659.69	31.56
196	0.56876	DEAD	-72.13	-1249.71	31.56
196	0.56876	DEAD	-36.29	-1189.44	-1.17
196	0.83194	DEAD	-36.29	-810.02	-1.17
196	1.09512	DEAD	-36.29	-430.61	-1.17
196	1.09512	DEAD	-36.24	-238.62	1.52
196	1.46026	DEAD	-36.24	287.79	1.52
196	1.8254	DEAD	-36.24	814.2	1.52
196	2.19054	DEAD	-36.24	1340.61	1.52
196	0.	LIVE	-53.99	-157.72	18.97
196	0.28438	LIVE	-53.99	-157.72	18.97
196	0.56876	LIVE	-53.99	-157.72	18.97
196	0.56876	LIVE	-16.72	-49.51	0.58
196	0.83194	LIVE	-16.72	-49.51	0.58
196	1.09512	LIVE	-16.72	-49.51	0.58
196	1.09512	LIVE	-16.65	86.98	2.42
196	1.46026	LIVE	-16.65	86.98	2.42
196	1.8254	LIVE	-16.65	86.98	2.42
196	2.19054	LIVE	-16.65	86.98	2.42
196	0.	SX	1331.16	2997.95	1840.66
196	0.28438	SX	1331.16	2997.95	1840.66

Table 30: Element Forces - Frames, Part 1 of 2

Frame	Station	OutputCase	P	V2	V3
	m		Kgf	Kgf	Kgf
196	0.56876	SX	1331.16	2997.95	1840.66
196	0.56876	SX	652.58	2997.95	122.96
196	0.83194	SX	652.58	2997.95	122.96
196	1.09512	SX	652.58	2997.95	122.96
196	1.09512	SX	610.64	3151.14	159.44
196	1.46026	SX	610.64	3151.14	159.44
196	1.8254	SX	610.64	3151.14	159.44
196	2.19054	SX	610.64	3151.14	159.44
196	0.	SY	2585.19	4162.92	1665.06
196	0.28438	SY	2585.19	4162.92	1665.06
196	0.56876	SY	2585.19	4162.92	1665.06
196	0.56876	SY	1479.86	4162.97	655.5
196	0.83194	SY	1479.86	4162.97	655.5
196	1.09512	SY	1479.86	4162.97	655.5
196	1.09512	SY	1418.12	4189.23	612.52
196	1.46026	SY	1418.12	4189.23	612.52
196	1.8254	SY	1418.12	4189.23	612.52
196	2.19054	SY	1418.12	4189.23	612.52
196	0.	WB	0.63	-1.69	0.39
196	0.28438	WB	0.63	-1.69	0.39
196	0.56876	WB	0.63	-1.69	0.39
196	0.56876	WB	0.81	2.64	2.246E-03
196	0.83194	WB	0.81	2.64	2.246E-03
196	1.09512	WB	0.81	2.64	2.246E-03
196	1.09512	WB	0.82	3.07	3.432E-03
196	1.46026	WB	0.82	3.07	3.432E-03
196	1.8254	WB	0.82	3.07	3.432E-03
196	2.19054	WB	0.82	3.07	3.432E-03
197	0.	DEAD	15.87	2362.6	-48.06
197	0.44808	DEAD	15.87	3008.57	-48.06
197	0.	LIVE	28.54	1045.92	-32.85
197	0.44808	LIVE	28.54	1045.92	-32.85
197	0.	SX	306.04	2238.58	864.61
197	0.44808	SX	306.04	2238.58	864.61
197	0.	SY	502.37	4065.84	1019.2
197	0.44808	SY	502.37	4065.84	1019.2
197	0.	WB	0.58	8.45	8.402E-02
197	0.44808	WB	0.58	8.45	8.402E-02
208	0.	DEAD	-3430.84	-155.95	131.23
208	2.2	DEAD	-3083.26	-155.95	131.23
208	4.4	DEAD	-2735.67	-155.95	131.23
208	0.	LIVE	-1671.62	-130.48	93.21
208	2.2	LIVE	-1671.62	-130.48	93.21
208	4.4	LIVE	-1671.62	-130.48	93.21
208	0.	SX	658.38	281.35	100.1
208	2.2	SX	658.38	281.35	100.1
208	4.4	SX	658.38	281.35	100.1
208	0.	SY	558.37	158.4	462.
208	2.2	SY	558.37	158.4	462.
208	4.4	SY	558.37	158.4	462.
208	0.	WB	0.39	-0.24	-0.68
208	2.2	WB	0.39	-0.24	-0.68
208	4.4	WB	0.39	-0.24	-0.68
209	0.	DEAD	-3633.94	-199.52	-157.44

Table 30: Element Forces - Frames, Part 2 of 2

Table 30: Element Forces - Frames, Part 2 of 2

Frame	Station	OutputCase	T	M2	M3
	m		Kgf-m	Kgf-m	Kgf-m
1	0.	DEAD	0.	1.819E-14	0.
1	2.35	DEAD	0.	-86.42	95.39
1	4.7	DEAD	0.	-172.85	190.79
1	0.	LIVE	0.	0.	-1.819E-14
1	2.35	LIVE	0.	-65.32	84.59
1	4.7	LIVE	0.	-130.64	169.17
1	0.	SX	0.	8.279E-13	2.787E-12
1	2.35	SX	0.	239.91	933.75
1	4.7	SX	0.	479.82	1867.5
1	0.	SY	0.	4.066E-12	4.122E-12
1	2.35	SY	0.	1320.65	803.58
1	4.7	SY	0.	2641.31	1607.16
1	0.	WB	0.	-1.421E-16	0.
1	2.35	WB	0.	3.215E-02	0.71
1	4.7	WB	0.	6.431E-02	1.43
2	0.	DEAD	0.	-1.819E-14	1.819E-14
2	2.35	DEAD	0.	83.57	111.11
2	4.7	DEAD	0.	167.15	222.22
2	0.	LIVE	0.	-1.819E-14	0.
2	2.35	LIVE	0.	63.93	100.3
2	4.7	LIVE	0.	127.86	200.59
2	0.	SX	0.	1.106E-13	1.293E-12
2	2.35	SX	0.	238.02	929.25
2	4.7	SX	0.	476.04	1858.51
2	0.	SY	0.	1.019E-13	1.250E-12
2	2.35	SY	0.	1315.13	294.78
2	4.7	SY	0.	2630.25	589.56
2	0.	WB	0.	-1.421E-16	0.
2	2.35	WB	0.	-2.033E-02	0.37
2	4.7	WB	0.	-4.065E-02	0.74
3	0.	DEAD	0.	1.819E-14	3.638E-14
3	2.35	DEAD	0.	-110.52	191.19
3	4.7	DEAD	0.	-221.04	382.38
3	0.	LIVE	0.	0.	0.
3	2.35	LIVE	0.	-82.31	170.81
3	4.7	LIVE	0.	-164.63	341.63
3	0.	SX	0.	9.925E-13	3.082E-13
3	2.35	SX	0.	233.44	849.49
3	4.7	SX	0.	466.89	1698.98
3	0.	SY	0.	5.681E-12	1.034E-12
3	2.35	SY	0.	1288.7	317.49
3	4.7	SY	0.	2577.4	634.98
3	0.	WB	0.	0.	5.684E-16
3	2.35	WB	0.	0.33	0.12
3	4.7	WB	0.	0.67	0.24
4	0.	DEAD	0.	-1.819E-14	3.638E-14
4	2.35	DEAD	0.	109.38	188.4
4	4.7	DEAD	0.	218.75	376.8
4	0.	LIVE	0.	0.	0.
4	2.35	LIVE	0.	85.69	163.23
4	4.7	LIVE	0.	171.37	326.45
4	0.	SX	0.	4.191E-13	8.396E-13
4	2.35	SX	0.	234.06	920.22

Table 30: Element Forces - Frames, Part 2 of 2

Frame	Station	OutputCase	T	M2	M3
	m		Kgf-m	Kgf-m	Kgf-m
4	4.7	SX	0.	468.12	1840.43
4	0.	SY	0.	2.437E-12	4.878E-12
4	2.35	SY	0.	1300.93	1124.21
4	4.7	SY	0.	2601.87	2248.41
4	0.	WB	0.	-1.421E-16	0.
4	2.35	WB	0.	8.049E-02	0.39
4	4.7	WB	0.	0.16	0.78
5	0.	DEAD	0.	-3.638E-14	-3.638E-14
5	2.35	DEAD	0.	226.07	-100.27
5	4.7	DEAD	0.	452.13	-200.55
5	0.	LIVE	0.	-3.638E-14	0.
5	2.35	LIVE	0.	184.9	-77.99
5	4.7	LIVE	0.	369.8	-155.97
5	0.	SX	0.	5.235E-14	1.989E-12
5	2.35	SX	0.	166.39	1226.83
5	4.7	SX	0.	332.78	2453.66
5	0.	SY	0.	6.399E-14	3.324E-12
5	2.35	SY	0.	944.22	1418.73
5	4.7	SY	0.	1888.44	2837.46
5	0.	WB	0.	-1.421E-16	-5.684E-16
5	2.35	WB	0.	4.895E-02	0.5
5	4.7	WB	0.	9.790E-02	1.01
6	0.	DEAD	0.	0.	0.
6	2.35	DEAD	0.	-151.06	-16.02
6	4.7	DEAD	0.	-302.13	-32.04
6	0.	LIVE	0.	0.	0.
6	2.35	LIVE	0.	-108.9	19.5
6	4.7	LIVE	0.	-217.8	39.01
6	0.	SX	0.	2.550E-13	1.545E-12
6	2.35	SX	0.	211.42	1166.81
6	4.7	SX	0.	422.83	2333.63
6	0.	SY	0.	8.319E-13	1.721E-12
6	2.35	SY	0.	1197.4	563.19
6	4.7	SY	0.	2394.8	1126.37
6	0.	WB	0.	-2.842E-16	1.137E-15
6	2.35	WB	0.	1.35	3.89
6	4.7	WB	0.	2.69	7.78
7	0.	DEAD	0.	4.547E-15	0.
7	2.35	DEAD	0.	-21.16	-109.72
7	4.7	DEAD	0.	-42.31	-219.45
7	0.	LIVE	0.	-2.274E-15	1.819E-14
7	2.35	LIVE	0.	-18.31	-85.75
7	4.7	LIVE	0.	-36.62	-171.51
7	0.	SX	0.	4.337E-13	7.759E-13
7	2.35	SX	0.	212.39	931.8
7	4.7	SX	0.	424.78	1863.61
7	0.	SY	0.	2.435E-12	6.896E-13
7	2.35	SY	0.	1237.48	294.46
7	4.7	SY	0.	2474.97	588.91
7	0.	WB	0.	-1.421E-16	5.684E-16
7	2.35	WB	0.	0.38	0.81
7	4.7	WB	0.	0.77	1.61
8	0.	DEAD	0.	0.	0.
8	2.35	DEAD	0.	-11.3	96.

Table 30: Element Forces - Frames, Part 2 of 2

Frame	Station	OutputCase	T	M2	M3
	m		Kgf-m	Kgf-m	Kgf-m
8	4.7	DEAD	0.	-22.59	192.
8	0.	LIVE	0.	0.	3.638E-14
8	2.35	LIVE	0.	-21.49	128.94
8	4.7	LIVE	0.	-42.98	257.89
8	0.	SX	0.	2.894E-13	1.828E-12
8	2.35	SX	0.	177.61	964.35
8	4.7	SX	0.	355.22	1928.7
8	0.	SY	0.	1.632E-12	1.092E-12
8	2.35	SY	0.	1011.93	384.51
8	4.7	SY	0.	2023.85	769.03
8	0.	WB	0.	0.	0.
8	2.35	WB	0.	-1.33	5.77
8	4.7	WB	0.	-2.66	11.54
9	0.	DEAD	0.	0.	-1.819E-14
9	2.35	DEAD	0.	-77.3	-92.77
9	4.7	DEAD	0.	-154.6	-185.54
9	0.	LIVE	0.	9.095E-15	-9.095E-15
9	2.35	LIVE	0.	-63.95	-70.22
9	4.7	LIVE	0.	-127.89	-140.43
9	0.	SX	0.	4.223E-13	2.059E-12
9	2.35	SX	0.	177.68	932.1
9	4.7	SX	0.	355.36	1864.21
9	0.	SY	0.	2.438E-12	4.322E-12
9	2.35	SY	0.	1007.16	783.8
9	4.7	SY	0.	2014.32	1567.61
9	0.	WB	0.	-7.105E-17	-5.684E-16
9	2.35	WB	0.	-0.48	0.66
9	4.7	WB	0.	-0.96	1.31
10	0.	DEAD	0.	0.	-9.095E-15
10	2.35	DEAD	0.	-5.01	-50.53
10	4.7	DEAD	0.	-10.01	-101.06
10	0.	LIVE	0.	1.137E-15	4.547E-15
10	2.35	LIVE	0.	-5.91	-51.34
10	4.7	LIVE	0.	-11.81	-102.68
10	0.	SX	0.	3.192E-13	8.265E-13
10	2.35	SX	0.	63.63	1339.71
10	4.7	SX	0.	127.26	2679.42
10	0.	SY	0.	1.217E-12	1.377E-12
10	2.35	SY	0.	342.94	534.82
10	4.7	SY	0.	685.88	1069.65
10	0.	WB	0.	-6.217E-17	-2.842E-16
10	2.35	WB	0.	-0.26	-1.42
10	4.7	WB	0.	-0.52	-2.85
11	0.	DEAD	0.	2.274E-15	-4.547E-15
11	2.35	DEAD	0.	-6.88	-11.08
11	4.7	DEAD	0.	-13.76	-22.15
11	0.	LIVE	0.	0.	2.558E-15
11	2.35	LIVE	0.	-8.51	-15.18
11	4.7	LIVE	0.	-17.02	-30.36
11	0.	SX	0.	3.127E-13	3.080E-12
11	2.35	SX	0.	56.87	1323.68
11	4.7	SX	0.	113.74	2647.36
11	0.	SY	0.	1.224E-12	1.298E-12
11	2.35	SY	0.	252.35	525.17

Table 30: Element Forces - Frames, Part 2 of 2

Frame	Station	OutputCase	T	M2	M3
	m		Kgf-m	Kgf-m	Kgf-m
11	4.7	SY	0.	504.7	1050.33
11	0.	WB	0.	-3.553E-17	-5.684E-16
11	2.35	WB	0.	-0.36	8.115E-02
11	4.7	WB	0.	-0.73	0.16
12	0.	DEAD	0.	3.638E-14	-1.819E-14
12	2.35	DEAD	0.	-179.36	-71.14
12	4.7	DEAD	0.	-358.72	-142.28
12	0.	LIVE	0.	0.	-1.819E-14
12	2.35	LIVE	0.	-148.39	-99.26
12	4.7	LIVE	0.	-296.78	-198.53
12	0.	SX	0.	1.735E-13	1.544E-12
12	2.35	SX	0.	135.26	1215.4
12	4.7	SX	0.	270.52	2430.8
12	0.	SY	0.	8.197E-13	1.450E-12
12	2.35	SY	0.	493.52	497.07
12	4.7	SY	0.	987.04	994.14
12	0.	WB	0.	6.217E-17	-2.842E-16
12	2.35	WB	0.	-0.17	-3.79
12	4.7	WB	0.	-0.34	-7.57
13	0.	DEAD	0.	3.638E-14	0.
13	2.35	DEAD	0.	-187.19	-52.96
13	4.7	DEAD	0.	-374.38	-105.93
13	0.	LIVE	0.	0.	-9.095E-15
13	2.35	LIVE	0.	-156.08	-43.56
13	4.7	LIVE	0.	-312.15	-87.12
13	0.	SX	0.	4.209E-13	9.538E-13
13	2.35	SX	0.	136.34	1214.65
13	4.7	SX	0.	272.68	2429.31
13	0.	SY	0.	8.180E-13	1.284E-12
13	2.35	SY	0.	693.41	493.11
13	4.7	SY	0.	1386.83	986.21
13	0.	WB	0.	2.665E-17	0.
13	2.35	WB	0.	-0.37	-7.863E-02
13	4.7	WB	0.	-0.73	-0.16
14	0.	DEAD	0.	-3.638E-14	0.
14	2.35	DEAD	0.	186.2	-42.84
14	4.7	DEAD	0.	372.41	-85.67
14	0.	LIVE	0.	-3.638E-14	0.
14	2.35	LIVE	0.	157.93	-28.18
14	4.7	LIVE	0.	315.87	-56.36
14	0.	SX	0.	3.402E-13	1.920E-12
14	2.35	SX	0.	138.23	1293.04
14	4.7	SX	0.	276.46	2586.08
14	0.	SY	0.	1.636E-12	9.107E-13
14	2.35	SY	0.	689.92	1480.31
14	4.7	SY	0.	1379.85	2960.62
14	0.	WB	0.	-1.421E-16	-5.684E-16
14	2.35	WB	0.	0.46	0.59
14	4.7	WB	0.	0.93	1.17
15	0.	DEAD	0.	0.	0.
15	2.35	DEAD	0.	179.34	10.77
15	4.7	DEAD	0.	358.67	21.54
15	0.	LIVE	0.	0.	-1.137E-15
15	2.35	LIVE	0.	152.22	16.73

Table 30: Element Forces - Frames, Part 2 of 2

Frame	Station	OutputCase	T	M2	M3
	m		Kgf-m	Kgf-m	Kgf-m
15	4.7	LIVE	0.	304.44	33.46
15	0.	SX	0.	3.031E-13	4.533E-12
15	2.35	SX	0.	133.32	1301.53
15	4.7	SX	0.	266.64	2603.06
15	0.	SY	0.	8.835E-13	4.237E-12
15	2.35	SY	0.	496.23	1490.91
15	4.7	SY	0.	992.46	2981.83
15	0.	WB	0.	-1.421E-16	0.
15	2.35	WB	0.	0.34	0.63
15	4.7	WB	0.	0.68	1.25
16	0.	DEAD	0.	-7.276E-14	1.819E-14
16	2.35	DEAD	0.	233.83	98.87
16	4.7	DEAD	0.	467.66	197.75
16	0.	LIVE	0.	-3.638E-14	0.
16	2.35	LIVE	0.	195.24	91.09
16	4.7	LIVE	0.	390.48	182.18
16	0.	SX	0.	3.461E-14	5.957E-13
16	2.35	SX	0.	148.29	1239.37
16	4.7	SX	0.	296.59	2478.73
16	0.	SY	0.	2.074E-13	3.264E-12
16	2.35	SY	0.	306.02	1417.84
16	4.7	SY	0.	612.05	2835.68
16	0.	WB	0.	0.	0.
16	2.35	WB	0.	-0.25	0.6
16	4.7	WB	0.	-0.5	1.2
17	0.	DEAD	0.	0.	-3.638E-14
17	2.35	DEAD	0.	99.89	-215.2
17	4.7	DEAD	0.	199.78	-430.39
17	0.	LIVE	0.	0.	0.
17	2.35	LIVE	0.	78.29	-175.02
17	4.7	LIVE	0.	156.58	-350.04
17	0.	SX	0.	5.923E-13	8.647E-13
17	2.35	SX	0.	224.63	928.96
17	4.7	SX	0.	449.25	1857.92
17	0.	SY	0.	9.300E-13	1.763E-12
17	2.35	SY	0.	374.69	1098.76
17	4.7	SY	0.	749.37	2197.53
17	0.	WB	0.	0.	-5.684E-16
17	2.35	WB	0.	-0.15	0.61
17	4.7	WB	0.	-0.29	1.23
18	0.	DEAD	0.	1.819E-14	-7.276E-14
18	2.35	DEAD	0.	-70.89	-416.08
18	4.7	DEAD	0.	-141.78	-832.16
18	0.	LIVE	0.	0.	0.
18	2.35	LIVE	0.	-57.94	-357.79
18	4.7	LIVE	0.	-115.88	-715.58
18	0.	SX	0.	1.126E-12	3.297E-12
18	2.35	SX	0.	304.58	902.53
18	4.7	SX	0.	609.17	1805.06
18	0.	SY	0.	6.521E-13	1.328E-12
18	2.35	SY	0.	511.17	371.11
18	4.7	SY	0.	1022.34	742.22
18	0.	WB	0.	1.776E-17	5.684E-16
18	2.35	WB	0.	-3.402E-02	0.41

Table 30: Element Forces - Frames, Part 2 of 2

Frame	Station	OutputCase	T	M2	M3
	m		Kgf-m	Kgf-m	Kgf-m
18	4.7	WB	0.	-6.803E-02	0.83
19	0.	DEAD	0.	4.547E-15	0.
19	2.35	DEAD	0.	-6.61	-199.11
19	4.7	DEAD	0.	-13.23	-398.22
19	0.	LIVE	0.	2.274E-15	-3.638E-14
19	2.35	LIVE	0.	-3.3	-155.11
19	4.7	LIVE	0.	-6.6	-310.21
19	0.	SX	0.	1.197E-12	1.404E-12
19	2.35	SX	0.	321.02	977.36
19	4.7	SX	0.	642.05	1954.73
19	0.	SY	0.	9.594E-13	1.805E-12
19	2.35	SY	0.	539.14	458.72
19	4.7	SY	0.	1078.27	917.45
19	0.	WB	0.	0.	-5.684E-16
19	2.35	WB	0.	-7.076E-02	0.92
19	4.7	WB	0.	-0.14	1.83
20	0.	DEAD	0.	0.	0.
20	2.35	DEAD	0.	-19.67	-141.3
20	4.7	DEAD	0.	-39.34	-282.6
20	0.	LIVE	0.	4.547E-15	0.
20	2.35	LIVE	0.	-11.31	-107.04
20	4.7	LIVE	0.	-22.62	-214.08
20	0.	SX	0.	4.084E-13	1.375E-12
20	2.35	SX	0.	251.66	876.93
20	4.7	SX	0.	503.33	1753.86
20	0.	SY	0.	6.148E-13	7.403E-13
20	2.35	SY	0.	433.93	814.58
20	4.7	SY	0.	867.86	1629.16
20	0.	WB	0.	1.776E-17	0.
20	2.35	WB	0.	-3.602E-02	0.79
20	4.7	WB	0.	-7.203E-02	1.58
21	0.	DEAD	0.	3.638E-14	3.638E-14
21	2.35	DEAD	0.	-147.24	238.72
21	4.7	DEAD	0.	-294.48	477.44
21	0.	LIVE	0.	1.819E-14	0.
21	2.35	LIVE	0.	-93.16	227.19
21	4.7	LIVE	0.	-186.32	454.39
21	0.	SX	0.	3.905E-13	1.767E-12
21	2.35	SX	0.	272.99	1133.15
21	4.7	SX	0.	545.97	2266.3
21	0.	SY	0.	5.403E-13	9.800E-13
21	2.35	SY	0.	430.1	466.74
21	4.7	SY	0.	860.19	933.48
21	0.	WB	0.	-5.684E-16	-5.684E-16
21	2.35	WB	0.	3.03	1.59
21	4.7	WB	0.	6.07	3.18
22	0.	DEAD	0.	9.095E-15	-1.819E-14
22	2.35	DEAD	0.	-39.63	-63.93
22	4.7	DEAD	0.	-79.26	-127.86
22	0.	LIVE	0.	1.819E-14	-9.095E-15
22	2.35	LIVE	0.	-62.07	-60.93
22	4.7	LIVE	0.	-124.14	-121.86
22	0.	SX	0.	1.296E-13	3.099E-12
22	2.35	SX	0.	159.11	937.75

Table 30: Element Forces - Frames, Part 2 of 2

Frame	Station	OutputCase	T	M2	M3
	m		Kgf-m	Kgf-m	Kgf-m
22	4.7	SX	0.	318.22	1875.5
22	0.	SY	0.	1.630E-13	2.734E-12
22	2.35	SY	0.	311.05	384.64
22	4.7	SY	0.	622.1	769.28
22	0.	WB	0.	0.	1.421E-16
22	2.35	WB	0.	-3.2	-1.84
22	4.7	WB	0.	-6.4	-3.67
23	0.	DEAD	5.55	-13.07	-81.05
23	2.35	DEAD	5.55	52.4	59.73
23	4.7	DEAD	5.55	117.87	200.51
23	0.	LIVE	4.63	2.84	-13.7
23	2.35	LIVE	4.63	19.15	-2.39
23	4.7	LIVE	4.63	35.46	8.92
23	0.	SX	249.42	3837.2	6069.47
23	2.35	SX	249.42	43.15	1230.44
23	4.7	SX	249.42	3750.94	3620.47
23	0.	SY	944.02	6627.75	2254.91
23	2.35	SY	944.02	75.16	398.84
23	4.7	SY	944.02	6477.45	1815.15
23	0.	WB	0.11	-0.53	4.81
23	2.35	WB	0.11	-1.333E-02	-4.94
23	4.7	WB	0.11	0.5	-14.69
24	0.	DEAD	4.91	42.39	-177.57
24	2.35	DEAD	4.91	23.66	99.07
24	4.7	DEAD	4.91	4.93	375.71
24	0.	LIVE	4.28	22.89	-144.84
24	2.35	LIVE	4.28	8.75	56.47
24	4.7	LIVE	4.28	-5.38	257.77
24	0.	SX	261.	3847.77	6226.43
24	2.35	SX	261.	43.79	1093.91
24	4.7	SX	261.	3775.24	4040.31
24	0.	SY	931.03	6671.36	2913.27
24	2.35	SY	931.03	51.33	449.54
24	4.7	SY	931.03	6570.71	2026.21
24	0.	WB	0.1	-0.27	7.791E-02
24	2.35	WB	0.1	-0.14	-2.7
24	4.7	WB	0.1	-1.104E-02	-5.49
25	0.	DEAD	2.4	41.66	-90.78
25	2.35	DEAD	2.4	-3.11	44.31
25	4.7	DEAD	2.4	-47.88	179.41
25	0.	LIVE	2.08	14.21	-82.23
25	2.35	LIVE	2.08	0.77	30.14
25	4.7	LIVE	2.08	-12.66	142.51
25	0.	SX	105.61	1554.51	2669.9
25	2.35	SX	105.61	29.8	401.19
25	4.7	SX	105.61	1517.05	1877.92
25	0.	SY	386.77	2760.85	2575.69
25	2.35	SY	386.77	27.01	217.76
25	4.7	SY	386.77	2712.57	2162.1
25	0.	WB	4.695E-02	-9.753E-02	-0.93
25	2.35	WB	4.695E-02	-7.400E-02	-0.71
25	4.7	WB	4.695E-02	-5.047E-02	-0.49
37	0.	DEAD	0.4	-2.313E-03	-1028.4
37	0.4167	DEAD	0.4	-7.135E-02	-679.84

Table 30: Element Forces - Frames, Part 2 of 2

Frame	Station	OutputCase	T	M2	M3
	m		Kgf-m	Kgf-m	Kgf-m
37	0.8334	DEAD	0.4	-0.14	-341.19
37	1.2501	DEAD	0.4	-0.21	-12.45
37	0.	LIVE	0.33	2.162E-02	-890.4
37	0.4167	LIVE	0.33	-2.674E-02	-596.79
37	0.8334	LIVE	0.33	-7.510E-02	-303.18
37	1.2501	LIVE	0.33	-0.12	-9.57
37	0.	SX	1.41	0.56	335.2
37	0.4167	SX	1.41	0.28	222.78
37	0.8334	SX	1.41	4.877E-02	110.4
37	1.2501	SX	1.41	0.29	5.02
37	0.	SY	0.54	1.12	1647.83
37	0.4167	SY	0.54	0.65	1100.06
37	0.8334	SY	0.54	0.2	552.29
37	1.2501	SY	0.54	0.31	4.87
37	0.	WB	-1.796E-03	2.779E-03	-2.59
37	0.4167	WB	-1.796E-03	3.485E-03	-1.72
37	0.8334	WB	-1.796E-03	4.192E-03	-0.85
37	1.2501	WB	-1.796E-03	4.898E-03	2.459E-02
38	0.	DEAD	0.	-5.554E-02	1.455E-13
38	0.44003	DEAD	0.	-2.419E-02	-44.4
38	0.88005	DEAD	0.	7.146E-03	-94.74
38	0.	LIVE	0.	-4.214E-02	0.
38	0.44003	LIVE	0.	-2.274E-02	-74.38
38	0.88005	LIVE	0.	-3.339E-03	-148.76
38	0.	SX	0.	0.3	4.979E-14
38	0.44003	SX	0.	3.965E-02	1.973E-02
38	0.88005	SX	0.	0.32	3.946E-02
38	0.	SY	0.	0.73	3.660E-14
38	0.44003	SY	0.	5.529E-02	1.173E-02
38	0.88005	SY	0.	0.64	2.346E-02
38	0.	WB	0.	3.314E-04	-1.819E-14
38	0.44003	WB	0.	-3.873E-04	-2.98
38	0.88005	WB	0.	-1.106E-03	-5.95
40	0.	DEAD	5.014E-03	-3.049E-02	-1.35
40	0.4675	DEAD	5.014E-03	-3.337E-02	178.63
40	0.935	DEAD	5.014E-03	-3.625E-02	351.9
40	0.	LIVE	2.188E-03	-3.351E-02	-1.26
40	0.4675	LIVE	2.188E-03	-4.446E-02	155.85
40	0.935	LIVE	2.188E-03	-5.541E-02	312.97
40	0.	SX	5.696E-02	0.26	0.39
40	0.4675	SX	5.696E-02	0.23	6.55
40	0.935	SX	5.696E-02	0.21	13.48
40	0.	SY	0.29	0.31	0.3
40	0.4675	SY	0.29	0.3	4.39
40	0.935	SY	0.29	0.3	8.67
40	0.	WB	-2.702E-05	-1.267E-03	-1.982E-04
40	0.4675	WB	-2.702E-05	-2.073E-03	1.714E-02
40	0.935	WB	-2.702E-05	-2.878E-03	3.449E-02
41	0.	DEAD	5.255E-03	3.724E-02	351.56
41	0.45	DEAD	5.255E-03	3.902E-02	397.95
41	0.9	DEAD	5.255E-03	4.080E-02	438.12
41	0.	LIVE	3.037E-03	5.886E-02	312.65
41	0.45	LIVE	3.037E-03	5.298E-02	347.77
41	0.9	LIVE	3.037E-03	4.710E-02	382.89

Table 30: Element Forces - Frames, Part 2 of 2

Frame	Station	OutputCase	T	M2	M3
	m		Kgf-m	Kgf-m	Kgf-m
41	0.	SX	2.855E-02	0.16	13.43
41	0.45	SX	2.855E-02	0.21	6.
41	0.9	SX	2.855E-02	0.26	4.54
41	0.	SY	0.15	0.29	8.7
41	0.45	SY	0.15	0.29	14.66
41	0.9	SY	0.15	0.3	22.27
41	0.	WB	-2.564E-05	3.226E-03	3.449E-02
41	0.45	WB	-2.564E-05	2.495E-03	2.622E-02
41	0.9	WB	-2.564E-05	1.764E-03	1.794E-02
42	0.	DEAD	4.643E-03	-4.739E-02	438.11
42	0.45	DEAD	4.643E-03	-4.584E-02	409.45
42	0.9	DEAD	4.643E-03	-4.429E-02	374.57
42	0.	LIVE	3.633E-03	-5.535E-02	382.88
42	0.45	LIVE	3.633E-03	-5.428E-02	354.73
42	0.9	LIVE	3.633E-03	-5.322E-02	326.58
42	0.	SX	3.097E-03	0.27	4.5
42	0.45	SX	3.097E-03	0.15	8.16
42	0.9	SX	3.097E-03	4.372E-02	12.62
42	0.	SY	1.403E-02	0.28	22.26
42	0.45	SY	1.403E-02	0.2	22.75
42	0.9	SY	1.403E-02	0.12	23.4
42	0.	WB	-5.407E-06	-2.019E-03	1.806E-02
42	0.45	WB	-5.407E-06	-1.925E-03	-1.500E-02
42	0.9	WB	-5.407E-06	-1.831E-03	-4.805E-02
43	0.	DEAD	3.888E-03	5.249E-02	374.62
43	0.45	DEAD	3.888E-03	6.015E-02	274.45
43	0.9	DEAD	3.888E-03	6.782E-02	168.06
43	0.	LIVE	4.303E-03	5.468E-02	326.63
43	0.45	LIVE	4.303E-03	5.675E-02	237.59
43	0.9	LIVE	4.303E-03	5.883E-02	148.56
43	0.	SX	1.612E-02	3.989E-02	12.52
43	0.45	SX	1.612E-02	0.11	15.28
43	0.9	SX	1.612E-02	0.2	18.32
43	0.	SY	8.037E-02	0.18	23.37
43	0.45	SY	8.037E-02	0.15	15.07
43	0.9	SY	8.037E-02	0.14	8.79
43	0.	WB	3.056E-05	1.322E-03	-4.791E-02
43	0.45	WB	3.056E-05	9.708E-04	-0.1
43	0.9	WB	3.056E-05	6.199E-04	-0.16
44	0.	DEAD	1.989E-03	-6.598E-02	168.31
44	0.45	DEAD	1.989E-03	-8.206E-02	-21.41
44	0.9	DEAD	1.989E-03	-9.814E-02	-217.35
44	0.	LIVE	1.847E-03	-5.821E-02	148.79
44	0.45	LIVE	1.847E-03	-7.130E-02	-21.31
44	0.9	LIVE	1.847E-03	-8.439E-02	-191.4
44	0.	SX	2.234E-02	0.18	18.29
44	0.45	SX	2.234E-02	7.690E-02	16.19
44	0.9	SX	2.234E-02	3.584E-02	14.55
44	0.	SY	0.1	8.989E-02	8.77
44	0.45	SY	0.1	7.163E-02	11.95
44	0.9	SY	0.1	0.1	25.33
44	0.	WB	-8.154E-05	-6.317E-04	-0.16
44	0.45	WB	-8.154E-05	-5.483E-04	-0.16
44	0.9	WB	-8.154E-05	-4.649E-04	-0.17

Table 30: Element Forces - Frames, Part 2 of 2

Frame	Station	OutputCase	T	M2	M3
	m		Kgf-m	Kgf-m	Kgf-m
45	0.	DEAD	-1.233E-02	0.12	-217.2
45	0.465	DEAD	-1.233E-02	7.718E-02	-450.05
45	0.	LIVE	-1.398E-02	9.279E-02	-191.26
45	0.465	LIVE	-1.398E-02	6.762E-02	-404.21
45	0.	SX	4.915E-03	0.22	14.62
45	0.465	SX	4.915E-03	0.31	11.29
45	0.	SY	3.960E-03	0.71	25.32
45	0.465	SY	3.960E-03	0.29	44.22
45	0.	WB	-4.615E-04	-5.724E-04	-0.17
45	0.465	WB	-4.615E-04	8.789E-04	-3.932E-02
46	0.	DEAD	-1.830E-02	-2.135E-02	-449.71
46	0.435	DEAD	-1.830E-02	1.279E-02	-262.18
46	0.	LIVE	-2.220E-02	-1.843E-02	-403.92
46	0.435	LIVE	-2.220E-02	2.080E-02	-229.32
46	0.	SX	7.390E-03	0.27	11.08
46	0.435	SX	7.390E-03	0.33	26.37
46	0.	SY	4.307E-02	0.15	44.12
46	0.435	SY	4.307E-02	0.73	51.94
46	0.	WB	-7.384E-04	-4.264E-04	-3.795E-02
46	0.435	WB	-7.384E-04	1.306E-03	-6.094E-04
47	0.	DEAD	-2.164E-02	-3.412E-02	-262.04
47	0.45	DEAD	-2.164E-02	-9.785E-03	-98.51
47	0.9	DEAD	-2.164E-02	1.455E-02	58.8
47	0.	LIVE	-2.504E-02	-3.357E-02	-229.2
47	0.45	LIVE	-2.504E-02	-9.634E-03	-86.88
47	0.9	LIVE	-2.504E-02	1.430E-02	55.45
47	0.	SX	2.245E-02	0.25	26.32
47	0.45	SX	2.245E-02	7.695E-02	21.69
47	0.9	SX	2.245E-02	0.18	17.12
47	0.	SY	0.12	0.66	51.91
47	0.45	SY	0.12	0.22	38.01
47	0.9	SY	0.12	0.25	24.16
47	0.	WB	-7.136E-04	-8.205E-04	2.355E-04
47	0.45	WB	-7.136E-04	-1.959E-04	-1.418E-02
47	0.9	WB	-7.136E-04	4.286E-04	-2.860E-02
48	0.	DEAD	-6.296E-03	-6.384E-03	58.8
48	0.45	DEAD	-6.296E-03	3.048E-03	108.1
48	0.9	DEAD	-6.296E-03	1.248E-02	151.18
48	0.	LIVE	-6.757E-03	-6.239E-03	55.44
48	0.45	LIVE	-6.757E-03	4.513E-03	95.25
48	0.9	LIVE	-6.757E-03	1.526E-02	135.05
48	0.	SX	4.066E-03	0.17	17.16
48	0.45	SX	4.066E-03	3.822E-02	4.23
48	0.9	SX	4.066E-03	0.18	8.75
48	0.	SY	1.720E-02	0.31	24.2
48	0.45	SY	1.720E-02	8.283E-02	7.51
48	0.9	SY	1.720E-02	0.44	9.32
48	0.	WB	-1.408E-04	-2.636E-04	-2.802E-02
48	0.45	WB	-1.408E-04	2.196E-04	-2.707E-02
48	0.9	WB	-1.408E-04	7.028E-04	-2.613E-02
49	0.	DEAD	6.427E-03	1.005E-03	151.25
49	0.45	DEAD	6.427E-03	6.766E-03	85.14
49	0.9	DEAD	6.427E-03	1.253E-02	12.82
49	0.	LIVE	9.104E-03	-1.828E-03	135.11

Table 30: Element Forces - Frames, Part 2 of 2

Frame	Station	OutputCase	T	M2	M3
	m		Kgf-m	Kgf-m	Kgf-m
49	0.45	LIVE	9.104E-03	4.595E-03	75.26
49	0.9	LIVE	9.104E-03	1.102E-02	15.41
49	0.	SX	2.393E-02	0.19	8.69
49	0.45	SX	2.393E-02	4.858E-02	13.6
49	0.9	SX	2.393E-02	0.23	18.51
49	0.	SY	9.689E-02	0.48	9.25
49	0.45	SY	9.689E-02	5.953E-02	16.48
49	0.9	SY	9.689E-02	0.41	23.73
49	0.	WB	3.819E-04	-4.148E-04	-2.701E-02
49	0.45	WB	3.819E-04	-8.546E-05	0.11
49	0.9	WB	3.819E-04	2.438E-04	0.25
50	0.	DEAD	7.374E-03	6.024E-03	12.83
50	0.3325	DEAD	7.374E-03	3.570E-03	-97.96
50	0.665	DEAD	7.374E-03	1.116E-03	-212.14
50	0.	LIVE	9.853E-03	8.735E-03	15.42
50	0.3325	LIVE	9.853E-03	8.012E-03	-86.3
50	0.665	LIVE	9.853E-03	7.290E-03	-188.01
50	0.	SX	1.777E-02	0.35	18.54
50	0.3325	SX	1.777E-02	4.252E-02	4.55
50	0.665	SX	1.777E-02	0.27	11.04
50	0.	SY	7.496E-02	0.66	23.73
50	0.3325	SY	7.496E-02	4.647E-02	16.31
50	0.665	SY	7.496E-02	0.62	10.92
50	0.	WB	3.794E-04	1.706E-04	0.25
50	0.3325	WB	3.794E-04	5.303E-04	0.39
50	0.665	WB	3.794E-04	8.900E-04	0.53
51	0.	DEAD	4.652E-04	6.743E-03	-212.13
51	0.34503	DEAD	4.652E-04	4.563E-03	-115.42
51	0.69005	DEAD	4.652E-04	2.384E-03	-22.36
51	1.03508	DEAD	4.652E-04	2.051E-04	67.04
51	0.	LIVE	1.810E-04	3.171E-03	-188.01
51	0.34503	LIVE	1.810E-04	9.215E-04	-102.48
51	0.69005	LIVE	1.810E-04	-1.328E-03	-16.94
51	1.03508	LIVE	1.810E-04	-3.577E-03	68.6
51	0.	SX	9.883E-03	0.17	10.9
51	0.34503	SX	9.883E-03	1.772E-02	13.66
51	0.69005	SX	9.883E-03	0.16	16.45
51	1.03508	SX	9.883E-03	0.33	19.27
51	0.	SY	4.790E-02	0.4	10.92
51	0.34503	SY	4.790E-02	9.612E-02	9.12
51	0.69005	SY	4.790E-02	0.24	8.22
51	1.03508	SY	4.790E-02	0.55	8.52
51	0.	WB	-4.718E-06	-3.806E-04	0.53
51	0.34503	WB	-4.718E-06	-3.072E-04	0.33
51	0.69005	WB	-4.718E-06	-2.337E-04	0.12
51	1.03508	WB	-4.718E-06	-1.603E-04	-8.643E-02
52	0.	DEAD	3.608E-04	1.539E-02	67.09
52	0.45	DEAD	3.608E-04	1.712E-03	71.15
52	0.9	DEAD	3.608E-04	-1.197E-02	69.
52	0.	LIVE	3.420E-04	1.981E-02	68.64
52	0.45	LIVE	3.420E-04	8.260E-03	68.95
52	0.9	LIVE	3.420E-04	-3.289E-03	69.27
52	0.	SX	1.007E-02	0.35	19.29
52	0.45	SX	1.007E-02	0.11	4.73

Table 30: Element Forces - Frames, Part 2 of 2

Frame	Station	OutputCase	T	M2	M3
	m		Kgf-m	Kgf-m	Kgf-m
52	0.9	SX	1.007E-02	0.15	10.95
52	0.	SY	3.295E-02	0.62	8.53
52	0.45	SY	3.295E-02	0.16	8.79
52	0.9	SY	3.295E-02	0.37	15.6
52	0.	WB	9.906E-06	5.437E-04	-8.564E-02
52	0.45	WB	9.906E-06	6.785E-04	-0.13
52	0.9	WB	9.906E-06	8.133E-04	-0.17
53	0.	DEAD	4.305E-03	2.298E-02	69.
53	0.34503	DEAD	4.305E-03	1.506E-02	-17.98
53	0.69005	DEAD	4.305E-03	7.139E-03	-108.61
53	1.03508	DEAD	4.305E-03	-7.817E-04	-202.9
53	0.	LIVE	6.027E-03	1.791E-02	69.28
53	0.34503	LIVE	6.027E-03	9.525E-03	-13.62
53	0.69005	LIVE	6.027E-03	1.139E-03	-96.53
53	1.03508	LIVE	6.027E-03	-7.247E-03	-179.43
53	0.	SX	1.462E-02	0.12	10.93
53	0.34503	SX	1.462E-02	3.309E-02	6.46
53	0.69005	SX	1.462E-02	0.18	3.05
53	1.03508	SX	1.462E-02	0.32	4.72
53	0.	SY	3.233E-02	0.28	15.59
53	0.34503	SY	3.233E-02	5.968E-02	13.15
53	0.69005	SY	3.233E-02	0.22	11.12
53	1.03508	SY	3.233E-02	0.46	9.78
53	0.	WB	2.189E-04	-2.089E-04	-0.18
53	0.34503	WB	2.189E-04	-2.915E-04	4.331E-02
53	0.69005	WB	2.189E-04	-3.741E-04	0.26
53	1.03508	WB	2.189E-04	-4.568E-04	0.48
54	0.	DEAD	7.000E-03	1.290E-02	-203.2
54	0.4675	DEAD	7.000E-03	-1.805E-02	-62.82
54	0.935	DEAD	7.000E-03	-4.900E-02	70.84
54	0.	LIVE	9.883E-03	2.133E-02	-179.71
54	0.4675	LIVE	9.883E-03	-1.231E-02	-55.75
54	0.935	LIVE	9.883E-03	-4.595E-02	68.2
54	0.	SX	2.155E-02	0.38	4.67
54	0.4675	SX	2.155E-02	3.562E-02	15.95
54	0.935	SX	2.155E-02	0.32	28.08
54	0.	SY	6.261E-02	0.6	9.84
54	0.4675	SY	6.261E-02	7.391E-02	8.93
54	0.935	SY	6.261E-02	0.66	15.74
54	0.	WB	3.409E-04	8.865E-04	0.48
54	0.4675	WB	3.409E-04	2.908E-04	0.34
54	0.935	WB	3.409E-04	-3.049E-04	0.2
55	0.	DEAD	6.718E-03	4.992E-02	70.82
55	0.45	DEAD	6.718E-03	2.915E-02	88.2
55	0.9	DEAD	6.718E-03	8.386E-03	99.36
55	0.	LIVE	8.296E-03	4.318E-02	68.17
55	0.45	LIVE	8.296E-03	2.325E-02	78.11
55	0.9	LIVE	8.296E-03	3.318E-03	88.06
55	0.	SX	1.775E-02	0.31	28.11
55	0.45	SX	1.775E-02	5.734E-02	12.66
55	0.9	SX	1.775E-02	0.34	2.81
55	0.	SY	5.802E-02	0.68	15.75
55	0.45	SY	5.802E-02	0.18	7.49
55	0.9	SY	5.802E-02	0.4	1.09

Table 30: Element Forces - Frames, Part 2 of 2

Frame	Station	OutputCase	T	M2	M3
	m		Kgf-m	Kgf-m	Kgf-m
55	0.	WB	2.156E-04	6.665E-05	0.2
55	0.45	WB	2.156E-04	-6.507E-05	5.389E-02
55	0.9	WB	2.156E-04	-1.968E-04	-8.823E-02
56	0.	DEAD	7.632E-03	-4.401E-03	99.28
56	0.45	DEAD	7.632E-03	-3.924E-02	4.93
56	0.9	DEAD	7.632E-03	-7.408E-02	-95.64
56	0.	LIVE	8.635E-03	-7.401E-04	87.99
56	0.45	LIVE	8.635E-03	-3.713E-02	1.26
56	0.9	LIVE	8.635E-03	-7.351E-02	-85.48
56	0.	SX	2.031E-02	0.3	2.73
56	0.45	SX	2.031E-02	9.208E-02	23.74
56	0.9	SX	2.031E-02	0.45	44.77
56	0.	SY	3.383E-02	0.38	1.06
56	0.45	SY	3.383E-02	0.4	11.66
56	0.9	SY	3.383E-02	1.08	22.43
56	0.	WB	2.459E-04	1.938E-04	-8.762E-02
56	0.45	WB	2.459E-04	-3.425E-04	-0.26
56	0.9	WB	2.459E-04	-8.788E-04	-0.43
57	0.	DEAD	-8.818E-03	2.874E-02	-95.77
57	0.4325	DEAD	-8.818E-03	1.424E-02	-265.24
57	0.865	DEAD	-8.818E-03	-2.653E-04	-440.45
57	0.	LIVE	-8.232E-03	2.786E-02	-85.57
57	0.4325	LIVE	-8.232E-03	1.295E-02	-243.51
57	0.865	LIVE	-8.232E-03	-1.964E-03	-401.45
57	0.	SX	2.139E-02	0.24	44.77
57	0.4325	SX	2.139E-02	0.16	45.79
57	0.865	SX	2.139E-02	0.5	46.87
57	0.	SY	3.875E-02	0.72	22.42
57	0.4325	SY	3.875E-02	0.3	23.18
57	0.865	SY	3.875E-02	0.55	26.04
57	0.	WB	1.035E-04	3.290E-04	-0.43
57	0.4325	WB	1.035E-04	1.633E-04	-0.56
57	0.865	WB	1.035E-04	-2.493E-06	-0.68
58	0.	DEAD	-4.104E-02	-1.411E-02	-441.02
58	0.4675	DEAD	-4.104E-02	7.098E-03	-207.61
58	0.935	DEAD	-4.104E-02	2.831E-02	19.09
58	0.	LIVE	-4.252E-02	-1.309E-02	-401.95
58	0.4675	LIVE	-4.252E-02	6.388E-03	-190.41
58	0.935	LIVE	-4.252E-02	2.586E-02	21.13
58	0.	SX	2.167E-02	0.13	47.13
58	0.4675	SX	2.167E-02	0.11	24.79
58	0.935	SX	2.167E-02	0.13	3.25
58	0.	SY	3.771E-02	0.3	26.09
58	0.4675	SY	3.771E-02	0.4	16.62
58	0.935	SY	3.771E-02	0.53	13.23
58	0.	WB	-3.460E-04	-5.030E-05	-0.68
58	0.4675	WB	-3.460E-04	1.182E-04	-0.43
58	0.935	WB	-3.460E-04	2.868E-04	-0.18
59	0.	DEAD	-3.891E-02	-4.314E-02	18.9
59	0.45	DEAD	-3.891E-02	-5.032E-03	160.14
59	0.9	DEAD	-3.891E-02	3.308E-02	295.16
59	0.	LIVE	-4.227E-02	-4.120E-02	20.94
59	0.45	LIVE	-4.227E-02	-7.639E-03	143.6
59	0.9	LIVE	-4.227E-02	2.592E-02	266.26

Table 30: Element Forces - Frames, Part 2 of 2

Frame	Station	OutputCase	T	M2	M3
	m		Kgf-m	Kgf-m	Kgf-m
59	0.	SX	3.063E-02	0.4	3.3
59	0.45	SX	3.063E-02	0.18	7.94
59	0.9	SX	3.063E-02	9.360E-02	18.04
59	0.	SY	5.386E-02	0.24	13.21
59	0.45	SY	5.386E-02	0.23	10.36
59	0.9	SY	5.386E-02	0.47	13.67
59	0.	WB	-3.459E-04	-2.359E-04	-0.18
59	0.45	WB	-3.459E-04	-3.181E-04	2.896E-02
59	0.9	WB	-3.459E-04	-4.002E-04	0.24
60	0.	DEAD	-1.024E-02	-5.163E-03	294.99
60	0.45	DEAD	-1.024E-02	-1.073E-02	360.69
60	0.9	DEAD	-1.024E-02	-1.629E-02	420.17
60	0.	LIVE	-1.238E-02	-3.267E-04	266.1
60	0.45	LIVE	-1.238E-02	-8.146E-03	321.86
60	0.9	LIVE	-1.238E-02	-1.597E-02	377.61
60	0.	SX	1.871E-02	0.33	18.07
60	0.45	SX	1.871E-02	7.307E-02	26.83
60	0.9	SX	1.871E-02	0.38	35.62
60	0.	SY	2.762E-02	0.9	13.69
60	0.45	SY	2.762E-02	0.24	18.05
60	0.9	SY	2.762E-02	0.5	22.61
60	0.	WB	3.274E-05	8.922E-04	0.24
60	0.45	WB	3.274E-05	1.435E-04	0.3
60	0.9	WB	3.274E-05	-6.052E-04	0.35
61	0.	DEAD	1.661E-02	2.602E-02	420.08
61	0.45	DEAD	1.661E-02	4.569E-02	424.14
61	0.9	DEAD	1.661E-02	6.535E-02	421.99
61	0.	LIVE	1.636E-02	2.363E-02	377.53
61	0.45	LIVE	1.636E-02	3.953E-02	378.82
61	0.9	LIVE	1.636E-02	5.543E-02	380.11
61	0.	SX	2.162E-02	0.51	35.71
61	0.45	SX	2.162E-02	8.569E-02	35.95
61	0.9	SX	2.162E-02	0.35	36.21
61	0.	SY	1.123E-02	0.77	22.65
61	0.45	SY	1.123E-02	8.279E-02	21.77
61	0.9	SY	1.123E-02	0.75	20.9
61	0.	WB	1.890E-04	7.905E-04	0.35
61	0.45	WB	1.890E-04	1.880E-04	0.29
61	0.9	WB	1.890E-04	-4.144E-04	0.23
62	0.	DEAD	1.665E-02	-4.360E-02	422.05
62	0.45	DEAD	1.665E-02	-7.270E-02	356.39
62	0.9	DEAD	1.665E-02	-0.1	284.52
62	0.	LIVE	2.051E-02	-3.950E-02	380.16
62	0.45	LIVE	2.051E-02	-6.396E-02	319.47
62	0.9	LIVE	2.051E-02	-8.843E-02	258.79
62	0.	SX	4.910E-02	0.29	36.27
62	0.45	SX	4.910E-02	7.413E-02	21.9
62	0.9	SX	4.910E-02	0.42	7.58
62	0.	SY	7.943E-02	0.66	20.94
62	0.45	SY	7.943E-02	9.974E-02	12.72
62	0.9	SY	7.943E-02	0.63	6.6
62	0.	WB	1.393E-04	2.205E-04	0.23
62	0.45	WB	1.393E-04	-3.549E-04	0.16
62	0.9	WB	1.393E-04	-9.304E-04	8.339E-02

Table 30: Element Forces - Frames, Part 2 of 2

Frame	Station	OutputCase	T	M2	M3
	m		Kgf-m	Kgf-m	Kgf-m
63	0.	DEAD	-1.468E-02	0.1	284.83
63	0.36076	DEAD	-1.468E-02	0.12	143.78
63	0.72151	DEAD	-1.468E-02	0.13	-1.26
63	0.	LIVE	-5.949E-03	9.074E-02	259.08
63	0.36076	LIVE	-5.949E-03	0.11	128.93
63	0.72151	LIVE	-5.949E-03	0.12	-1.22
63	0.	SX	7.164E-02	0.25	7.51
63	0.36076	SX	7.164E-02	7.075E-02	3.94
63	0.72151	SX	7.164E-02	0.32	0.38
63	0.	SY	0.12	0.31	6.63
63	0.36076	SY	0.12	0.26	3.26
63	0.72151	SY	0.12	0.79	0.25
63	0.	WB	7.874E-05	6.415E-04	8.348E-02
63	0.36076	WB	7.874E-05	3.821E-04	4.157E-02
63	0.72151	WB	7.874E-05	1.227E-04	-3.393E-04
110	0.	DEAD	-1.94	-0.31	-1094.98
110	0.4675	DEAD	-1.94	0.13	-526.04
110	0.935	DEAD	-1.94	0.57	30.43
110	0.	LIVE	-1.61	-0.19	-927.21
110	0.4675	LIVE	-1.61	0.15	-452.04
110	0.935	LIVE	-1.61	0.48	23.13
110	0.	SX	0.83	1.01	1711.11
110	0.4675	SX	0.83	0.87	1386.41
110	0.935	SX	0.83	0.74	1061.76
110	0.	SY	2.31	0.95	1782.27
110	0.4675	SY	2.31	0.94	1408.91
110	0.935	SY	2.31	0.94	1035.95
110	0.	WB	-3.113E-04	6.555E-03	-0.78
110	0.4675	WB	-3.113E-04	5.614E-03	-0.65
110	0.935	WB	-3.113E-04	4.673E-03	-0.52
111	0.	DEAD	-0.71	-0.3	30.81
111	0.45	DEAD	-0.71	-0.11	340.03
111	0.9	DEAD	-0.71	7.950E-02	637.7
111	0.	LIVE	-0.61	-0.31	23.45
111	0.45	LIVE	-0.61	-0.16	279.79
111	0.9	LIVE	-0.61	-5.096E-03	536.13
111	0.	SX	0.18	0.61	1061.7
111	0.45	SX	0.18	0.57	772.13
111	0.9	SX	0.18	0.55	482.56
111	0.	SY	0.6	0.52	1036.06
111	0.45	SY	0.6	0.59	746.13
111	0.9	SY	0.6	0.76	456.28
111	0.	WB	1.367E-04	-6.599E-03	-0.52
111	0.45	WB	1.367E-04	-7.054E-03	-0.4
111	0.9	WB	1.367E-04	-7.510E-03	-0.27
112	0.	DEAD	-5.674E-02	7.199E-02	637.82
112	0.45	DEAD	-5.674E-02	0.18	693.28
112	0.9	DEAD	-5.674E-02	0.29	737.18
112	0.	LIVE	-4.662E-02	0.12	536.23
112	0.45	LIVE	-4.662E-02	0.19	579.58
112	0.9	LIVE	-4.662E-02	0.27	622.92
112	0.	SX	0.44	0.5	482.66
112	0.45	SX	0.44	0.48	207.85
112	0.9	SX	0.44	0.47	67.3

Table 30: Element Forces - Frames, Part 2 of 2

Frame	Station	OutputCase	T	M2	M3
	m		Kgf-m	Kgf-m	Kgf-m
112	0.	SY	0.39	0.85	456.41
112	0.45	SY	0.39	0.63	182.35
112	0.9	SY	0.39	0.46	94.52
112	0.	WB	2.432E-04	7.166E-03	-0.27
112	0.45	WB	2.432E-04	5.374E-03	-0.13
112	0.9	WB	2.432E-04	3.582E-03	9.390E-03
113	0.	DEAD	0.4	-0.14	737.12
113	0.45	DEAD	0.4	-0.21	537.13
113	0.9	DEAD	0.4	-0.29	325.59
113	0.	LIVE	0.35	-0.15	622.87
113	0.45	LIVE	0.35	-0.2	451.7
113	0.9	LIVE	0.35	-0.26	280.53
113	0.	SX	0.4	0.5	67.17
113	0.45	SX	0.4	0.34	343.12
113	0.9	SX	0.4	0.21	619.24
113	0.	SY	0.2	0.35	94.46
113	0.45	SY	0.2	0.28	369.12
113	0.9	SY	0.2	0.36	644.83
113	0.	WB	9.742E-05	-4.302E-03	9.330E-03
113	0.45	WB	9.742E-05	-3.506E-03	0.16
113	0.9	WB	9.742E-05	-2.711E-03	0.31
114	0.	DEAD	0.6	0.52	325.41
114	0.45	DEAD	0.6	0.48	-118.84
114	0.9	DEAD	0.6	0.44	-574.65
114	0.	LIVE	0.51	0.42	280.37
114	0.45	LIVE	0.51	0.4	-96.4
114	0.9	LIVE	0.51	0.37	-473.18
114	0.	SX	9.087E-02	0.14	619.18
114	0.45	SX	9.087E-02	0.3	912.85
114	0.9	SX	9.087E-02	0.53	1206.55
114	0.	SY	0.53	0.7	644.88
114	0.45	SY	0.53	0.25	912.72
114	0.9	SY	0.53	0.33	1180.89
114	0.	WB	-1.477E-04	5.288E-04	0.31
114	0.45	WB	-1.477E-04	1.379E-03	0.48
114	0.9	WB	-1.477E-04	2.229E-03	0.64
115	0.	DEAD	2.3	0.71	-574.85
115	0.465	DEAD	2.3	-2.33	-1233.4
115	0.	LIVE	1.86	0.53	-473.35
115	0.465	LIVE	1.86	-1.84	-1024.51
115	0.	SX	0.75	0.55	1206.7
115	0.465	SX	0.75	0.77	1532.33
115	0.	SY	3.64	0.51	1181.13
115	0.465	SY	3.64	0.91	1413.63
115	0.	WB	-4.624E-04	-4.345E-03	0.64
115	0.465	WB	-4.624E-04	3.982E-03	0.84
116	0.	DEAD	-1.56	-2.31	-686.
116	0.435	DEAD	-1.56	1.04	-282.68
116	0.	LIVE	-1.22	-1.86	-577.1
116	0.435	LIVE	-1.22	0.83	-239.32
116	0.	SX	1.05	0.72	1695.05
116	0.435	SX	1.05	0.67	1301.71
116	0.	SY	2.72	2.08	1798.25
116	0.435	SY	2.72	0.32	1313.63

Table 30: Element Forces - Frames, Part 2 of 2

Frame	Station	OutputCase	T	M2	M3
	m		Kgf-m	Kgf-m	Kgf-m
116	0.	WB	-1.897E-04	-1.784E-05	-0.22
116	0.435	WB	-1.897E-04	2.813E-04	-0.26
117	0.	DEAD	1.035E-02	0.29	-282.73
117	0.45	DEAD	1.035E-02	0.36	-27.72
117	0.9	DEAD	1.035E-02	0.43	215.73
117	0.	LIVE	1.503E-02	0.22	-239.37
117	0.45	LIVE	1.503E-02	0.29	-29.66
117	0.9	LIVE	1.503E-02	0.37	180.05
117	0.	SX	8.363E-02	0.4	1301.56
117	0.45	SX	8.363E-02	0.2	905.81
117	0.9	SX	8.363E-02	0.51	510.13
117	0.	SY	0.49	0.52	1313.56
117	0.45	SY	0.49	0.47	891.13
117	0.9	SY	0.49	1.23	469.36
117	0.	WB	-2.936E-04	-1.684E-03	-0.26
117	0.45	WB	-2.936E-04	1.323E-05	-0.25
117	0.9	WB	-2.936E-04	1.710E-03	-0.24
118	0.	DEAD	-3.943E-02	-0.1	215.75
118	0.45	DEAD	-3.943E-02	-5.432E-02	262.83
118	0.9	DEAD	-3.943E-02	-6.785E-03	298.36
118	0.	LIVE	-4.677E-02	-9.807E-02	180.08
118	0.45	LIVE	-4.677E-02	-4.496E-02	216.18
118	0.9	LIVE	-4.677E-02	8.146E-03	252.28
118	0.	SX	0.4	0.57	510.19
118	0.45	SX	0.4	0.2	124.64
118	0.9	SX	0.4	0.52	261.53
118	0.	SY	0.55	1.65	469.51
118	0.45	SY	0.55	0.45	89.03
118	0.9	SY	0.55	0.88	299.69
118	0.	WB	-7.020E-04	-2.046E-03	-0.24
118	0.45	WB	-7.020E-04	-7.541E-05	-0.15
118	0.9	WB	-7.020E-04	1.896E-03	-6.569E-02
119	0.	DEAD	0.1	0.29	298.35
119	0.45	DEAD	0.1	0.28	136.54
119	0.9	DEAD	0.1	0.27	-36.83
119	0.	LIVE	5.918E-02	0.23	252.28
119	0.45	LIVE	5.918E-02	0.22	114.11
119	0.9	LIVE	5.918E-02	0.22	-24.06
119	0.	SX	0.25	0.53	261.43
119	0.45	SX	0.25	0.12	654.92
119	0.9	SX	0.25	0.65	1048.52
119	0.	SY	0.17	1.15	299.6
119	0.45	SY	0.17	0.24	671.67
119	0.9	SY	0.17	1.45	1044.64
119	0.	WB	-9.936E-04	-1.573E-03	-6.538E-02
119	0.45	WB	-9.936E-04	-4.487E-04	9.478E-02
119	0.9	WB	-9.936E-04	6.757E-04	0.25
120	0.	DEAD	1.18	0.66	-36.88
120	0.3325	DEAD	1.18	-0.3	-293.84
120	0.665	DEAD	1.18	-1.26	-557.1
120	0.	LIVE	0.93	0.51	-24.1
120	0.3325	LIVE	0.93	-0.24	-240.42
120	0.665	LIVE	0.93	-0.99	-456.74
120	0.	SX	0.46	0.46	1048.57

Table 30: Element Forces - Frames, Part 2 of 2

Frame	Station	OutputCase	T	M2	M3
	m		Kgf-m	Kgf-m	Kgf-m
120	0.3325	SX	0.46	0.11	1355.83
120	0.665	SX	0.46	0.59	1663.15
120	0.	SY	2.12	1.53	1044.75
120	0.3325	SY	2.12	0.1	1306.03
120	0.665	SY	2.12	1.48	1567.91
120	0.	WB	-4.148E-04	-4.145E-03	0.26
120	0.3325	WB	-4.148E-04	8.102E-04	0.41
120	0.665	WB	-4.148E-04	5.765E-03	0.57
121	0.	DEAD	-0.65	-0.62	-332.18
121	0.34503	DEAD	-0.65	-0.32	-166.42
121	0.69005	DEAD	-0.65	-1.498E-02	-7.46
121	1.03508	DEAD	-0.65	0.29	144.71
121	0.	LIVE	-0.52	-0.47	-285.71
121	0.34503	LIVE	-0.52	-0.23	-148.72
121	0.69005	LIVE	-0.52	1.645E-03	-11.72
121	1.03508	LIVE	-0.52	0.24	125.27
121	0.	SX	0.4	0.77	1897.58
121	0.34503	SX	0.4	0.39	1457.4
121	0.69005	SX	0.4	0.12	1017.26
121	1.03508	SX	0.4	0.43	577.19
121	0.	SY	1.09	1.47	1952.72
121	0.34503	SY	1.09	0.69	1483.94
121	0.69005	SY	1.09	0.29	1015.39
121	1.03508	SY	1.09	1.	547.64
121	0.	WB	-1.891E-04	4.251E-03	-0.57
121	0.34503	WB	-1.891E-04	2.917E-03	-0.43
121	0.69005	WB	-1.891E-04	1.582E-03	-0.29
121	1.03508	WB	-1.891E-04	2.476E-04	-0.16
122	0.	DEAD	8.251E-03	0.48	144.72
122	0.45	DEAD	8.251E-03	0.44	146.42
122	0.9	DEAD	8.251E-03	0.39	136.57
122	0.	LIVE	8.951E-03	0.38	125.28
122	0.45	LIVE	8.951E-03	0.33	124.03
122	0.9	LIVE	8.951E-03	0.27	122.78
122	0.	SX	0.41	0.43	577.24
122	0.45	SX	0.41	0.44	11.87
122	0.9	SX	0.41	1.26	560.73
122	0.	SY	0.48	1.14	547.74
122	0.45	SY	0.48	0.54	31.28
122	0.9	SY	0.48	1.93	584.82
122	0.	WB	4.336E-04	-1.713E-03	-0.16
122	0.45	WB	4.336E-04	-3.094E-03	-1.454E-03
122	0.9	WB	4.336E-04	-4.474E-03	0.16
123	0.	DEAD	0.66	0.35	136.55
123	0.34503	DEAD	0.66	-2.842E-02	-21.99
123	0.69005	DEAD	0.66	-0.41	-187.34
123	1.03508	DEAD	0.66	-0.79	-359.47
123	0.	LIVE	0.53	0.31	122.76
123	0.34503	LIVE	0.53	-3.502E-03	-16.24
123	0.69005	LIVE	0.53	-0.32	-155.24
123	1.03508	LIVE	0.53	-0.64	-294.24
123	0.	SX	0.29	0.87	560.66
123	0.34503	SX	0.29	0.46	1010.24
123	0.69005	SX	0.29	0.14	1459.92

Table 30: Element Forces - Frames, Part 2 of 2

Frame	Station	OutputCase	T	M2	M3
	m		Kgf-m	Kgf-m	Kgf-m
123	1.03508	SX	0.29	0.42	1909.62
123	0.	SY	1.03	1.52	584.78
123	0.34503	SY	1.03	0.68	1007.21
123	0.69005	SY	1.03	0.43	1430.4
123	1.03508	SY	1.03	1.22	1853.84
123	0.	WB	1.707E-04	1.431E-03	0.16
123	0.34503	WB	1.707E-04	1.881E-03	0.26
123	0.69005	WB	1.707E-04	2.330E-03	0.37
123	1.03508	WB	1.707E-04	2.780E-03	0.48
124	0.	DEAD	-0.83	-0.65	-446.16
124	0.4675	DEAD	-0.83	-7.430E-02	-150.76
124	0.935	DEAD	-0.83	0.5	132.16
124	0.	LIVE	-0.65	-0.49	-381.61
124	0.4675	LIVE	-0.65	-6.171E-02	-135.15
124	0.935	LIVE	-0.65	0.36	111.32
124	0.	SX	0.54	0.78	1682.61
124	0.4675	SX	0.54	0.32	1238.8
124	0.935	SX	0.54	1.24	795.1
124	0.	SY	0.92	1.73	1725.81
124	0.4675	SY	0.92	0.14	1250.79
124	0.935	SY	0.92	1.75	776.56
124	0.	WB	1.019E-03	5.238E-03	-0.6
124	0.4675	WB	1.019E-03	2.322E-04	-0.46
124	0.935	WB	1.019E-03	-4.774E-03	-0.31
125	0.	DEAD	-9.190E-02	0.26	132.2
125	0.45	DEAD	-9.190E-02	6.454E-02	208.45
125	0.9	DEAD	-9.190E-02	-0.13	273.15
125	0.	LIVE	-5.705E-02	0.23	111.35
125	0.45	LIVE	-5.705E-02	4.375E-02	172.4
125	0.9	LIVE	-5.705E-02	-0.14	233.45
125	0.	SX	0.38	0.93	795.12
125	0.45	SX	0.38	0.2	375.31
125	0.9	SX	0.38	1.27	46.33
125	0.	SY	0.47	1.39	776.62
125	0.45	SY	0.47	0.8	354.68
125	0.9	SY	0.47	2.9	75.53
125	0.	WB	1.443E-03	1.380E-03	-0.31
125	0.45	WB	1.443E-03	-7.561E-04	-0.16
125	0.9	WB	1.443E-03	-2.892E-03	-2.455E-03
126	0.	DEAD	-1.546E-02	0.2	273.16
126	0.45	DEAD	-1.546E-02	0.34	140.37
126	0.9	DEAD	-1.546E-02	0.48	-3.98
126	0.	LIVE	-1.268E-02	0.18	233.46
126	0.45	LIVE	-1.268E-02	0.28	118.92
126	0.9	LIVE	-1.268E-02	0.39	4.37
126	0.	SX	0.39	0.72	46.21
126	0.45	SX	0.39	0.31	472.81
126	0.9	SX	0.39	1.15	900.89
126	0.	SY	0.36	2.16	75.43
126	0.45	SY	0.36	0.68	487.82
126	0.9	SY	0.36	1.49	906.1
126	0.	WB	1.114E-03	1.142E-03	-2.926E-03
126	0.45	WB	1.114E-03	-8.333E-05	0.17
126	0.9	WB	1.114E-03	-1.309E-03	0.35

Table 30: Element Forces - Frames, Part 2 of 2

Frame	Station	OutputCase	T	M2	M3
	m		Kgf-m	Kgf-m	Kgf-m
127	0.	DEAD	0.71	0.5	-3.96
127	0.4325	DEAD	0.71	-0.29	-328.73
127	0.865	DEAD	0.71	-1.09	-664.16
127	0.	LIVE	0.55	0.39	4.4
127	0.4325	LIVE	0.55	-0.25	-272.55
127	0.865	LIVE	0.55	-0.89	-549.49
127	0.	SX	0.46	0.28	900.88
127	0.4325	SX	0.46	0.25	1338.05
127	0.865	SX	0.46	0.41	1775.35
127	0.	SY	1.02	0.41	906.12
127	0.4325	SY	1.02	1.27	1321.75
127	0.865	SY	1.02	2.3	1738.09
127	0.	WB	-9.513E-04	-1.652E-03	0.35
127	0.4325	WB	-9.513E-04	1.333E-04	0.52
127	0.865	WB	-9.513E-04	1.919E-03	0.69
128	0.	DEAD	-1.5	-1.08	-1247.98
128	0.4675	DEAD	-1.5	-0.24	-644.67
128	0.935	DEAD	-1.5	0.6	-53.83
128	0.	LIVE	-1.27	-0.87	-1053.62
128	0.4675	LIVE	-1.27	-0.2	-547.85
128	0.935	LIVE	-1.27	0.48	-42.07
128	0.	SX	0.8	0.89	1474.8
128	0.4675	SX	0.8	0.57	1180.71
128	0.935	SX	0.8	0.48	886.78
128	0.	SY	0.9	0.98	1496.77
128	0.4675	SY	0.9	0.72	1189.13
128	0.935	SY	0.9	0.81	882.18
128	0.	WB	6.359E-04	2.782E-03	2.633E-02
128	0.4675	WB	6.359E-04	2.792E-04	-3.317E-02
128	0.935	WB	6.359E-04	-2.224E-03	-9.267E-02
129	0.	DEAD	-0.56	0.29	-53.6
129	0.45	DEAD	-0.56	0.24	290.57
129	0.9	DEAD	-0.56	0.2	623.18
129	0.	LIVE	-0.51	0.23	-41.87
129	0.45	LIVE	-0.51	0.2	243.72
129	0.9	LIVE	-0.51	0.17	529.3
129	0.	SX	0.12	0.55	886.71
129	0.45	SX	0.12	0.31	618.29
129	0.9	SX	0.12	0.87	349.94
129	0.	SY	0.33	1.64	882.16
129	0.45	SY	0.33	1.02	612.39
129	0.9	SY	0.33	0.6	342.9
129	0.	WB	-8.370E-04	2.881E-04	-9.242E-02
129	0.45	WB	-8.370E-04	-1.296E-04	-0.12
129	0.9	WB	-8.370E-04	-5.474E-04	-0.15
130	0.	DEAD	-0.25	-5.710E-02	623.33
130	0.45	DEAD	-0.25	1.047E-02	717.82
130	0.9	DEAD	-0.25	7.804E-02	800.76
130	0.	LIVE	-0.23	-5.397E-02	529.44
130	0.45	LIVE	-0.23	4.447E-03	604.18
130	0.9	LIVE	-0.23	6.286E-02	678.93
130	0.	SX	0.35	1.51	350.
130	0.45	SX	0.35	0.4	91.9
130	0.9	SX	0.35	0.76	167.19

Table 30: Element Forces - Frames, Part 2 of 2

Frame	Station	OutputCase	T	M2	M3
	m		Kgf-m	Kgf-m	Kgf-m
130	0.	SY	0.45	1.17	343.
130	0.45	SY	0.45	0.43	87.58
130	0.9	SY	0.45	1.49	171.99
130	0.	WB	-8.505E-04	4.380E-04	-0.15
130	0.45	WB	-8.505E-04	-2.808E-04	-0.13
130	0.9	WB	-8.505E-04	-9.995E-04	-0.11
131	0.	DEAD	0.26	0.13	800.76
131	0.45	DEAD	0.26	-0.11	637.53
131	0.9	DEAD	0.26	-0.35	462.75
131	0.	LIVE	0.24	0.11	678.94
131	0.45	LIVE	0.24	-9.668E-02	536.38
131	0.9	LIVE	0.24	-0.3	393.82
131	0.	SX	0.37	1.14	167.08
131	0.45	SX	0.37	0.23	428.77
131	0.9	SX	0.37	1.49	690.55
131	0.	SY	0.41	2.12	171.87
131	0.45	SY	0.41	0.49	430.84
131	0.9	SY	0.41	1.51	690.2
131	0.	WB	-3.749E-04	1.178E-03	-0.11
131	0.45	WB	-3.749E-04	-6.538E-04	-3.718E-02
131	0.9	WB	-3.749E-04	-2.485E-03	3.153E-02
132	0.	DEAD	1.01	0.47	462.54
132	0.45	DEAD	1.01	0.26	47.59
132	0.9	DEAD	1.01	3.666E-02	-378.91
132	0.	LIVE	0.9	0.4	393.63
132	0.45	LIVE	0.9	0.22	39.2
132	0.9	LIVE	0.9	2.874E-02	-315.23
132	0.	SX	0.18	1.34	690.48
132	0.45	SX	0.18	0.23	971.72
132	0.9	SX	0.18	0.91	1252.97
132	0.	SY	0.29	1.58	690.13
132	0.45	SY	0.29	0.36	969.76
132	0.9	SY	0.29	1.73	1249.44
132	0.	WB	1.711E-04	2.478E-03	3.154E-02
132	0.45	WB	1.711E-04	8.849E-04	0.12
132	0.9	WB	1.711E-04	-7.084E-04	0.2
133	0.	DEAD	2.57	0.21	-379.41
133	0.3075	DEAD	2.57	-0.5	-800.4
133	0.615	DEAD	2.57	-1.2	-1226.78
133	0.	LIVE	2.17	0.11	-315.67
133	0.3075	LIVE	2.17	-0.46	-672.12
133	0.615	LIVE	2.17	-1.03	-1028.58
133	0.	SX	0.92	1.14	1253.07
133	0.3075	SX	0.92	0.73	1465.68
133	0.615	SX	0.92	1.55	1678.38
133	0.	SY	1.4	2.63	1249.52
133	0.3075	SY	1.4	1.41	1466.19
133	0.615	SY	1.4	1.13	1683.09
133	0.	WB	4.911E-04	-3.781E-04	0.2
133	0.3075	WB	4.911E-04	-2.163E-03	0.27
133	0.615	WB	4.911E-04	-3.948E-03	0.33
134	0.	DEAD	1.9	0.55	-1131.54
134	0.4675	DEAD	1.9	0.13	-525.86
134	0.935	DEAD	1.9	-0.3	67.35

Table 30: Element Forces - Frames, Part 2 of 2

Frame	Station	OutputCase	T	M2	M3
	m		Kgf-m	Kgf-m	Kgf-m
134	0.	LIVE	1.57	0.57	-985.75
134	0.4675	LIVE	1.57	0.2	-468.59
134	0.935	LIVE	1.57	-0.16	48.57
134	0.	SX	0.66	0.62	1618.65
134	0.4675	SX	0.66	1.	1312.4
134	0.935	SX	0.66	1.53	1006.32
134	0.	SY	3.01	1.01	527.98
134	0.4675	SY	3.01	1.53	429.79
134	0.935	SY	3.01	2.13	349.
134	0.	WB	7.467E-04	1.399E-02	-1.89
134	0.4675	WB	7.467E-04	1.132E-02	-1.61
134	0.935	WB	7.467E-04	8.655E-03	-1.34
135	0.	DEAD	-2.62	0.75	67.72
135	0.33238	DEAD	-2.62	-0.3	323.7
135	0.66477	DEAD	-2.62	-1.35	573.37
135	0.	LIVE	-2.09	1.16	48.89
135	0.33238	LIVE	-2.09	-0.43	268.34
135	0.66477	LIVE	-2.09	-2.03	487.79
135	0.	SX	1.49	4.47	1006.27
135	0.33238	SX	1.49	2.05	807.58
135	0.66477	SX	1.49	8.55	609.01
135	0.	SY	0.54	7.52	348.89
135	0.33238	SY	0.54	3.06	297.21
135	0.66477	SY	0.54	13.64	253.51
135	0.	WB	-2.029E-03	5.956E-02	-1.34
135	0.33238	WB	-2.029E-03	-2.218E-02	-1.14
135	0.66477	WB	-2.029E-03	-0.1	-0.95
136	0.	DEAD	10.09	-1.26	573.19
136	0.23523	DEAD	10.09	1.34	694.8
136	0.	LIVE	8.17	-2.57	487.63
136	0.23523	LIVE	8.17	2.72	594.41
136	0.	SX	3.55	13.61	608.91
136	0.23523	SX	3.55	15.58	469.72
136	0.	SY	3.47	22.33	253.4
136	0.23523	SY	3.47	24.91	230.91
136	0.	WB	3.810E-03	-0.17	-0.95
136	0.23523	WB	3.810E-03	0.18	-0.82
137	0.	DEAD	0.13	0.24	694.94
137	0.45	DEAD	0.13	0.15	687.32
137	0.9	DEAD	0.13	6.571E-02	668.15
137	0.	LIVE	9.996E-02	0.32	594.53
137	0.45	LIVE	9.996E-02	0.21	585.43
137	0.9	LIVE	9.996E-02	9.944E-02	576.33
137	0.	SX	0.4	0.58	469.81
137	0.45	SX	0.4	0.8	219.79
137	0.9	SX	0.4	1.12	56.25
137	0.	SY	0.24	1.23	230.84
137	0.45	SY	0.24	1.23	225.81
137	0.9	SY	0.24	1.24	256.45
137	0.	WB	-1.144E-03	1.377E-02	-0.82
137	0.45	WB	-1.144E-03	9.985E-03	-0.55
137	0.9	WB	-1.144E-03	6.197E-03	-0.29
138	0.	DEAD	-0.42	-0.32	668.1
138	0.45	DEAD	-0.42	-0.28	406.37

Table 30: Element Forces - Frames, Part 2 of 2

Frame	Station	OutputCase	T	M2	M3
	m		Kgf-m	Kgf-m	Kgf-m
138	0.9	DEAD	-0.42	-0.25	133.08
138	0.	LIVE	-0.38	-0.28	576.28
138	0.45	LIVE	-0.38	-0.26	354.46
138	0.9	LIVE	-0.38	-0.23	132.64
138	0.	SX	0.33	1.05	56.18
138	0.45	SX	0.33	0.42	293.72
138	0.9	SX	0.33	0.34	545.89
138	0.	SY	0.17	1.16	256.44
138	0.45	SY	0.17	0.82	331.26
138	0.9	SY	0.17	0.54	418.16
138	0.	WB	-1.398E-03	-3.989E-03	-0.29
138	0.45	WB	-1.398E-03	-3.427E-03	3.556E-02
138	0.9	WB	-1.398E-03	-2.865E-03	0.36
139	0.	DEAD	-10.8	-4.79	132.87
139	0.17152	DEAD	-10.8	5.47	-59.2
139	0.	LIVE	-8.36	-3.25	132.46
139	0.17152	LIVE	-8.36	3.94	-30.25
139	0.	SX	4.11	4.77	545.84
139	0.17152	SX	4.11	4.63	647.62
139	0.	SY	4.44	16.94	418.23
139	0.17152	SY	4.44	15.44	454.93
139	0.	WB	1.944E-02	6.987E-02	0.36
139	0.17152	WB	1.944E-02	-5.537E-02	0.54
140	0.	DEAD	1.64	1.23	-58.8
140	0.36424	DEAD	1.64	0.18	-295.62
140	0.72848	DEAD	1.64	-0.87	-540.
140	0.	LIVE	1.21	0.83	-29.91
140	0.36424	LIVE	1.21	0.13	-259.56
140	0.72848	LIVE	1.21	-0.56	-489.21
140	0.	SX	0.92	1.88	646.23
140	0.36424	SX	0.92	0.31	913.9
140	0.72848	SX	0.92	1.45	1187.69
140	0.	SY	0.46	6.66	455.
140	0.36424	SY	0.46	1.11	298.77
140	0.72848	SY	0.46	4.46	592.18
140	0.	WB	-5.146E-03	-1.878E-02	0.54
140	0.36424	WB	-5.146E-03	-9.767E-04	-0.93
140	0.72848	WB	-5.146E-03	1.682E-02	-2.4
141	0.	DEAD	-2.84	-1.41	-540.24
141	0.465	DEAD	-2.84	1.34	-1027.79
141	0.	LIVE	-2.36	-1.06	-489.41
141	0.465	LIVE	-2.36	0.99	-934.15
141	0.	SX	0.94	1.15	1187.84
141	0.465	SX	0.94	1.35	1553.89
141	0.	SY	2.2	2.89	592.14
141	0.465	SY	2.2	0.97	1152.25
141	0.	WB	-5.277E-03	7.839E-03	-2.4
141	0.465	WB	-5.277E-03	-9.490E-03	-4.11
142	0.	DEAD	1.98	1.59	-1028.88
142	0.435	DEAD	1.98	-0.64	-449.07
142	0.	LIVE	1.57	1.16	-1106.93
142	0.435	LIVE	1.57	-0.48	-500.01
142	0.	SX	0.56	3.62	1651.32
142	0.435	SX	0.56	1.24	1243.95

Table 30: Element Forces - Frames, Part 2 of 2

Frame	Station	OutputCase	T	M2	M3
	m		Kgf-m	Kgf-m	Kgf-m
142	0.	SY	2.33	8.65	550.37
142	0.435	SY	2.33	2.43	423.6
142	0.	WB	8.081E-04	-1.386E-02	-22.8
142	0.435	WB	8.081E-04	5.335E-03	-11.32
143	0.	DEAD	-0.15	-0.21	-449.14
143	0.45	DEAD	-0.15	-0.26	-0.23
143	0.9	DEAD	-0.15	-0.3	437.12
143	0.	LIVE	-0.24	-0.16	-500.09
143	0.45	LIVE	-0.24	-0.19	-1.84
143	0.9	LIVE	-0.24	-0.23	496.4
143	0.	SX	8.043E-02	0.35	1243.82
143	0.45	SX	8.043E-02	0.37	841.7
143	0.9	SX	8.043E-02	0.87	439.6
143	0.	SY	0.21	0.35	423.54
143	0.45	SY	0.21	1.04	288.86
143	0.9	SY	0.21	2.24	154.64
143	0.	WB	-9.942E-03	6.993E-04	-11.33
143	0.45	WB	-9.942E-03	1.860E-03	0.69
143	0.9	WB	-9.942E-03	3.020E-03	12.71
144	0.	DEAD	-10.23	-2.59	437.12
144	0.17044	DEAD	-10.23	1.64	532.51
144	0.	LIVE	-9.33	-2.44	496.38
144	0.17044	LIVE	-9.33	1.51	623.17
144	0.	SX	2.18	1.26	439.66
144	0.17044	SX	2.18	1.73	292.35
144	0.	SY	1.06	5.11	154.66
144	0.17044	SY	1.06	6.92	104.02
144	0.	WB	-0.13	-4.001E-02	12.71
144	0.17044	WB	-0.13	2.134E-02	17.43
145	0.	DEAD	2.41	1.11	532.6
145	0.36478	DEAD	2.41	0.24	570.38
145	0.72956	DEAD	2.41	-0.62	600.57
145	0.	LIVE	2.18	1.04	623.27
145	0.36478	LIVE	2.18	0.22	652.17
145	0.72956	LIVE	2.18	-0.61	681.06
145	0.	SX	7.726E-02	1.44	292.52
145	0.36478	SX	7.726E-02	0.28	22.57
145	0.72956	SX	7.726E-02	1.62	247.65
145	0.	SY	5.472E-02	3.02	104.06
145	0.36478	SY	5.472E-02	0.47	9.38
145	0.72956	SY	5.472E-02	2.21	98.47
145	0.	WB	2.883E-02	1.543E-02	17.43
145	0.36478	WB	2.883E-02	2.252E-03	17.28
145	0.72956	WB	2.883E-02	-1.093E-02	17.12
146	0.	DEAD	-6.7	-2.27	600.57
146	0.34744	DEAD	-6.7	2.23	484.23
146	0.	LIVE	-6.62	-2.19	681.08
146	0.34744	LIVE	-6.62	2.12	582.26
146	0.	SX	1.12	4.65	247.57
146	0.34744	SX	1.12	0.66	507.76
146	0.	SY	0.36	4.68	98.41
146	0.34744	SY	0.36	3.54	199.82
146	0.	WB	-0.13	-3.740E-02	17.12
146	0.34744	WB	-0.13	3.606E-02	17.37

Table 30: Element Forces - Frames, Part 2 of 2

Frame	Station	OutputCase	T	M2	M3
	m		Kgf-m	Kgf-m	Kgf-m
147	0.	DEAD	4.35	4.022E-02	484.62
147	0.27628	DEAD	4.35	-0.45	181.55
147	0.55256	DEAD	4.35	-0.94	-125.89
147	0.	LIVE	4.49	0.34	582.76
147	0.27628	LIVE	4.49	-0.32	213.81
147	0.55256	LIVE	4.49	-0.98	-155.14
147	0.	SX	0.97	11.12	507.67
147	0.27628	SX	0.97	2.01	748.39
147	0.55256	SX	0.97	7.11	989.11
147	0.	SY	0.81	15.36	199.79
147	0.27628	SY	0.81	2.6	288.81
147	0.55256	SY	0.81	10.17	377.94
147	0.	WB	9.923E-02	2.832E-02	17.39
147	0.27628	WB	9.923E-02	4.213E-03	6.1
147	0.55256	WB	9.923E-02	-1.990E-02	-5.18
148	0.	DEAD	-1.01	-0.74	-125.89
148	0.3325	DEAD	-1.01	0.37	-622.3
148	0.665	DEAD	-1.01	1.47	-1125.01
148	0.	LIVE	-0.68	-0.62	-155.11
148	0.3325	LIVE	-0.68	0.28	-712.41
148	0.665	LIVE	-0.68	1.18	-1269.72
148	0.	SX	0.76	0.4	989.18
148	0.3325	SX	0.76	0.6	1286.41
148	0.665	SX	0.76	1.46	1583.69
148	0.	SY	1.84	1.6	377.91
148	0.3325	SY	1.84	0.31	504.95
148	0.665	SY	1.84	2.01	632.98
148	0.	WB	1.126E-02	-1.529E-03	-5.18
148	0.3325	WB	1.126E-02	-2.267E-03	-18.69
148	0.665	WB	1.126E-02	-3.004E-03	-32.21
149	0.	DEAD	0.43	0.75	-871.21
149	0.34503	DEAD	0.43	0.36	-469.93
149	0.69005	DEAD	0.43	-2.035E-02	-75.45
149	1.03508	DEAD	0.43	-0.4	312.24
149	0.	LIVE	0.21	0.61	-1043.41
149	0.34503	LIVE	0.21	0.3	-573.5
149	0.69005	LIVE	0.21	-3.412E-03	-103.59
149	1.03508	LIVE	0.21	-0.31	366.32
149	0.	SX	0.25	1.46	1862.3
149	0.34503	SX	0.25	0.75	1418.62
149	0.69005	SX	0.25	8.628E-02	974.98
149	1.03508	SX	0.25	0.69	531.45
149	0.	SY	1.2	2.51	675.43
149	0.34503	SY	1.2	1.16	522.14
149	0.69005	SY	1.2	0.34	370.25
149	1.03508	SY	1.2	1.62	222.64
149	0.	WB	-1.187E-02	-1.572E-03	-30.42
149	0.34503	WB	-1.187E-02	-9.073E-05	-17.18
149	0.69005	WB	-1.187E-02	1.391E-03	-3.94
149	1.03508	WB	-1.187E-02	2.873E-03	9.3
150	0.	DEAD	-21.54	-1.99	312.21
150	0.12932	DEAD	-21.54	-1.16	402.47
150	0.	LIVE	-23.82	-1.96	366.27
150	0.12932	LIVE	-23.82	-1.04	491.49

Table 30: Element Forces - Frames, Part 2 of 2

Frame	Station	OutputCase	T	M2	M3
	m		Kgf-m	Kgf-m	Kgf-m
150	0.	SX	3.19	4.13	531.51
150	0.12932	SX	3.19	7.12	370.21
150	0.	SY	2.81	16.15	222.63
150	0.12932	SY	2.81	22.3	162.7
150	0.	WB	-0.63	-3.446E-02	9.3
150	0.12932	WB	-0.63	-8.654E-03	14.3
151	0.	DEAD	3.55	0.57	402.42
151	0.38534	DEAD	3.55	-0.17	434.49
151	0.77068	DEAD	3.55	-0.91	458.09
151	0.	LIVE	3.91	0.63	491.44
151	0.38534	LIVE	3.91	-0.11	534.34
151	0.77068	LIVE	3.91	-0.85	577.23
151	0.	SX	0.16	0.26	370.26
151	0.38534	SX	0.16	0.67	95.6
151	0.77068	SX	0.16	1.38	560.36
151	0.	SY	0.44	1.71	162.72
151	0.38534	SY	0.44	0.8	42.32
151	0.77068	SY	0.44	1.57	197.38
151	0.	WB	0.1	1.700E-02	14.3
151	0.38534	WB	0.1	3.724E-03	16.22
151	0.77068	WB	0.1	-9.551E-03	18.14
152	0.	DEAD	-10.47	-0.5	458.09
152	0.30632	DEAD	-10.47	0.97	349.02
152	0.	LIVE	-12.07	-1.19	577.24
152	0.30632	LIVE	-12.07	1.25	496.23
152	0.	SX	0.53	4.8	560.32
152	0.30632	SX	0.53	5.33	933.08
152	0.	SY	1.45	7.63	197.37
152	0.30632	SY	1.45	15.65	346.17
152	0.	WB	-0.34	-7.331E-02	18.14
152	0.30632	WB	-0.34	5.112E-02	19.94
153	0.	DEAD	3.8	-0.72	349.77
153	0.36438	DEAD	3.8	0.14	-267.38
153	0.72876	DEAD	3.8	1.	-892.09
153	0.	LIVE	4.81	1.925E-02	497.3
153	0.36438	LIVE	4.81	0.22	-284.11
153	0.72876	LIVE	4.81	0.42	-1065.52
153	0.	SX	0.62	12.01	933.24
153	0.36438	SX	0.62	2.56	1361.56
153	0.72876	SX	0.62	6.91	1789.93
153	0.	SY	1.86	14.11	346.2
153	0.36438	SY	1.86	3.34	528.39
153	0.72876	SY	1.86	7.55	712.64
153	0.	WB	0.16	5.055E-02	19.98
153	0.36438	WB	0.16	8.014E-03	-5.44
153	0.72876	WB	0.16	-3.452E-02	-30.87
154	0.	DEAD	0.88	1.01	-528.59
154	0.4675	DEAD	0.88	0.24	-235.61
154	0.935	DEAD	0.88	-0.53	44.9
154	0.	LIVE	0.7	0.78	-504.3
154	0.4675	LIVE	0.7	0.17	-252.39
154	0.935	LIVE	0.7	-0.43	-0.47
154	0.	SX	0.37	0.86	1671.85
154	0.4675	SX	0.37	0.29	1221.91

Table 30: Element Forces - Frames, Part 2 of 2

Frame	Station	OutputCase	T	M2	M3
	m		Kgf-m	Kgf-m	Kgf-m
154	0.935	SX	0.37	1.23	772.02
154	0.	SY	1.17	1.71	611.01
154	0.4675	SY	1.17	0.2	452.3
154	0.935	SY	1.17	1.54	295.15
154	0.	WB	-4.008E-04	-6.262E-03	-6.47
154	0.4675	WB	-4.008E-04	-2.226E-03	-5.31
154	0.935	WB	-4.008E-04	1.810E-03	-4.16
155	0.	DEAD	5.737E-02	-0.3	44.95
155	0.45	DEAD	5.737E-02	-0.31	119.62
155	0.9	DEAD	5.737E-02	-0.32	182.73
155	0.	LIVE	1.574E-02	-0.23	-0.44
155	0.45	LIVE	1.574E-02	-0.26	65.84
155	0.9	LIVE	1.574E-02	-0.29	132.12
155	0.	SX	0.46	1.13	772.07
155	0.45	SX	0.46	0.27	357.5
155	0.9	SX	0.46	1.6	57.22
155	0.	SY	0.24	1.52	295.14
155	0.45	SY	0.24	0.99	140.04
155	0.9	SY	0.24	3.37	20.55
155	0.	WB	-2.719E-03	1.433E-03	-4.16
155	0.45	WB	-2.719E-03	2.014E-05	-3.11
155	0.9	WB	-2.719E-03	-1.393E-03	-2.05
156	0.	DEAD	-9.620E-02	0.17	182.72
156	0.45	DEAD	-9.620E-02	-7.246E-02	53.07
156	0.9	DEAD	-9.620E-02	-0.31	-88.13
156	0.	LIVE	-0.11	0.16	132.11
156	0.45	LIVE	-0.11	-3.578E-02	27.66
156	0.9	LIVE	-0.11	-0.23	-76.78
156	0.	SX	0.39	1.49	57.09
156	0.45	SX	0.39	0.46	475.7
156	0.9	SX	0.39	0.84	894.45
156	0.	SY	0.13	3.11	20.5
156	0.45	SY	0.13	1.94	175.57
156	0.9	SY	0.13	1.34	335.22
156	0.	WB	-4.195E-03	1.374E-03	-2.06
156	0.45	WB	-4.195E-03	2.312E-03	-0.92
156	0.9	WB	-4.195E-03	3.249E-03	0.22
157	0.	DEAD	-1.09	-0.36	-88.15
157	0.4325	DEAD	-1.09	0.1	-397.19
157	0.865	DEAD	-1.09	0.56	-716.9
157	0.	LIVE	-0.96	-0.25	-76.8
157	0.4325	LIVE	-0.96	4.179E-02	-330.27
157	0.865	LIVE	-0.96	0.34	-583.73
157	0.	SX	0.38	2.6	894.43
157	0.4325	SX	0.38	0.46	1319.82
157	0.865	SX	0.38	3.11	1745.25
157	0.	SY	0.59	3.34	335.22
157	0.4325	SY	0.59	2.55	498.44
157	0.865	SY	0.59	7.65	662.14
157	0.	WB	-9.344E-03	3.197E-03	0.21
157	0.4325	WB	-9.344E-03	-4.193E-03	1.61
157	0.865	WB	-9.344E-03	-1.158E-02	3.
158	0.	DEAD	1.6	0.41	-1947.23
158	0.46751	DEAD	1.6	0.1	-1087.42

Table 30: Element Forces - Frames, Part 2 of 2

Frame	Station	OutputCase	T	M2	M3
	m		Kgf-m	Kgf-m	Kgf-m
158	0.93501	DEAD	1.6	-0.2	-240.09
158	0.	LIVE	1.43	0.3	-1666.49
158	0.46751	LIVE	1.43	6.253E-02	-921.19
158	0.93501	LIVE	1.43	-0.18	-175.88
158	0.	SX	0.77	1.1	1128.04
158	0.46751	SX	0.77	1.75	942.27
158	0.93501	SX	0.77	4.42	756.63
158	0.	SY	0.64	1.83	486.92
158	0.46751	SY	0.64	1.89	394.83
158	0.93501	SY	0.64	4.52	303.79
158	0.	WB	8.973E-03	-3.258E-03	3.
158	0.46751	WB	8.973E-03	-1.927E-03	2.66
158	0.93501	WB	8.973E-03	-5.964E-04	2.32
159	0.	DEAD	4.471E-02	-0.14	-240.03
159	0.45	DEAD	4.471E-02	-0.12	321.19
159	0.90001	DEAD	4.471E-02	-0.1	870.85
159	0.	LIVE	0.2	-2.284E-02	-175.81
159	0.45	LIVE	0.2	-6.003E-02	289.9
159	0.90001	LIVE	0.2	-9.721E-02	755.61
159	0.	SX	0.11	2.01	756.53
159	0.45	SX	0.11	0.79	591.25
159	0.90001	SX	0.11	0.79	426.14
159	0.	SY	0.17	4.42	303.76
159	0.45	SY	0.17	2.72	219.33
159	0.90001	SY	0.17	1.42	140.86
159	0.	WB	8.725E-03	1.004E-02	2.32
159	0.45	WB	8.725E-03	4.698E-03	0.65
159	0.90001	WB	8.725E-03	-6.477E-04	-1.02
160	0.	DEAD	-0.17	0.15	870.77
160	0.45	DEAD	-0.17	0.12	1140.7
160	0.90001	DEAD	-0.17	8.359E-02	1399.08
160	0.	LIVE	-0.11	0.13	755.55
160	0.45	LIVE	-0.11	0.1	982.89
160	0.90001	LIVE	-0.11	7.061E-02	1210.23
160	0.	SX	3.722E-02	2.15	426.36
160	0.45	SX	3.722E-02	0.43	262.56
160	0.90001	SX	3.722E-02	1.37	99.09
160	0.	SY	2.315E-02	2.99	140.93
160	0.45	SY	2.315E-02	0.53	82.42
160	0.90001	SY	2.315E-02	2.85	47.1
160	0.	WB	-3.955E-04	2.180E-03	-1.02
160	0.45	WB	-3.955E-04	5.352E-04	-1.1
160	0.90001	WB	-3.955E-04	-1.110E-03	-1.18
161	0.	DEAD	-0.46	-0.2	1399.04
161	0.45001	DEAD	-0.46	-0.17	1263.61
161	0.90001	DEAD	-0.46	-0.13	1116.64
161	0.	LIVE	-0.41	-0.18	1210.19
161	0.45001	LIVE	-0.41	-0.15	1088.09
161	0.90001	LIVE	-0.41	-0.13	965.99
161	0.	SX	0.16	0.73	99.17
161	0.45001	SX	0.16	0.13	129.03
161	0.90001	SX	0.16	0.95	355.94
161	0.	SY	5.185E-02	1.39	47.08
161	0.45001	SY	5.185E-02	0.27	80.91

Table 30: Element Forces - Frames, Part 2 of 2

Frame	Station	OutputCase	T	M2	M3
	m		Kgf-m	Kgf-m	Kgf-m
161	0.90001	SY	5.185E-02	1.62	153.44
161	0.	WB	-9.452E-04	-1.340E-03	-1.18
161	0.45001	WB	-9.452E-04	-1.175E-03	-0.86
161	0.90001	WB	-9.452E-04	-1.011E-03	-0.55
162	0.	DEAD	-0.7	5.255E-02	1116.59
162	0.45	DEAD	-0.7	0.24	500.87
162	0.90001	DEAD	-0.7	0.43	-126.4
162	0.	LIVE	-0.65	5.597E-02	965.94
162	0.45	LIVE	-0.65	0.22	429.44
162	0.90001	LIVE	-0.65	0.38	-107.06
162	0.	SX	0.15	0.86	355.89
162	0.45	SX	0.15	5.479E-02	690.57
162	0.90001	SX	0.15	0.79	1025.3
162	0.	SY	0.12	1.5	153.41
162	0.45	SY	0.12	0.2	266.85
162	0.90001	SY	0.12	1.54	382.41
162	0.	WB	-9.191E-04	1.023E-03	-0.54
162	0.45	WB	-9.191E-04	1.012E-03	-0.17
162	0.90001	WB	-9.191E-04	1.002E-03	0.21
163	0.	DEAD	-0.84	-0.42	-126.72
163	0.41433	DEAD	-0.84	-0.29	-1209.57
163	0.82866	DEAD	-0.84	-0.16	-2302.23
163	0.	LIVE	-0.78	-0.36	-107.34
163	0.41433	LIVE	-0.78	-0.26	-1047.54
163	0.82866	LIVE	-0.78	-0.15	-1987.73
163	0.	SX	0.53	0.6	1025.44
163	0.41433	SX	0.53	7.609E-02	1471.82
163	0.82866	SX	0.53	0.73	1918.21
163	0.	SY	0.89	1.09	382.47
163	0.41433	SY	0.89	0.24	536.67
163	0.82866	SY	0.89	1.47	691.28
163	0.	WB	-8.848E-04	-1.835E-03	0.21
163	0.41433	WB	-8.848E-04	-1.623E-03	0.59
163	0.82866	WB	-8.848E-04	-1.410E-03	0.97
164	0.	DEAD	1.31	-0.15	-546.82
164	0.4675	DEAD	1.31	-0.42	-185.45
164	0.935	DEAD	1.31	-0.7	163.45
164	0.	LIVE	1.07	-0.19	-463.18
164	0.4675	LIVE	1.07	-0.4	-165.41
164	0.935	LIVE	1.07	-0.6	132.36
164	0.	SX	0.51	2.15	2051.8
164	0.4675	SX	0.51	1.96	1531.28
164	0.935	SX	0.51	1.8	1010.8
164	0.	SY	2.47	2.19	1544.01
164	0.4675	SY	2.47	2.55	1126.51
164	0.935	SY	2.47	2.93	709.51
164	0.	WB	-3.118E-04	-8.241E-03	-1.61
164	0.4675	WB	-3.118E-04	-7.164E-03	-1.16
164	0.935	WB	-3.118E-04	-6.086E-03	-0.7
165	0.	DEAD	0.38	0.45	163.69
165	0.45	DEAD	0.38	0.4	298.89
165	0.9	DEAD	0.38	0.35	422.52
165	0.	LIVE	0.33	0.44	132.57
165	0.45	LIVE	0.33	0.39	242.69

Table 30: Element Forces - Frames, Part 2 of 2

Frame	Station	OutputCase	T	M2	M3
	m		Kgf-m	Kgf-m	Kgf-m
165	0.9	LIVE	0.33	0.35	352.81
165	0.	SX	0.47	2.05	1010.82
165	0.45	SX	0.47	2.	540.44
165	0.9	SX	0.47	1.97	70.18
165	0.	SY	0.61	3.54	709.67
165	0.45	SY	0.61	2.78	369.94
165	0.9	SY	0.61	2.04	33.09
165	0.	WB	3.695E-04	8.470E-03	-0.7
165	0.45	WB	3.695E-04	8.285E-03	-0.33
165	0.9	WB	3.695E-04	8.100E-03	4.858E-02
166	0.	DEAD	-0.32	-0.46	422.53
166	0.45	DEAD	-0.32	-0.48	336.79
166	0.9	DEAD	-0.32	-0.5	239.5
166	0.	LIVE	-0.26	-0.44	352.82
166	0.45	LIVE	-0.26	-0.44	280.39
166	0.9	LIVE	-0.26	-0.45	207.96
166	0.	SX	0.47	1.91	70.32
166	0.45	SX	0.47	2.01	399.38
166	0.9	SX	0.47	2.15	868.91
166	0.	SY	0.21	1.9	33.18
166	0.45	SY	0.21	2.97	312.3
166	0.9	SY	0.21	4.07	653.89
166	0.	WB	8.677E-04	-8.074E-03	4.881E-02
166	0.45	WB	8.677E-04	-7.188E-03	0.38
166	0.9	WB	8.677E-04	-6.302E-03	0.7
167	0.	DEAD	-1.24	0.14	239.27
167	0.35717	DEAD	-1.24	0.28	-4.67
167	0.71435	DEAD	-1.24	0.42	-255.88
167	1.07152	DEAD	-1.24	0.56	-514.38
167	0.	LIVE	-1.01	0.17	207.77
167	0.35717	LIVE	-1.01	0.27	1.43
167	0.71435	LIVE	-1.01	0.38	-204.91
167	1.07152	LIVE	-1.01	0.48	-411.24
167	0.	SX	0.65	1.76	868.87
167	0.35717	SX	0.65	1.77	1260.65
167	0.71435	SX	0.65	1.78	1652.44
167	1.07152	SX	0.65	1.79	2044.23
167	0.	SY	2.24	2.8	654.01
167	0.35717	SY	2.24	2.54	920.82
167	0.71435	SY	2.24	2.3	1187.87
167	1.07152	SY	2.24	2.06	1455.03
167	0.	WB	1.057E-03	5.811E-03	0.7
167	0.35717	WB	1.057E-03	5.425E-03	0.93
167	0.71435	WB	1.057E-03	5.040E-03	1.15
167	1.07152	WB	1.057E-03	4.655E-03	1.37
170	0.	DEAD	-1.31	-0.87	-673.34
170	0.4675	DEAD	-1.31	-0.55	-241.8
170	0.935	DEAD	-1.31	-0.22	177.27
170	0.	LIVE	-1.09	-0.81	-586.9
170	0.4675	LIVE	-1.09	-0.55	-221.77
170	0.935	LIVE	-1.09	-0.3	143.36
170	0.	SX	0.78	2.71	2013.2
170	0.4675	SX	0.78	2.83	1508.97
170	0.935	SX	0.78	2.95	1004.76

Table 30: Element Forces - Frames, Part 2 of 2

Frame	Station	OutputCase	T	M2	M3
	m		Kgf-m	Kgf-m	Kgf-m
170	0.	SY	2.83	4.03	639.84
170	0.4675	SY	2.83	4.02	476.29
170	0.935	SY	2.83	4.01	314.86
170	0.	WB	-2.011E-03	-1.360E-02	-2.24
170	0.4675	WB	-2.011E-03	-1.337E-02	-1.7
170	0.935	WB	-2.011E-03	-1.314E-02	-1.16
171	0.	DEAD	3.16	-1.32	177.5
171	0.33238	DEAD	3.16	0.78	326.92
171	0.66477	DEAD	3.16	2.89	470.03
171	0.	LIVE	2.6	-1.62	143.56
171	0.33238	LIVE	2.6	0.83	271.67
171	0.66477	LIVE	2.6	3.27	399.79
171	0.	SX	0.15	8.74	1004.75
171	0.33238	SX	0.15	4.24	661.96
171	0.66477	SX	0.15	17.21	319.18
171	0.	SY	0.22	10.8	314.87
171	0.33238	SY	0.22	5.52	207.44
171	0.66477	SY	0.22	21.83	100.01
171	0.	WB	-7.122E-04	-6.342E-02	-1.16
171	0.33238	WB	-7.122E-04	2.409E-02	-0.78
171	0.66477	WB	-7.122E-04	0.11	-0.41
172	0.	DEAD	-10.16	5.88	470.21
172	0.23523	DEAD	-10.16	-4.92	516.18
172	0.	LIVE	-8.4	6.34	399.94
172	0.23523	LIVE	-8.4	-5.66	441.81
172	0.	SX	1.93	33.24	319.27
172	0.23523	SX	1.93	31.38	75.32
172	0.	SY	2.45	42.89	100.04
172	0.23523	SY	2.45	39.83	23.62
172	0.	WB	4.128E-04	0.19	-0.41
172	0.23523	WB	4.128E-04	-0.2	-0.15
173	0.	DEAD	0.32	-0.55	516.18
173	0.45	DEAD	0.32	-0.55	393.62
173	0.9	DEAD	0.32	-0.55	259.5
173	0.	LIVE	0.26	-0.56	441.81
173	0.45	LIVE	0.26	-0.54	335.72
173	0.9	LIVE	0.26	-0.52	229.64
173	0.	SX	0.5	2.77	75.46
173	0.45	SX	0.5	2.63	389.71
173	0.9	SX	0.5	2.49	854.89
173	0.	SY	0.17	3.5	23.66
173	0.45	SY	0.17	3.4	123.58
173	0.9	SY	0.17	3.3	270.39
173	0.	WB	-7.445E-04	-1.406E-02	-0.15
173	0.45	WB	-7.445E-04	-1.156E-02	0.31
173	0.9	WB	-7.445E-04	-9.054E-03	0.77
174	0.	DEAD	1.56	0.64	259.26
174	0.35717	DEAD	1.56	0.52	-10.6
174	0.71435	DEAD	1.56	0.39	-287.73
174	1.07152	DEAD	1.56	0.26	-572.15
174	0.	LIVE	1.29	0.58	229.44
174	0.35717	LIVE	1.29	0.46	-1.62
174	0.71435	LIVE	1.29	0.34	-232.68
174	1.07152	LIVE	1.29	0.23	-463.75

Table 30: Element Forces - Frames, Part 2 of 2

Frame	Station	OutputCase	T	M2	M3
	m		Kgf-m	Kgf-m	Kgf-m
174	0.	SX	0.29	2.22	854.83
174	0.35717	SX	0.29	1.89	1244.92
174	0.71435	SX	0.29	1.57	1635.01
174	1.07152	SX	0.29	1.25	2025.1
174	0.	SY	1.44	4.14	270.38
174	0.35717	SY	1.44	3.3	392.65
174	0.71435	SY	1.44	2.46	515.02
174	1.07152	SY	1.44	1.62	637.44
174	0.	WB	6.994E-04	7.476E-03	0.77
174	0.35717	WB	6.994E-04	5.626E-03	1.06
174	0.71435	WB	6.994E-04	3.775E-03	1.36
174	1.07152	WB	6.994E-04	1.924E-03	1.65
183	0.	DEAD	0.37	6.429E-02	-1.36
183	0.34577	DEAD	0.37	-4.300E-03	129.41
183	0.69154	DEAD	0.37	-7.289E-02	255.13
183	0.	LIVE	0.6	3.914E-02	-1.63
183	0.34577	LIVE	0.6	-1.228E-02	173.95
183	0.69154	LIVE	0.6	-6.369E-02	349.54
183	0.	SX	0.17	0.76	1.39
183	0.34577	SX	0.17	0.3	2.69
183	0.69154	SX	0.17	0.2	5.54
183	0.	SY	0.27	1.05	0.78
183	0.34577	SY	0.27	0.34	15.65
183	0.69154	SY	0.27	0.38	31.95
183	0.	WB	2.487E-02	-1.814E-03	-4.685E-02
183	0.34577	WB	2.487E-02	-1.093E-03	6.54
183	0.69154	WB	2.487E-02	-3.731E-04	13.12
184	0.	DEAD	-0.26	0.12	255.02
184	0.43988	DEAD	-0.26	5.314E-02	176.01
184	0.87976	DEAD	-0.26	-1.675E-02	88.84
184	0.	LIVE	-0.45	0.13	349.4
184	0.43988	LIVE	-0.45	5.641E-02	209.17
184	0.87976	LIVE	-0.45	-2.187E-02	68.94
184	0.	SX	9.006E-02	0.29	5.51
184	0.43988	SX	9.006E-02	0.35	38.8
184	0.87976	SX	9.006E-02	0.93	78.66
184	0.	SY	4.054E-02	0.73	31.83
184	0.43988	SY	4.054E-02	0.45	12.34
184	0.87976	SY	4.054E-02	1.6	42.17
184	0.	WB	-2.127E-02	3.764E-03	13.11
184	0.43988	WB	-2.127E-02	1.729E-03	6.71
184	0.87976	WB	-2.127E-02	-3.054E-04	0.3
185	0.	DEAD	-4.995E-02	-8.182E-02	88.89
185	0.359	DEAD	-4.995E-02	-7.254E-02	33.41
185	0.718	DEAD	-4.995E-02	-6.327E-02	-27.5
185	1.077	DEAD	-4.995E-02	-5.399E-02	-93.86
185	0.	LIVE	-5.736E-02	-6.686E-02	69.09
185	0.359	LIVE	-5.736E-02	-6.083E-02	-7.5
185	0.718	LIVE	-5.736E-02	-5.481E-02	-84.09
185	1.077	LIVE	-5.736E-02	-4.878E-02	-160.68
185	0.	SX	4.163E-02	0.23	78.37
185	0.359	SX	4.163E-02	0.29	36.15
185	0.718	SX	4.163E-02	0.36	8.75
185	1.077	SX	4.163E-02	0.43	49.51

Table 30: Element Forces - Frames, Part 2 of 2

Frame	Station	OutputCase	T	M2	M3
	m		Kgf-m	Kgf-m	Kgf-m
185	0.	SY	4.713E-02	0.27	42.07
185	0.359	SY	4.713E-02	0.38	35.23
185	0.718	SY	4.713E-02	0.5	32.74
185	1.077	SY	4.713E-02	0.61	35.54
185	0.	WB	-1.602E-03	-1.572E-04	0.31
185	0.359	WB	-1.602E-03	-3.482E-04	-2.31
185	0.718	WB	-1.602E-03	-5.393E-04	-4.92
185	1.077	WB	-1.602E-03	-7.304E-04	-7.54
186	0.	DEAD	0.95	7.228E-02	-94.28
186	0.38571	DEAD	0.95	6.149E-02	102.75
186	0.77141	DEAD	0.95	5.070E-02	293.49
186	0.	LIVE	1.38	7.937E-02	-161.23
186	0.38571	LIVE	1.38	5.842E-02	124.06
186	0.77141	LIVE	1.38	3.747E-02	409.34
186	0.	SX	0.15	0.46	49.62
186	0.38571	SX	0.15	0.29	18.66
186	0.77141	SX	0.15	1.	13.84
186	0.	SY	5.505E-02	1.29	35.52
186	0.38571	SY	5.505E-02	0.56	27.32
186	0.77141	SY	5.505E-02	2.36	21.89
186	0.	WB	5.515E-02	2.074E-03	-7.56
186	0.38571	WB	5.515E-02	1.153E-03	3.99
186	0.77141	WB	5.515E-02	2.317E-04	15.54
187	0.	DEAD	3.559E-02	-2.507E-02	293.26
187	0.45	DEAD	3.559E-02	-9.169E-03	249.48
187	0.9	DEAD	3.559E-02	6.732E-03	197.15
187	0.	LIVE	5.507E-02	-9.994E-03	408.99
187	0.45	LIVE	5.507E-02	1.891E-04	344.31
187	0.9	LIVE	5.507E-02	1.037E-02	279.62
187	0.	SX	3.782E-02	0.57	13.83
187	0.45	SX	3.782E-02	0.42	17.12
187	0.9	SX	3.782E-02	0.27	20.81
187	0.	SY	1.961E-02	1.34	21.89
187	0.45	SY	1.961E-02	0.89	12.53
187	0.9	SY	1.961E-02	0.44	6.85
187	0.	WB	2.842E-03	8.389E-04	15.52
187	0.45	WB	2.842E-03	5.372E-04	13.13
187	0.9	WB	2.842E-03	2.356E-04	10.73
188	0.	DEAD	-1.16	6.662E-02	197.26
188	0.35528	DEAD	-1.16	-4.214E-03	-66.57
188	0.71055	DEAD	-1.16	-7.505E-02	-335.73
188	0.	LIVE	-1.65	7.295E-02	279.77
188	0.35528	LIVE	-1.65	-1.900E-02	-98.68
188	0.71055	LIVE	-1.65	-0.11	-477.13
188	0.	SX	3.497E-02	0.23	20.84
188	0.35528	SX	3.497E-02	1.01	43.2
188	0.71055	SX	3.497E-02	1.85	65.58
188	0.	SY	3.861E-02	0.59	6.86
188	0.35528	SY	3.861E-02	1.6	14.
188	0.71055	SY	3.861E-02	2.81	21.75
188	0.	WB	-6.481E-02	1.968E-03	10.74
188	0.35528	WB	-6.481E-02	-6.713E-04	-4.23
188	0.71055	WB	-6.481E-02	-3.310E-03	-19.2
189	0.	DEAD	-5.657E-02	-3.962E-02	-335.44

Table 30: Element Forces - Frames, Part 2 of 2

Frame	Station	OutputCase	T	M2	M3
	m		Kgf-m	Kgf-m	Kgf-m
189	0.359	DEAD	-5.657E-02	-1.674E-02	-451.52
189	0.718	DEAD	-5.657E-02	6.131E-03	-573.03
189	1.077	DEAD	-5.657E-02	2.900E-02	-699.99
189	0.	LIVE	-8.460E-02	-4.492E-02	-476.75
189	0.359	LIVE	-8.460E-02	-1.459E-02	-656.52
189	0.718	LIVE	-8.460E-02	1.573E-02	-836.29
189	1.077	LIVE	-8.460E-02	4.605E-02	-1016.07
189	0.	SX	6.675E-02	0.36	65.54
189	0.359	SX	6.675E-02	0.53	75.17
189	0.718	SX	6.675E-02	0.7	84.85
189	1.077	SX	6.675E-02	0.87	94.58
189	0.	SY	3.107E-02	0.68	21.73
189	0.359	SY	3.107E-02	0.71	23.78
189	0.718	SY	3.107E-02	0.76	29.08
189	1.077	SY	3.107E-02	0.82	36.23
189	0.	WB	-3.172E-03	-1.756E-03	-19.18
189	0.359	WB	-3.172E-03	-8.127E-04	-26.52
189	0.718	WB	-3.172E-03	1.307E-04	-33.85
189	1.077	WB	-3.172E-03	1.074E-03	-41.18
190	0.	DEAD	1.83	-3.334E-03	-700.65
190	0.36438	DEAD	1.83	-1.435E-02	-222.75
190	0.72876	DEAD	1.83	-2.538E-02	249.54
190	0.	LIVE	2.63	8.049E-03	-1017.04
190	0.36438	LIVE	2.63	-1.282E-02	-341.39
190	0.72876	LIVE	2.63	-3.369E-02	334.26
190	0.	SX	0.25	0.51	94.87
190	0.36438	SX	0.25	0.37	47.43
190	0.72876	SX	0.25	1.11	1.39
190	0.	SY	9.607E-02	1.58	36.33
190	0.36438	SY	9.607E-02	0.22	18.05
190	0.72876	SY	9.607E-02	1.93	2.19
190	0.	WB	0.11	1.058E-03	-41.22
190	0.36438	WB	0.11	5.699E-04	-13.96
190	0.72876	WB	0.11	8.191E-05	13.3
191	0.	DEAD	0.55	2.633E-02	248.83
191	0.4675	DEAD	0.55	5.068E-02	506.06
191	0.935	DEAD	0.55	7.503E-02	754.06
191	0.	LIVE	0.89	3.239E-02	333.17
191	0.4675	LIVE	0.89	5.355E-02	718.39
191	0.935	LIVE	0.89	7.471E-02	1103.6
191	0.	SX	0.14	0.6	1.4
191	0.4675	SX	0.14	0.31	37.58
191	0.935	SX	0.14	7.345E-02	75.29
191	0.	SY	5.304E-02	1.06	2.18
191	0.4675	SY	5.304E-02	0.43	13.5
191	0.935	SY	5.304E-02	0.25	26.42
191	0.	WB	3.707E-02	2.761E-04	13.25
191	0.4675	WB	3.707E-02	7.597E-04	28.89
191	0.935	WB	3.707E-02	1.243E-03	44.53
192	0.	DEAD	-0.13	-2.470E-02	753.93
192	0.45	DEAD	-0.13	-5.635E-02	771.21
192	0.9	DEAD	-0.13	-8.801E-02	779.94
192	0.	LIVE	-0.14	-2.960E-02	1103.36
192	0.45	LIVE	-0.14	-5.740E-02	1132.81

Table 30: Element Forces - Frames, Part 2 of 2

Frame	Station	OutputCase	T	M2	M3
	m		Kgf-m	Kgf-m	Kgf-m
192	0.9	LIVE	-0.14	-8.520E-02	1162.26
192	0.	SX	4.772E-02	0.27	75.26
192	0.45	SX	4.772E-02	0.57	91.44
192	0.9	SX	4.772E-02	1.	107.65
192	0.	SY	3.051E-02	0.31	26.42
192	0.45	SY	3.051E-02	0.85	31.29
192	0.9	SY	3.051E-02	1.98	36.36
192	0.	WB	-4.468E-03	-4.603E-04	44.52
192	0.45	WB	-4.468E-03	-2.734E-04	45.94
192	0.9	WB	-4.468E-03	-8.646E-05	47.35
193	0.	DEAD	-0.67	5.786E-02	780.2
193	0.45	DEAD	-0.67	0.11	569.64
193	0.9	DEAD	-0.67	0.16	350.53
193	0.	LIVE	-0.97	6.176E-02	1162.62
193	0.45	LIVE	-0.97	0.11	860.25
193	0.9	LIVE	-0.97	0.15	557.88
193	0.	SX	0.1	0.67	107.71
193	0.45	SX	0.1	0.47	125.86
193	0.9	SX	0.1	0.3	144.07
193	0.	SY	4.137E-02	1.3	36.38
193	0.45	SY	4.137E-02	0.79	42.88
193	0.9	SY	4.137E-02	0.32	49.83
193	0.	WB	-3.839E-02	8.280E-04	47.36
193	0.45	WB	-3.839E-02	1.416E-03	35.55
193	0.9	WB	-3.839E-02	2.005E-03	23.74
194	0.	DEAD	-1.	-1.062E-02	351.02
194	0.37027	DEAD	-1.	-5.209E-02	-77.55
194	0.74055	DEAD	-1.	-9.357E-02	-511.91
194	1.11082	DEAD	-1.	-0.14	-952.06
194	0.	LIVE	-1.61	-1.327E-02	558.61
194	0.37027	LIVE	-1.61	-5.477E-02	-70.1
194	0.74055	LIVE	-1.61	-9.628E-02	-698.81
194	1.11082	LIVE	-1.61	-0.14	-1327.53
194	0.	SX	0.34	0.54	144.13
194	0.37027	SX	0.34	0.78	183.59
194	0.74055	SX	0.34	1.06	223.16
194	1.11082	SX	0.34	1.37	262.78
194	0.	SY	0.16	0.31	49.86
194	0.37027	SY	0.16	0.98	61.87
194	0.74055	SY	0.16	1.72	74.74
194	1.11082	SY	0.16	2.46	88.11
194	0.	WB	-6.947E-02	2.110E-04	23.77
194	0.37027	WB	-6.947E-02	-4.401E-04	-1.16
194	0.74055	WB	-6.947E-02	-1.091E-03	-26.1
194	1.11082	WB	-6.947E-02	-1.742E-03	-51.03
195	0.	DEAD	7.281E-02	0.32	-949.65
195	0.37962	DEAD	7.281E-02	1.669E-02	-946.3
195	0.75923	DEAD	7.281E-02	-0.28	-949.04
195	0.	LIVE	0.27	0.25	-1323.78
195	0.37962	LIVE	0.27	3.452E-02	-1317.97
195	0.75923	LIVE	0.27	-0.18	-1312.17
195	0.	SX	0.25	3.62	263.16
195	0.37962	SX	0.25	1.37	1079.25
195	0.75923	SX	0.25	2.35	1895.36

Table 30: Element Forces - Frames, Part 2 of 2

Frame	Station	OutputCase	T	M2	M3
	m		Kgf-m	Kgf-m	Kgf-m
195	0.	SY	0.22	7.71	88.37
195	0.37962	SY	0.22	0.77	359.2
195	0.75923	SY	0.22	7.58	630.18
195	0.	WB	1.724E-02	-4.376E-03	-50.88
195	0.37962	WB	1.724E-02	1.633E-03	-48.82
195	0.75923	WB	1.724E-02	7.643E-03	-46.77
196	0.	DEAD	277.22	11.59	318.27
196	0.28438	DEAD	277.22	2.62	848.55
196	0.56876	DEAD	277.22	-6.36	1262.23
196	0.56876	DEAD	277.18	-9.51	1262.24
196	0.83194	DEAD	277.18	-9.2	1525.35
196	1.09512	DEAD	277.18	-8.89	1688.61
196	1.09512	DEAD	486.91	-8.87	1688.59
196	1.46026	DEAD	486.91	-9.42	1679.61
196	1.8254	DEAD	486.91	-9.98	1478.42
196	2.19054	DEAD	486.91	-10.53	1085.02
196	0.	LIVE	541.15	9.62	412.51
196	0.28438	LIVE	541.15	4.22	457.36
196	0.56876	LIVE	541.15	-1.17	502.21
196	0.56876	LIVE	541.13	-5.04	502.23
196	0.83194	LIVE	541.13	-5.2	515.26
196	1.09512	LIVE	541.13	-5.35	528.29
196	1.09512	LIVE	721.17	-5.32	528.25
196	1.46026	LIVE	721.17	-6.2	496.49
196	1.8254	LIVE	721.17	-7.08	464.73
196	2.19054	LIVE	721.17	-7.96	432.97
196	0.	SX	685.89	526.35	4271.39
196	0.28438	SX	685.89	82.49	3454.02
196	0.56876	SX	685.89	533.43	2658.84
196	0.56876	SX	685.81	522.8	2658.85
196	0.83194	SX	685.81	509.52	1966.26
196	1.09512	SX	685.81	498.	1381.27
196	1.09512	SX	1121.81	497.42	1381.2
196	1.46026	SX	1121.81	450.75	1079.07
196	1.8254	SX	1121.81	407.08	1751.82
196	2.19054	SX	1121.81	367.45	2760.65
196	0.	SY	1792.54	303.15	4551.5
196	0.28438	SY	1792.54	464.6	3379.95
196	0.56876	SY	1792.54	887.82	2221.48
196	0.56876	SY	1792.56	866.41	2221.47
196	0.83194	SY	1792.56	702.61	1194.52
196	1.09512	SY	1792.56	544.24	565.33
196	1.09512	SY	1730.64	544.59	565.37
196	1.46026	SY	1730.64	362.99	1662.43
196	1.8254	SY	1730.64	258.81	3144.43
196	2.19054	SY	1730.64	319.77	4657.35
196	0.	WB	26.27	0.22	7.1
196	0.28438	WB	26.27	0.11	7.58
196	0.56876	WB	26.27	-3.213E-03	8.06
196	0.56876	WB	26.27	-0.11	8.06
196	0.83194	WB	26.27	-0.11	7.37
196	1.09512	WB	26.27	-0.11	6.67
196	1.09512	WB	27.88	-0.11	6.67
196	1.46026	WB	27.88	-0.11	5.55

Table 30: Element Forces - Frames, Part 2 of 2

Frame	Station	OutputCase	T	M2	M3
	m		Kgf-m	Kgf-m	Kgf-m
196	1.8254	WB	27.88	-0.11	4.42
196	2.19054	WB	27.88	-0.12	3.3
197	0.	DEAD	200.51	-11.94	1085.48
197	0.44808	DEAD	200.51	9.59	-117.87
197	0.	LIVE	8.92	-8.35	433.19
197	0.44808	LIVE	8.92	6.37	-35.46
197	0.	SX	3620.47	318.48	2760.82
197	0.44808	SX	3620.47	214.77	3750.94
197	0.	SY	1815.15	388.93	4657.59
197	0.44808	SY	1815.15	809.93	6477.45
197	0.	WB	-14.69	7.862E-03	3.29
197	0.44808	WB	-14.69	-2.978E-02	-0.5
208	0.	DEAD	3.123E-02	302.01	-357.33
208	2.2	DEAD	3.123E-02	13.29	-14.24
208	4.4	DEAD	3.123E-02	-275.42	328.85
208	0.	LIVE	2.915E-02	215.25	-295.11
208	2.2	LIVE	2.915E-02	10.2	-8.06
208	4.4	LIVE	2.915E-02	-194.86	279.
208	0.	SX	0.63	182.73	232.22
208	2.2	SX	0.63	48.92	421.45
208	4.4	SX	0.63	261.5	1033.23
208	0.	SY	1.82	746.21	220.85
208	2.2	SY	1.82	274.81	351.83
208	4.4	SY	1.82	1288.54	664.59
208	0.	WB	7.017E-04	-1.51	-0.18
208	2.2	WB	7.017E-04	-2.364E-02	0.33
208	4.4	WB	7.017E-04	1.46	0.85
209	0.	DEAD	3.157E-02	-360.91	-452.41
209	2.2	DEAD	3.157E-02	-14.54	-13.48
209	4.4	DEAD	3.157E-02	331.83	425.46
209	0.	LIVE	3.206E-02	-289.01	-387.42
209	2.2	LIVE	3.206E-02	-10.89	-6.45
209	4.4	LIVE	3.206E-02	267.23	374.52
209	0.	SX	0.64	169.19	198.61
209	2.2	SX	0.64	50.03	422.18
209	4.4	SX	0.64	254.67	1003.89
209	0.	SY	1.81	729.62	70.24
209	2.2	SY	1.81	278.79	133.53
209	4.4	SY	1.81	1279.76	319.38
209	0.	WB	9.014E-04	-1.42	-1.5
209	2.2	WB	9.014E-04	3.969E-02	1.55
209	4.4	WB	9.014E-04	1.5	4.6
210	0.	DEAD	2.567E-02	279.26	330.16
210	2.2	DEAD	2.567E-02	0.22	17.94
210	4.4	DEAD	2.567E-02	-278.83	-294.28
210	0.	LIVE	2.444E-02	221.54	271.89
210	2.2	LIVE	2.444E-02	-0.35	17.47
210	4.4	LIVE	2.444E-02	-222.24	-236.95
210	0.	SX	0.63	170.53	230.69
210	2.2	SX	0.63	43.	422.17
210	4.4	SX	0.63	228.76	1030.39
210	0.	SY	1.83	525.63	264.31
210	2.2	SY	1.83	249.68	364.59
210	4.4	SY	1.83	1005.46	641.38

Table 30: Element Forces - Frames, Part 2 of 2

Frame	Station	OutputCase	T	M2	M3
	m		Kgf-m	Kgf-m	Kgf-m
1073	0.	LIVE	-2.711E-02	5.355E-02	49.29
1073	0.41096	LIVE	-2.711E-02	-2.715E-02	24.42
1073	0.82192	LIVE	-2.711E-02	-0.11	-0.45
1073	0.	SX	0.11	0.53	127.7
1073	0.41096	SX	0.11	0.12	64.6
1073	0.82192	SX	0.11	0.78	1.53
1073	0.	SY	6.549E-02	0.88	54.18
1073	0.41096	SY	6.549E-02	0.19	27.43
1073	0.82192	SY	6.549E-02	1.26	0.9
1073	0.	WB	-2.347E-05	-1.334E-03	7.755E-02
1073	0.41096	WB	-2.347E-05	1.915E-04	3.975E-02
1073	0.82192	WB	-2.347E-05	1.717E-03	1.950E-03
1074	0.	DEAD	-0.54	-0.71	-39.49
1074	0.46967	DEAD	-0.54	-0.16	21.75
1074	0.93935	DEAD	-0.54	0.39	70.4
1074	0.	LIVE	-0.37	-0.53	11.09
1074	0.46967	LIVE	-0.37	-0.12	26.81
1074	0.93935	LIVE	-0.37	0.28	42.52
1074	0.	SX	1.53	2.08	777.6
1074	0.46967	SX	1.53	0.46	472.81
1074	0.93935	SX	1.53	1.28	179.61
1074	0.	SY	0.65	3.29	1211.95
1074	0.46967	SY	0.65	0.76	758.16
1074	0.93935	SY	0.65	1.99	306.16
1074	0.	WB	1.692E-03	2.634E-03	-0.18
1074	0.46967	WB	1.692E-03	-6.287E-05	-0.12
1074	0.93935	WB	1.692E-03	-2.760E-03	-5.217E-02
1075	0.	DEAD	6.695E-02	0.24	70.39
1075	0.46998	DEAD	6.695E-02	0.3	65.11
1075	0.93997	DEAD	6.695E-02	0.37	47.23
1075	0.	LIVE	7.401E-02	0.18	42.49
1075	0.46998	LIVE	7.401E-02	0.23	29.77
1075	0.93997	LIVE	7.401E-02	0.29	17.05
1075	0.	SX	0.24	0.64	179.64
1075	0.46998	SX	0.24	0.83	118.74
1075	0.93997	SX	0.24	1.36	390.15
1075	0.	SY	0.44	0.96	306.22
1075	0.46998	SY	0.44	1.11	151.03
1075	0.93997	SY	0.44	1.89	601.79
1075	0.	WB	-2.446E-04	-1.043E-03	-5.220E-02
1075	0.46998	WB	-2.446E-04	-1.619E-03	-2.932E-02
1075	0.93997	WB	-2.446E-04	-2.195E-03	-6.449E-03
1076	0.	DEAD	0.56	0.6	47.18
1076	0.46448	DEAD	0.56	-0.17	-23.68
1076	0.92896	DEAD	0.56	-0.94	-106.86
1076	0.	LIVE	0.37	0.47	17.02
1076	0.46448	LIVE	0.37	-0.13	-21.53
1076	0.92896	LIVE	0.37	-0.73	-60.07
1076	0.	SX	1.71	1.77	390.16
1076	0.46448	SX	1.71	0.4	674.05
1076	0.92896	SX	1.71	2.56	963.45
1076	0.	SY	1.12	2.41	601.72
1076	0.46448	SY	1.12	0.56	1096.46
1076	0.92896	SY	1.12	3.53	1592.53

Table 30: Element Forces - Frames, Part 2 of 2

Frame	Station	OutputCase	T	M2	M3
	m		Kgf-m	Kgf-m	Kgf-m
1076	0.	WB	-1.847E-03	-2.665E-03	-6.232E-03
1076	0.46448	WB	-1.847E-03	-3.809E-04	-4.611E-03
1076	0.92896	WB	-1.847E-03	1.903E-03	-2.990E-03

10. Area results

This section provides area results, including items such as forces and stresses.

Table 31: Element Forces - Area Shells, Part 1 of 2

Table 31: Element Forces - Area Shells, Part 1 of 2

Area	AreaElem	Joint	OutputCase	F11	F22	F12
				Kgf/m	Kgf/m	Kgf/m
1	1	304	DEAD	-638.01	-140.93	-186.06
1	1	317	DEAD	550.35	215.58	-29.02
1	1	316	DEAD	528.75	143.57	-28.99
1	1	303	DEAD	-659.61	-212.94	-186.03
1	1	304	LIVE	-978.32	-221.99	-348.99
1	1	317	LIVE	1006.24	373.38	-75.27
1	1	316	LIVE	966.4	240.59	-70.8
1	1	303	LIVE	-1018.16	-354.78	-344.52
1	1	304	SX	161.15	40.57	85.08
1	1	317	SX	252.62	80.44	48.38
1	1	316	SX	244.6	53.63	39.32
1	1	303	SX	168.51	66.78	88.5
1	1	304	SY	678.89	147.07	266.38
1	1	317	SY	825.45	303.98	120.24
1	1	316	SY	793.31	196.31	103.51
1	1	303	SY	711.25	254.5	255.17
1	1	304	WB	-48.73	-11.4	-21.58
1	1	317	WB	60.66	21.41	-5.76
1	1	316	WB	58.2	13.21	-5.15
1	1	303	WB	-51.19	-19.6	-20.97
2	2	303	DEAD	-1058.23	-332.53	-33.45
2	2	316	DEAD	1120.65	321.14	-63.41
2	2	315	DEAD	1120.4	320.29	-39.34
2	2	302	DEAD	-1058.48	-333.38	-9.38
2	2	303	LIVE	-1948.12	-633.77	-80.68
2	2	316	LIVE	2185.14	606.21	-129.1
2	2	315	LIVE	2186.87	611.98	-83.04
2	2	302	LIVE	-1946.39	-628.	-34.62
2	2	303	SX	504.32	170.63	42.18
2	2	316	SX	657.44	177.18	52.38
2	2	315	SX	657.68	177.85	52.56
2	2	302	SX	504.19	170.	35.43
2	2	303	SY	1560.55	510.33	88.91
2	2	316	SY	1839.82	509.68	103.52
2	2	315	SY	1841.91	516.67	76.8
2	2	302	SY	1558.39	503.22	61.78
2	2	303	WB	-116.53	-39.21	-5.35
2	2	316	WB	137.15	36.9	-8.02

Table 31: Element Forces - Area Shells, Part 1 of 2

Area	AreaElem	Joint	OutputCase	F11	F22	F12
				Kgf/m	Kgf/m	Kgf/m
2	2	315	WB	137.45	37.91	-5.11
2	2	302	WB	-116.23	-38.2	-2.44
3	3	302	DEAD	-1094.79	-344.27	-6.13
3	3	315	DEAD	1231.68	353.67	-15.87
3	3	314	DEAD	1231.34	352.54	0.11
3	3	301	DEAD	-1095.13	-345.41	9.85
3	3	302	LIVE	-2121.64	-680.58	-11.37
3	3	315	LIVE	2455.8	692.66	-33.82
3	3	314	LIVE	2455.85	692.81	2.46
3	3	301	LIVE	-2121.6	-680.43	24.92
3	3	302	SX	723.83	236.52	45.33
3	3	315	SX	868.59	241.45	33.91
3	3	314	SX	871.08	249.72	21.56
3	3	301	SX	721.37	228.28	45.21
3	3	302	SY	1737.14	557.93	56.13
3	3	315	SY	2074.15	585.46	57.03
3	3	314	SY	2075.29	589.27	42.87
3	3	301	SY	1736.	554.12	65.71
3	3	302	WB	-131.05	-42.64	-0.59
3	3	315	WB	155.44	43.3	-2.23
3	3	314	WB	155.48	43.45	1.030E-02
3	3	301	WB	-131.01	-42.49	1.65
4	4	314	DEAD	1154.23	329.4	44.01
4	4	313	DEAD	1153.23	326.06	71.91
4	4	300	DEAD	-1071.02	-341.22	19.23
4	4	301	DEAD	-1070.02	-337.87	-8.67
4	4	314	LIVE	2243.55	629.12	100.4
4	4	313	LIVE	2239.03	614.03	152.22
4	4	300	LIVE	-1981.39	-652.1	50.07
4	4	301	LIVE	-1976.86	-637.01	-1.76
4	4	314	SX	893.29	256.09	63.26
4	4	313	SX	889.45	243.38	80.1
4	4	300	SX	791.68	260.56	8.81
4	4	301	SX	787.93	247.89	23.08
4	4	314	SY	1878.84	530.77	108.83
4	4	313	SY	1871.77	507.21	145.33
4	4	300	SY	1579.48	528.15	44.33
4	4	301	SY	1572.36	504.44	46.3
4	4	314	WB	141.64	39.3	6.42
4	4	313	WB	141.09	37.48	9.71
4	4	300	WB	-119.85	-40.8	3.01
4	4	301	WB	-119.3	-38.98	-0.27
5	5	300	DEAD	-685.41	-225.53	219.33
5	5	313	DEAD	555.62	146.78	5.1
5	5	312	DEAD	579.79	227.32	3.11
5	5	296	DEAD	-661.25	-144.99	217.34
5	5	300	LIVE	-1051.26	-373.06	414.44
5	5	313	LIVE	1005.9	244.09	16.47
5	5	312	LIVE	1049.93	390.86	15.36
5	5	296	LIVE	-1007.23	-226.29	413.33
5	5	300	SX	411.64	145.58	201.97
5	5	313	SX	411.41	100.04	34.62
5	5	312	SX	432.32	169.86	45.03
5	5	296	SX	390.94	75.99	200.73

Table 31: Element Forces - Area Shells, Part 1 of 2

Area	AreaElem	Joint	OutputCase	F11	F22	F12
				Kgf/m	Kgf/m	Kgf/m
5	5	300	SY	704.69	264.96	365.19
5	5	313	SY	806.54	187.89	29.62
5	5	312	SY	843.66	312.14	41.33
5	5	296	SY	667.37	141.01	365.84
5	5	300	WB	-53.03	-20.76	25.95
5	5	313	WB	60.85	13.41	1.31
5	5	312	WB	63.6	22.56	1.56
5	5	296	WB	-50.29	-11.61	26.2
6	6	184	DEAD	-3.13	-90.99	55.93
6	6	185	DEAD	26.02	6.18	52.37
6	6	228	DEAD	-62.76	-20.45	71.33
6	6	161	DEAD	-91.91	-117.62	74.89
6	6	184	LIVE	-24.32	-132.78	70.64
6	6	185	LIVE	20.61	16.99	92.36
6	6	228	LIVE	-22.86	3.95	105.09
6	6	161	LIVE	-67.79	-145.82	83.37
6	6	184	SX	46.95	51.65	18.5
6	6	185	SX	32.35	11.1	23.06
6	6	228	SX	71.52	31.27	38.25
6	6	161	SX	57.01	22.36	24.4
6	6	184	SY	27.56	53.92	17.34
6	6	185	SY	17.67	37.67	97.43
6	6	228	SY	45.45	35.66	66.65
6	6	161	SY	36.78	40.	42.86
6	6	184	WB	-2.56	-7.26	2.9
6	6	185	WB	-5.307E-02	1.11	5.48
6	6	228	WB	3.26	2.11	5.33
6	6	161	WB	0.75	-6.26	2.75
7	7	163	DEAD	-93.08	-51.92	-40.48
7	7	209	DEAD	-90.13	-42.08	-25.38
7	7	185	DEAD	21.6	-8.56	3.494E-02
7	7	184	DEAD	18.64	-18.4	-15.07
7	7	163	LIVE	-84.45	-12.53	-12.77
7	7	209	LIVE	-92.95	-40.84	-7.67
7	7	185	LIVE	12.77	-9.13	18.41
7	7	184	LIVE	21.27	19.19	13.31
7	7	163	SX	29.32	22.94	6.39
7	7	209	SX	35.19	14.91	39.15
7	7	185	SX	32.67	7.86	18.37
7	7	184	SX	43.15	39.23	19.5
7	7	163	SY	69.62	48.8	32.26
7	7	209	SY	62.43	19.21	38.77
7	7	185	SY	17.53	31.82	25.47
7	7	184	SY	21.13	47.06	37.
7	7	163	WB	-1.3	2.27	1.8
7	7	209	WB	-2.25	-0.91	1.15
7	7	185	WB	-0.5	-0.38	1.91
7	7	184	WB	0.45	2.79	2.56
8	8	185	DEAD	-31.97	-11.22	49.6
8	8	186	DEAD	-26.96	5.47	12.03
8	8	229	DEAD	-17.37	8.35	29.82
8	8	228	DEAD	-22.37	-8.34	67.4
8	8	185	LIVE	-38.57	-0.77	87.63
8	8	186	LIVE	-29.99	27.82	15.59

Table 31: Element Forces - Area Shells, Part 1 of 2

Area	AreaElem	Joint	OutputCase	F11	F22	F12
				Kgf/m	Kgf/m	Kgf/m
8	8	229	LIVE	24.61	44.2	42.66
8	8	228	LIVE	16.03	15.61	114.7
8	8	185	SX	39.2	9.97	20.81
8	8	186	SX	34.34	36.59	49.32
8	8	229	SX	48.99	51.92	39.06
8	8	228	SX	42.89	23.19	35.56
8	8	185	SY	26.82	30.14	91.44
8	8	186	SY	19.85	128.45	78.18
8	8	229	SY	41.38	131.26	27.83
8	8	228	SY	41.42	36.25	152.87
8	8	185	WB	-1.66	0.63	5.19
8	8	186	WB	-1.1	2.48	0.52
8	8	229	WB	4.49	4.16	1.88
8	8	228	WB	3.94	2.31	6.56
9	9	209	DEAD	-68.64	-35.63	-13.12
9	9	210	DEAD	-61.26	-11.01	3.64
9	9	186	DEAD	-29.	-1.33	14.02
9	9	185	DEAD	-36.39	-25.96	-2.74
9	9	209	LIVE	-80.23	-37.03	-0.63
9	9	210	LIVE	-72.39	-10.89	23.95
9	9	186	LIVE	-38.56	-0.75	38.26
9	9	185	LIVE	-46.4	-26.88	13.68
9	9	209	SX	17.76	6.96	24.53
9	9	210	SX	19.32	6.99	13.58
9	9	186	SX	40.23	6.43	9.02
9	9	185	SX	39.73	7.64	18.36
9	9	209	SY	52.32	16.61	35.56
9	9	210	SY	60.23	15.3	38.06
9	9	186	SY	34.49	6.8	44.83
9	9	185	SY	27.52	23.37	31.71
9	9	209	WB	-2.71	-1.04	1.03
9	9	210	WB	-2.46	-0.2	2.35
9	9	186	WB	-1.85	-1.629E-02	2.94
9	9	185	WB	-2.11	-0.86	1.62
10	10	186	DEAD	-49.09	-1.17	10.18
10	10	187	DEAD	-53.81	-16.92	18.5
10	10	230	DEAD	11.33	2.62	26.9
10	10	229	DEAD	16.06	18.37	18.57
10	10	186	LIVE	-47.69	22.51	7.88
10	10	187	LIVE	-61.32	-22.91	34.57
10	10	230	LIVE	33.81	5.63	51.46
10	10	229	LIVE	47.43	51.05	24.78
10	10	186	SX	26.8	37.43	57.79
10	10	187	SX	35.48	13.63	32.43
10	10	230	SX	25.45	5.27	38.51
10	10	229	SX	36.06	49.37	60.23
10	10	186	SY	17.26	128.49	92.23
10	10	187	SY	36.11	18.69	28.33
10	10	230	SY	50.92	16.57	43.66
10	10	229	SY	49.72	131.61	64.01
10	10	186	WB	-1.05	2.5	-0.16
10	10	187	WB	-2.12	-1.04	2.05
10	10	230	WB	2.86	0.45	3.12
10	10	229	WB	3.92	3.99	0.92

Table 31: Element Forces - Area Shells, Part 1 of 2

Area	AreaElem	Joint	OutputCase	F11	F22	F12
				Kgf/m	Kgf/m	Kgf/m
11	11	210	DEAD	-58.77	-10.26	5.3
11	11	211	DEAD	-60.77	-16.9	4.53
11	11	187	DEAD	-53.12	-14.6	11.4
11	11	186	DEAD	-51.13	-7.97	12.17
11	11	210	LIVE	-84.02	-14.38	27.36
11	11	211	LIVE	-81.88	-7.25	16.27
11	11	187	LIVE	-54.12	1.08	19.46
11	11	186	LIVE	-56.26	-6.06	30.55
11	11	210	SX	34.11	5.24	19.63
11	11	211	SX	32.04	11.56	20.22
11	11	187	SX	31.62	13.77	20.89
11	11	186	SX	32.74	4.24	11.32
11	11	210	SY	76.71	19.34	52.96
11	11	211	SY	57.71	47.27	32.14
11	11	187	SY	16.59	60.44	31.52
11	11	186	SY	32.81	6.25	34.68
11	11	210	WB	-3.97	-0.65	2.55
11	11	211	WB	-3.56	0.72	1.39
11	11	187	WB	-1.39	1.37	1.11
11	11	186	WB	-1.8	-1.945E-03	2.27
12	12	187	DEAD	-47.93	-15.16	17.17
12	12	188	DEAD	-66.7	-77.72	6.07
12	12	231	DEAD	10.93	-54.44	4.36
12	12	230	DEAD	29.7	8.13	15.47
12	12	187	LIVE	-58.	-21.91	36.63
12	12	188	LIVE	-69.1	-58.91	30.01
12	12	231	LIVE	52.57	-22.41	25.17
12	12	230	LIVE	63.67	14.59	31.8
12	12	187	SX	12.81	6.41	29.85
12	12	188	SX	19.71	38.02	45.93
12	12	231	SX	34.65	39.89	67.19
12	12	230	SX	30.58	12.06	50.93
12	12	187	SY	34.38	16.62	36.15
12	12	188	SY	19.81	118.98	76.75
12	12	231	SY	35.31	118.86	69.96
12	12	230	SY	45.35	16.38	34.64
12	12	187	WB	-2.18	-1.06	2.39
12	12	188	WB	-1.75	0.37	2.63
12	12	231	WB	4.82	2.34	2.23
12	12	230	WB	4.39	0.91	1.98
13	13	211	DEAD	-68.88	-19.33	18.57
13	13	212	DEAD	-70.67	-25.28	22.07
13	13	188	DEAD	-49.02	-18.79	13.56
13	13	187	DEAD	-47.23	-12.84	10.07
13	13	211	LIVE	-97.04	-11.79	22.98
13	13	212	LIVE	-102.05	-28.5	25.07
13	13	188	LIVE	-55.81	-14.63	23.62
13	13	187	LIVE	-50.8	2.08	21.53
13	13	211	SX	60.32	16.49	21.54
13	13	212	SX	64.37	23.22	23.38
13	13	188	SX	12.97	8.41	18.79
13	13	187	SX	11.	16.15	18.86
13	13	211	SY	84.67	43.16	36.44
13	13	212	SY	96.25	12.29	37.33

Table 31: Element Forces - Area Shells, Part 1 of 2

Area	AreaElem	Joint	OutputCase	F11	F22	F12
				Kgf/m	Kgf/m	Kgf/m
13	13	188	SY	25.68	16.7	33.85
13	13	187	SY	19.28	61.63	32.72
13	13	211	WB	-4.54	0.42	0.9
13	13	212	WB	-4.93	-0.87	0.82
13	13	188	WB	-1.84	5.812E-02	1.36
13	13	187	WB	-1.46	1.35	1.44
14	14	188	DEAD	-27.84	-66.07	13.78
14	14	189	DEAD	-42.33	-114.34	-10.9
14	14	232	DEAD	-5.64	-103.34	2.19
14	14	231	DEAD	8.84	-55.06	26.87
14	14	188	LIVE	-34.87	-48.64	32.91
14	14	189	LIVE	-51.17	-102.95	1.18
14	14	232	LIVE	22.13	-80.97	7.8
14	14	231	LIVE	38.42	-26.66	39.53
14	14	188	SX	5.37	32.87	50.8
14	14	189	SX	3.93	27.71	46.52
14	14	232	SX	70.75	47.83	51.
14	14	231	SX	70.25	50.16	48.55
14	14	188	SY	8.	115.7	80.87
14	14	189	SY	15.17	72.48	45.84
14	14	232	SY	40.84	79.25	111.28
14	14	231	SY	47.62	123.2	38.12
14	14	188	WB	-1.38	0.48	2.29
14	14	189	WB	-1.89	-1.21	0.98
14	14	232	WB	3.04	0.26	0.53
14	14	231	WB	3.54	1.96	1.83
15	15	172	DEAD	-48.14	1.66	25.96
15	15	173	DEAD	-40.11	0.94	23.23
15	15	284	DEAD	-44.76	-15.61	17.66
15	15	285	DEAD	-53.23	-15.6	19.89
15	15	172	LIVE	-32.9	4.86	16.31
15	15	173	LIVE	-25.54	7.65	12.27
15	15	284	LIVE	-27.39	2.07	15.8
15	15	285	LIVE	-34.87	-1.6	20.41
15	15	172	SX	44.7	40.98	138.86
15	15	173	SX	182.22	71.61	125.31
15	15	284	SX	156.83	108.43	64.1
15	15	285	SX	65.74	109.31	66.56
15	15	172	SY	120.53	51.55	269.65
15	15	173	SY	66.53	45.88	249.31
15	15	284	SY	77.99	280.84	98.62
15	15	285	SY	119.54	208.64	109.26
15	15	172	WB	0.47	-0.28	-0.4
15	15	173	WB	0.54	3.162E-02	-0.64
15	15	284	WB	0.88	1.29	7.479E-02
15	15	285	WB	0.82	0.94	0.4
16	16	212	DEAD	-92.29	-31.77	14.86
16	16	213	DEAD	-120.51	-125.84	76.61
16	16	189	DEAD	-38.38	-101.2	83.02
16	16	188	DEAD	-10.16	-7.13	21.27
16	16	212	LIVE	-124.96	-35.37	17.75
16	16	213	LIVE	-149.94	-118.66	75.67
16	16	189	LIVE	-46.58	-87.65	84.45
16	16	188	LIVE	-21.59	-4.36	26.52

Table 31: Element Forces - Area Shells, Part 1 of 2

Area	AreaElem	Joint	OutputCase	F11	F22	F12
				Kgf/m	Kgf/m	Kgf/m
16	16	212	SX	94.92	32.16	27.3
16	16	213	SX	96.81	38.73	36.03
16	16	189	SX	9.	8.97	23.86
16	16	188	SX	10.78	3.61	22.08
16	16	212	SY	119.98	19.38	37.81
16	16	213	SY	118.89	26.58	53.43
16	16	189	SY	29.38	25.14	61.93
16	16	188	SY	32.3	14.84	39.4
16	16	212	WB	-5.54	-1.05	0.63
16	16	213	WB	-5.8	-1.91	1.54
16	16	189	WB	-1.73	-0.69	1.92
16	16	188	WB	-1.47	0.17	1.02
17	17	213	DEAD	-138.71	-131.3	177.42
17	17	164	DEAD	-178.96	-265.46	115.78
17	17	190	DEAD	-17.43	-217.	18.84
17	17	189	DEAD	22.82	-82.84	80.48
17	17	213	LIVE	-167.59	-123.96	169.28
17	17	164	LIVE	-206.98	-255.27	108.14
17	17	190	LIVE	-31.79	-202.71	18.12
17	17	189	LIVE	7.6	-71.4	79.26
17	17	213	SX	128.16	48.26	43.77
17	17	164	SX	121.12	27.37	32.02
17	17	190	SX	31.87	26.04	32.3
17	17	189	SX	23.5	6.14	31.35
17	17	213	SY	140.38	35.23	94.01
17	17	164	SY	159.27	97.64	57.46
17	17	190	SY	50.49	73.57	70.75
17	17	189	SY	22.64	27.28	45.67
17	17	213	WB	-6.12	-2.01	2.95
17	17	164	WB	-6.91	-4.66	1.64
17	17	190	WB	-1.94	-3.17	0.24
17	17	189	WB	-1.15	-0.52	1.55
18	18	189	DEAD	18.88	-95.98	-13.45
18	18	190	DEAD	9.07	-128.67	16.55
18	18	162	DEAD	-29.64	-140.29	-68.29
18	18	232	DEAD	-19.83	-107.59	-98.3
18	18	189	LIVE	3.01	-86.7	-4.01
18	18	190	LIVE	-4.45	-111.58	13.77
18	18	162	LIVE	3.93	-109.06	-46.53
18	18	232	LIVE	11.39	-84.19	-64.31
18	18	189	SX	18.38	24.01	40.03
18	18	190	SX	12.64	58.7	34.64
18	18	162	SX	112.05	89.	75.43
18	18	232	SX	104.6	57.09	89.18
18	18	189	SY	10.99	74.88	76.9
18	18	190	SY	29.93	188.77	101.08
18	18	162	SY	51.13	187.64	74.89
18	18	232	SY	48.48	75.45	102.61
18	18	189	WB	-1.31	-1.04	0.61
18	18	190	WB	-1.23	-0.79	-3.725E-03
18	18	162	WB	3.15	0.53	0.86
18	18	232	WB	3.07	0.27	1.47
19	19	190	DEAD	8.1	-128.96	8.71
19	19	191	DEAD	20.9	-86.3	77.85

Table 31: Element Forces - Area Shells, Part 1 of 2

Area	AreaElem	Joint	OutputCase	F11	F22	F12
				Kgf/m	Kgf/m	Kgf/m
19	19	233	DEAD	-67.75	-112.9	159.22
19	19	162	DEAD	-80.55	-155.56	90.08
19	19	190	LIVE	1.7	-109.73	7.88
19	19	191	LIVE	9.76	-82.86	79.21
19	19	233	LIVE	-49.55	-100.65	154.72
19	19	162	LIVE	-57.61	-127.53	83.4
19	19	190	SX	70.97	78.35	35.28
19	19	191	SX	59.22	29.95	42.11
19	19	233	SX	56.42	16.53	61.27
19	19	162	SX	51.23	58.53	52.62
19	19	190	SY	38.4	180.89	91.16
19	19	191	SY	60.01	29.72	108.55
19	19	233	SY	107.51	71.06	197.13
19	19	162	SY	152.23	225.01	178.16
19	19	190	WB	-0.45	-0.55	4.468E-02
19	19	191	WB	-0.72	-1.42	1.62
19	19	233	WB	0.6	-1.03	2.61
19	19	162	WB	0.86	-0.16	1.03
20	20	191	DEAD	-54.43	-108.9	69.68
20	20	192	DEAD	-36.4	-48.8	-22.49
20	20	234	DEAD	-18.73	-43.5	-6.2
20	20	233	DEAD	-36.77	-103.6	85.97
20	20	191	LIVE	-61.51	-104.24	69.47
20	20	192	LIVE	-45.8	-51.89	-17.15
20	20	234	LIVE	-0.3	-38.24	-0.95
20	20	233	LIVE	-16.01	-90.59	85.67
20	20	191	SX	53.4	29.23	46.92
20	20	192	SX	47.47	16.09	45.24
20	20	234	SX	29.35	20.15	51.46
20	20	233	SX	24.8	12.51	51.42
20	20	191	SY	38.63	42.45	133.83
20	20	192	SY	42.78	49.22	119.89
20	20	234	SY	52.91	39.78	111.9
20	20	233	SY	70.31	58.68	125.65
20	20	191	WB	-1.84	-1.76	1.24
20	20	192	WB	-1.73	-1.39	-7.165E-02
20	20	234	WB	1.57	-0.4	0.28
20	20	233	WB	1.46	-0.77	1.59
21	21	192	DEAD	-85.84	-63.63	-17.55
21	21	193	DEAD	-81.31	-48.53	18.62
21	21	235	DEAD	-4.28	-25.43	35.75
21	21	234	DEAD	-8.81	-40.52	-0.42
21	21	192	LIVE	-92.41	-65.87	-12.79
21	21	193	LIVE	-88.81	-53.87	18.4
21	21	235	LIVE	6.45	-25.29	40.75
21	21	234	LIVE	2.85	-37.29	9.56
21	21	192	SX	27.06	12.21	41.43
21	21	193	SX	30.36	16.05	33.43
21	21	235	SX	19.83	16.	33.94
21	21	234	SX	17.71	16.05	38.93
21	21	192	SY	22.59	40.67	99.82
21	21	193	SY	24.81	41.14	73.2
21	21	235	SY	23.28	39.92	44.22
21	21	234	SY	24.75	41.6	70.26

Table 31: Element Forces - Area Shells, Part 1 of 2

Area	AreaElem	Joint	OutputCase	F11	F22	F12
				Kgf/m	Kgf/m	Kgf/m
21	21	192	WB	-2.45	-1.61	-4.444E-03
21	21	193	WB	-2.42	-1.51	0.22
21	21	235	WB	1.06	-0.46	1.12
21	21	234	WB	1.03	-0.56	0.89
22	22	193	DEAD	-58.88	-41.81	21.73
22	22	194	DEAD	-72.78	-88.14	-42.22
22	22	236	DEAD	-37.77	-77.63	-40.97
22	22	235	DEAD	-23.87	-31.3	22.98
22	22	193	LIVE	-72.54	-48.98	22.76
22	22	194	LIVE	-83.58	-85.8	-23.81
22	22	236	LIVE	-22.72	-67.54	-23.58
22	22	235	LIVE	-11.67	-30.72	22.99
22	22	193	SX	6.01	10.54	28.77
22	22	194	SX	8.27	4.65	26.3
22	22	236	SX	70.32	24.39	43.85
22	22	235	SX	71.15	28.89	42.02
22	22	193	SY	10.75	41.72	55.3
22	22	194	SY	14.79	22.64	31.77
22	22	236	SY	31.99	20.53	28.07
22	22	235	SY	28.87	39.53	65.44
22	22	193	WB	-2.67	-1.58	0.4
22	22	194	WB	-2.61	-1.38	1.02
22	22	236	WB	0.82	-0.35	0.94
22	22	235	WB	0.76	-0.55	0.33
23	23	194	DEAD	-6.59	-68.28	-40.36
23	23	195	DEAD	-36.07	-166.56	7.31
23	23	177	DEAD	-89.83	-182.69	-71.03
23	23	236	DEAD	-60.34	-84.41	-118.7
23	23	194	LIVE	-29.29	-69.51	-21.75
23	23	195	LIVE	-50.44	-140.04	7.65
23	23	177	LIVE	-63.36	-143.91	-59.43
23	23	236	LIVE	-42.2	-73.39	-88.82
23	23	194	SX	31.38	7.58	26.26
23	23	195	SX	29.88	22.29	30.07
23	23	177	SX	121.74	52.96	52.83
23	23	236	SX	118.57	38.86	55.65
23	23	194	SY	16.8	22.11	31.21
23	23	195	SY	38.8	82.21	55.84
23	23	177	SY	55.57	85.11	45.5
23	23	236	SY	39.82	26.37	37.72
23	23	194	WB	-2.65	-1.4	1.08
23	23	195	WB	-2.32	-0.31	8.238E-02
23	23	177	WB	0.99	0.68	-0.19
23	23	236	WB	0.67	-0.4	0.81
24	24	285	DEAD	-39.16	-12.22	16.13
24	24	284	DEAD	-35.47	-11.11	16.49
24	24	282	DEAD	-35.81	-11.86	13.62
24	24	283	DEAD	-39.56	-12.98	13.26
24	24	285	LIVE	-25.49	1.67	22.38
24	24	284	LIVE	-14.68	4.91	18.75
24	24	282	LIVE	-18.9	-9.49	14.76
24	24	283	LIVE	-29.8	-12.76	18.35
24	24	285	SX	56.08	87.88	38.58
24	24	284	SX	108.09	110.34	62.91

Table 31: Element Forces - Area Shells, Part 1 of 2

Area	AreaElem	Joint	OutputCase	F11	F22	F12
				Kgf/m	Kgf/m	Kgf/m
24	24	282	SX	105.5	25.16	47.84
24	24	283	SX	79.59	9.32	24.53
24	24	285	SY	148.19	178.52	65.3
24	24	284	SY	181.84	272.41	66.32
24	24	282	SY	123.12	60.08	59.53
24	24	283	SY	206.12	40.54	58.95
24	24	285	WB	0.54	0.96	0.74
24	24	284	WB	1.19	1.16	0.36
24	24	282	WB	0.84	-5.857E-02	0.15
24	24	283	WB	0.19	-0.25	0.53
25	25	164	DEAD	-142.67	-254.57	-104.52
25	25	214	DEAD	-105.28	-129.94	-196.77
25	25	191	DEAD	18.99	-92.66	-81.25
25	25	190	DEAD	-18.4	-217.29	11.
25	25	164	LIVE	-194.54	-251.54	-98.85
25	25	214	LIVE	-158.21	-130.45	-185.21
25	25	191	LIVE	10.69	-79.78	-74.13
25	25	190	LIVE	-25.64	-200.87	12.24
25	25	164	SX	40.93	28.52	50.06
25	25	214	SX	37.41	16.37	69.34
25	25	191	SX	54.01	11.25	35.61
25	25	190	SX	52.44	15.1	31.99
25	25	164	SY	61.82	73.91	79.06
25	25	214	SY	42.4	20.43	73.31
25	25	191	SY	61.72	12.62	56.47
25	25	190	SY	86.49	82.77	62.93
25	25	164	WB	-8.7	-5.19	-1.72
25	25	214	WB	-8.	-2.86	-3.05
25	25	191	WB	-0.47	-0.6	-1.04
25	25	190	WB	-1.17	-2.94	0.29
26	26	214	DEAD	-85.61	-124.04	-91.97
26	26	215	DEAD	-57.28	-29.6	1.77
26	26	192	DEAD	-28.	-20.82	4.32
26	26	191	DEAD	-56.34	-115.26	-89.42
26	26	214	LIVE	-139.68	-124.89	-87.58
26	26	215	LIVE	-114.11	-39.65	0.46
26	26	192	LIVE	-35.01	-15.92	4.17
26	26	191	LIVE	-60.58	-101.16	-83.86
26	26	214	SX	12.39	6.86	49.61
26	26	215	SX	12.02	1.7	47.67
26	26	192	SX	49.18	14.34	45.42
26	26	191	SX	47.73	10.02	46.28
26	26	214	SY	48.7	15.26	55.21
26	26	215	SY	52.06	7.68	61.78
26	26	192	SY	36.05	12.86	87.93
26	26	191	SY	34.84	24.32	77.81
26	26	214	WB	-7.68	-2.77	-1.54
26	26	215	WB	-7.36	-1.7	-0.18
26	26	192	WB	-1.27	0.13	-6.192E-02
26	26	191	WB	-1.59	-0.94	-1.42
27	27	215	DEAD	-35.1	-22.94	4.
27	27	216	DEAD	-34.27	-20.17	-21.4
27	27	193	DEAD	-76.61	-32.87	-16.15
27	27	192	DEAD	-77.44	-35.65	9.25

Table 31: Element Forces - Area Shells, Part 1 of 2

Area	AreaElem	Joint	OutputCase	F11	F22	F12
				Kgf/m	Kgf/m	Kgf/m
27	27	215	LIVE	-92.76	-33.24	2.5
27	27	216	LIVE	-91.57	-29.28	-19.4
27	27	193	LIVE	-80.43	-25.93	-13.36
27	27	192	LIVE	-81.62	-29.9	8.54
27	27	215	SX	54.26	14.94	54.83
27	27	216	SX	52.65	9.54	51.68
27	27	193	SX	27.89	3.95	34.98
27	27	192	SX	29.65	8.8	38.41
27	27	215	SY	73.55	15.91	64.91
27	27	216	SY	74.51	14.99	53.49
27	27	193	SY	28.06	5.7	54.84
27	27	192	SY	31.79	20.67	69.06
27	27	215	WB	-6.93	-1.57	-0.21
27	27	216	WB	-6.88	-1.4	-0.34
27	27	193	WB	-1.95	8.044E-02	-0.13
27	27	192	WB	-2.	-8.616E-02	5.282E-03
28	28	216	DEAD	-42.39	-22.6	-15.89
28	28	217	DEAD	-59.08	-78.25	60.35
28	28	194	DEAD	-70.88	-81.79	63.2
28	28	193	DEAD	-54.18	-26.14	-13.04
28	28	216	LIVE	-98.45	-31.34	-14.3
28	28	217	LIVE	-112.66	-78.7	53.81
28	28	194	LIVE	-78.37	-68.42	59.11
28	28	193	LIVE	-64.16	-21.05	-9.
28	28	216	SX	108.84	26.41	48.42
28	28	217	SX	111.3	35.1	59.67
28	28	194	SX	7.25	4.79	42.43
28	28	193	SX	8.52	7.04	32.53
28	28	216	SY	112.87	24.	49.86
28	28	217	SY	113.14	25.9	56.67
28	28	194	SY	16.86	10.55	48.87
28	28	193	SY	16.8	8.66	42.52
28	28	216	WB	-6.82	-1.38	-0.22
28	28	217	WB	-6.85	-1.49	0.34
28	28	194	WB	-2.22	-0.1	0.62
28	28	193	WB	-2.19	6.595E-03	5.363E-02
29	29	217	DEAD	-79.32	-84.32	137.33
29	29	165	DEAD	-113.58	-198.51	78.27
29	29	195	DEAD	-38.94	-176.12	6.
29	29	194	DEAD	-4.68	-61.93	65.06
29	29	217	LIVE	-128.73	-83.52	123.81
29	29	165	LIVE	-162.02	-194.52	69.36
29	29	195	LIVE	-57.37	-163.12	6.72
29	29	194	LIVE	-24.07	-52.13	61.18
29	29	217	SX	165.27	51.33	64.61
29	29	165	SX	155.62	28.45	53.76
29	29	195	SX	38.96	43.34	31.74
29	29	194	SX	30.96	6.96	41.69
29	29	217	SY	152.41	37.67	55.7
29	29	165	SY	148.05	97.99	50.12
29	29	195	SY	23.42	98.89	36.27
29	29	194	SY	19.9	11.65	47.71
29	29	217	WB	-6.74	-1.46	0.98
29	29	165	WB	-7.25	-3.13	0.4

Table 31: Element Forces - Area Shells, Part 1 of 2

Area	AreaElem	Joint	OutputCase	F11	F22	F12
				Kgf/m	Kgf/m	Kgf/m
29	29	195	WB	-2.77	-1.79	0.1
29	29	194	WB	-2.26	-0.11	0.68
30	30	195	DEAD	-48.82	-170.38	4.19
30	30	196	DEAD	-15.	-57.66	53.56
30	30	237	DEAD	-49.15	-67.91	116.34
30	30	177	DEAD	-82.97	-180.63	66.97
30	30	195	LIVE	-60.66	-143.1	1.1
30	30	196	LIVE	-38.01	-67.62	42.82
30	30	237	LIVE	-28.72	-64.84	95.46
30	30	177	LIVE	-51.37	-140.32	53.73
30	30	195	SX	68.71	41.52	31.82
30	30	196	SX	53.81	43.34	38.7
30	30	237	SX	130.73	76.83	61.07
30	30	177	SX	118.02	27.57	56.05
30	30	195	SY	71.45	89.29	69.72
30	30	196	SY	42.61	156.08	93.42
30	30	237	SY	89.12	170.13	126.67
30	30	177	SY	73.8	82.27	102.37
30	30	195	WB	-2.29	-0.3	-0.32
30	30	196	WB	-2.81	-2.05	-0.23
30	30	237	WB	1.05	-0.89	-0.13
30	30	177	WB	1.58	0.86	-0.22
31	31	196	DEAD	-72.21	-74.82	56.54
31	31	197	DEAD	-70.4	-68.79	-42.4
31	31	238	DEAD	-25.66	-55.37	-36.38
31	31	237	DEAD	-27.47	-61.4	62.56
31	31	196	LIVE	-84.04	-81.43	45.41
31	31	197	LIVE	-82.26	-75.52	-39.58
31	31	238	LIVE	-14.48	-55.19	-28.16
31	31	237	LIVE	-16.26	-61.1	56.82
31	31	196	SX	14.18	44.03	34.69
31	31	197	SX	18.28	30.85	25.11
31	31	238	SX	47.29	46.81	61.85
31	31	237	SX	51.15	60.75	48.54
31	31	196	SY	31.	143.52	72.65
31	31	197	SY	41.25	107.91	16.31
31	31	238	SY	64.55	137.36	99.24
31	31	237	SY	74.87	173.21	38.46
31	31	196	WB	-2.72	-2.02	-0.21
31	31	197	WB	-2.68	-1.88	-0.49
31	31	238	WB	0.61	-0.89	0.15
31	31	237	WB	0.57	-1.03	0.43
32	32	197	DEAD	-10.43	-50.8	-40.72
32	32	198	DEAD	-46.57	-171.27	15.7
32	32	178	DEAD	-81.2	-181.66	-45.37
32	32	238	DEAD	-45.06	-61.19	-101.8
32	32	197	LIVE	-29.44	-59.67	-35.98
32	32	198	LIVE	-55.32	-145.94	15.7
32	32	178	LIVE	-60.91	-147.62	-34.34
32	32	238	LIVE	-35.02	-61.35	-86.03
32	32	197	SX	44.91	39.51	28.27
32	32	198	SX	42.2	24.48	40.32
32	32	178	SX	36.07	32.76	75.14
32	32	238	SX	36.65	42.9	64.61

Table 31: Element Forces - Area Shells, Part 1 of 2

Area	AreaElem	Joint	OutputCase	F11	F22	F12
				Kgf/m	Kgf/m	Kgf/m
32	32	197	SY	33.4	112.04	31.16
32	32	198	SY	76.89	59.66	100.73
32	32	178	SY	44.51	39.79	127.9
32	32	238	SY	87.9	145.32	59.72
32	32	197	WB	-2.42	-1.8	-0.27
32	32	198	WB	-2.01	-0.44	0.25
32	32	178	WB	0.62	0.35	0.32
32	32	238	WB	0.21	-1.01	-0.2
33	33	165	DEAD	-110.43	-197.57	-52.51
33	33	218	DEAD	-68.06	-56.33	-101.58
33	33	196	DEAD	-9.31	-38.71	-46.18
33	33	195	DEAD	-51.68	-179.95	2.88
33	33	165	LIVE	-167.78	-196.24	-48.88
33	33	218	LIVE	-127.	-60.32	-89.85
33	33	196	LIVE	-26.8	-30.26	-40.8
33	33	195	LIVE	-67.58	-166.18	0.18
33	33	165	SX	31.84	31.68	63.81
33	33	218	SX	36.46	16.64	75.07
33	33	196	SX	57.5	4.88	44.76
33	33	195	SX	53.57	25.08	35.58
33	33	165	SY	81.59	72.65	49.85
33	33	218	SY	103.07	14.39	52.91
33	33	196	SY	48.37	12.11	44.14
33	33	195	SY	40.82	92.26	41.78
33	33	165	WB	-8.02	-3.37	-0.61
33	33	218	WB	-7.44	-1.41	-0.64
33	33	196	WB	-2.15	0.17	-0.32
33	33	195	WB	-2.73	-1.78	-0.3
34	34	218	DEAD	-56.66	-52.91	-44.34
34	34	219	DEAD	-57.38	-55.32	63.9
34	34	197	DEAD	-67.24	-58.28	65.03
34	34	196	DEAD	-66.52	-55.87	-43.2
34	34	218	LIVE	-119.36	-58.02	-37.96
34	34	219	LIVE	-120.27	-61.05	57.29
34	34	197	LIVE	-73.73	-47.09	57.04
34	34	196	LIVE	-72.83	-44.06	-38.21
34	34	218	SX	68.26	4.83	58.23
34	34	219	SX	71.49	17.29	49.67
34	34	197	SX	26.75	3.42	30.92
34	34	196	SX	25.64	11.37	40.1
34	34	218	SY	97.58	6.74	43.32
34	34	219	SY	96.76	18.4	50.09
34	34	197	SY	69.34	12.63	36.41
34	34	196	SY	72.42	11.97	35.68
34	34	218	WB	-7.56	-1.45	-0.18
34	34	219	WB	-7.59	-1.54	0.37
34	34	197	WB	-2.08	0.12	0.25
34	34	196	WB	-2.06	0.2	-0.3
35	35	219	DEAD	-85.33	-63.7	126.12
35	35	166	DEAD	-123.2	-189.93	71.17
35	35	198	DEAD	-45.14	-166.51	11.77
35	35	197	DEAD	-7.27	-40.29	66.72
35	35	219	LIVE	-144.72	-68.39	113.84
35	35	166	LIVE	-180.73	-188.41	65.66

Table 31: Element Forces - Area Shells, Part 1 of 2

Area	AreaElem	Joint	OutputCase	F11	F22	F12
				Kgf/m	Kgf/m	Kgf/m
35	35	198	LIVE	-56.92	-151.26	12.46
35	35	197	LIVE	-20.91	-31.24	60.64
35	35	219	SX	136.85	38.03	57.44
35	35	166	SX	128.61	22.89	57.59
35	35	198	SX	48.95	43.39	26.04
35	35	197	SX	44.43	14.02	26.16
35	35	219	SY	123.44	33.18	68.82
35	35	166	SY	113.02	63.37	65.48
35	35	198	SY	48.07	67.35	55.44
35	35	197	SY	58.51	16.46	59.44
35	35	219	WB	-7.66	-1.56	0.84
35	35	166	WB	-8.1	-3.02	0.59
35	35	198	WB	-2.26	-1.27	0.21
35	35	197	WB	-1.82	0.19	0.46
36	36	166	DEAD	-121.94	-189.55	-56.63
36	36	220	DEAD	-82.29	-57.37	-95.49
36	36	199	DEAD	-16.1	-37.51	-25.97
36	36	198	DEAD	-55.75	-169.69	12.89
36	36	166	LIVE	-173.88	-186.35	-52.47
36	36	220	LIVE	-135.77	-59.3	-88.92
36	36	199	LIVE	-36.06	-29.39	-26.08
36	36	198	LIVE	-74.18	-156.44	10.38
36	36	166	SX	37.07	37.48	60.6
36	36	220	SX	38.88	17.38	61.66
36	36	199	SX	31.95	2.87	32.48
36	36	198	SX	26.49	30.48	31.17
36	36	166	SY	103.65	53.82	59.94
36	36	220	SY	120.09	22.01	66.53
36	36	199	SY	28.84	13.2	64.76
36	36	198	SY	21.57	76.81	55.2
36	36	166	WB	-7.51	-2.84	-0.58
36	36	220	WB	-7.02	-1.2	-0.96
36	36	199	WB	-2.56	0.14	-0.45
36	36	198	WB	-3.06	-1.51	-7.384E-02
37	37	220	DEAD	-69.19	-53.44	-12.3
37	37	221	DEAD	-56.21	-10.19	24.79
37	37	200	DEAD	-76.55	-16.29	6.86
37	37	199	DEAD	-89.52	-59.54	-30.22
37	37	220	LIVE	-124.78	-56.01	-11.62
37	37	221	LIVE	-113.28	-17.67	20.39
37	37	200	LIVE	-85.81	-9.43	-0.44
37	37	199	LIVE	-97.31	-47.77	-32.45
37	37	220	SX	37.88	2.59	50.7
37	37	221	SX	40.06	12.84	43.6
37	37	200	SX	14.65	14.07	21.61
37	37	199	SX	11.88	11.66	28.88
37	37	220	SY	72.15	5.4	77.58
37	37	221	SY	82.13	39.31	80.19
37	37	200	SY	29.73	25.64	52.63
37	37	199	SY	19.55	13.37	51.81
37	37	220	WB	-6.97	-1.19	-0.12
37	37	221	WB	-6.91	-0.98	-5.632E-02
37	37	200	WB	-2.53	0.34	-0.66
37	37	199	WB	-2.6	0.13	-0.73

Table 31: Element Forces - Area Shells, Part 1 of 2

Area	AreaElem	Joint	OutputCase	F11	F22	F12
				Kgf/m	Kgf/m	Kgf/m
38	38	221	DEAD	-66.94	-13.41	-8.57
38	38	222	DEAD	-79.81	-56.31	46.5
38	38	201	DEAD	-85.13	-57.9	67.05
38	38	200	DEAD	-72.26	-15.01	11.98
38	38	221	LIVE	-121.34	-20.09	-13.12
38	38	222	LIVE	-134.1	-62.61	38.1
38	38	201	LIVE	-90.75	-49.61	58.29
38	38	200	LIVE	-77.99	-7.08	7.06
38	38	221	SX	80.87	18.39	37.32
38	38	222	SX	82.29	21.66	34.54
38	38	201	SX	34.18	13.01	26.41
38	38	200	SX	36.62	21.03	28.29
38	38	221	SY	66.42	28.51	61.52
38	38	222	SY	64.25	15.59	48.49
38	38	201	SY	27.84	11.73	70.38
38	38	200	SY	32.9	27.03	81.57
38	38	221	WB	-6.85	-0.96	-0.67
38	38	222	WB	-7.09	-1.76	9.595E-02
38	38	201	WB	-2.27	-0.32	0.42
38	38	200	WB	-2.03	0.49	-0.34
39	39	222	DEAD	-99.91	-62.34	147.19
39	39	167	DEAD	-158.2	-256.62	75.81
39	39	202	DEAD	-68.71	-229.78	-10.67
39	39	201	DEAD	-10.42	-35.49	60.71
39	39	222	LIVE	-149.02	-67.09	133.91
39	39	167	LIVE	-205.54	-255.5	67.87
39	39	202	LIVE	-75.82	-216.58	-16.73
39	39	201	LIVE	-19.29	-28.17	49.31
39	39	222	SX	123.92	34.13	43.31
39	39	167	SX	116.74	26.15	38.29
39	39	202	SX	58.25	47.28	16.04
39	39	201	SX	52.41	18.52	16.88
39	39	222	SY	87.84	22.19	71.41
39	39	167	SY	78.81	42.81	81.99
39	39	202	SY	30.4	55.89	57.5
39	39	201	SY	27.8	11.35	46.02
39	39	222	WB	-6.95	-1.72	1.57
39	39	167	WB	-7.95	-5.03	0.68
39	39	202	WB	-2.08	-3.27	-0.83
39	39	201	WB	-1.09	3.783E-02	5.751E-02
40	40	167	DEAD	-188.48	-265.71	-110.32
40	40	223	DEAD	-134.02	-84.16	-163.36
40	40	203	DEAD	16.98	-38.86	-83.37
40	40	202	DEAD	-37.48	-220.41	-30.33
40	40	167	LIVE	-211.48	-257.28	-111.69
40	40	223	LIVE	-158.53	-80.78	-166.35
40	40	203	LIVE	2.67	-32.42	-91.31
40	40	202	LIVE	-50.28	-208.92	-36.65
40	40	167	SX	19.43	39.12	31.
40	40	223	SX	20.06	40.1	32.77
40	40	203	SX	20.29	31.29	10.38
40	40	202	SX	20.78	30.76	15.04
40	40	167	SY	48.69	55.7	53.41
40	40	223	SY	57.17	50.91	48.7

Table 31: Element Forces - Area Shells, Part 1 of 2

Area	AreaElem	Joint	OutputCase	F11	F22	F12
				Kgf/m	Kgf/m	Kgf/m
40	40	203	SY	24.97	39.97	19.13
40	40	202	SY	14.48	50.91	52.15
40	40	167	WB	-5.93	-4.43	-2.32
40	40	223	WB	-5.	-1.32	-3.49
40	40	203	WB	-1.23	-0.19	-2.46
40	40	202	WB	-2.17	-3.3	-1.29
41	41	223	DEAD	-97.53	-73.21	-65.26
41	41	224	DEAD	-82.22	-22.19	1.76
41	41	204	DEAD	-40.7	-9.73	-22.05
41	41	203	DEAD	-56.	-60.76	-89.06
41	41	223	LIVE	-118.	-68.62	-73.03
41	41	224	LIVE	-104.89	-24.91	-9.73
41	41	204	LIVE	-48.89	-8.11	-35.54
41	41	203	LIVE	-62.	-51.82	-98.84
41	41	223	SX	9.65	34.7	12.99
41	41	224	SX	12.72	12.61	15.11
41	41	204	SX	15.2	10.17	24.84
41	41	203	SX	8.21	32.46	19.64
41	41	223	SY	39.81	45.55	20.2
41	41	224	SY	35.04	21.01	9.33
41	41	204	SY	12.18	13.34	16.9
41	41	203	SY	8.16	37.05	23.51
41	41	223	WB	-3.92	-1.	-2.01
41	41	224	WB	-3.84	-0.71	-1.08
41	41	204	WB	-1.63	-5.072E-02	-1.81
41	41	203	WB	-1.71	-0.34	-2.74
42	42	224	DEAD	-61.79	-16.06	-16.38
42	42	225	DEAD	-66.05	-30.23	-25.06
42	42	205	DEAD	-57.58	-27.69	-16.36
42	42	204	DEAD	-53.33	-13.52	-7.69
42	42	224	LIVE	-76.33	-16.34	-28.12
42	42	225	LIVE	-80.76	-31.1	-36.35
42	42	205	LIVE	-64.52	-26.23	-30.29
42	42	204	LIVE	-60.09	-11.47	-22.06
42	42	224	SX	20.47	14.2	19.5
42	42	225	SX	19.94	19.31	22.73
42	42	205	SX	13.15	14.99	42.02
42	42	204	SX	14.94	9.06	38.56
42	42	224	SY	40.25	23.73	10.65
42	42	225	SY	42.05	32.62	11.68
42	42	205	SY	15.06	18.89	19.66
42	42	204	SY	17.65	9.38	15.83
42	42	224	WB	-2.66	-0.36	-1.47
42	42	225	WB	-2.77	-0.75	-1.57
42	42	205	WB	-1.79	-0.46	-1.65
42	42	204	WB	-1.67	-6.530E-02	-1.55
43	43	225	DEAD	-64.62	-29.8	-1.26
43	43	226	DEAD	-61.53	-19.5	16.37
43	43	206	DEAD	-41.1	-13.37	-4.07
43	43	205	DEAD	-44.19	-23.67	-21.7
43	43	225	LIVE	-70.82	-28.12	-13.66
43	43	226	LIVE	-68.98	-21.99	3.21
43	43	206	LIVE	-46.64	-15.29	-19.44
43	43	205	LIVE	-48.48	-21.41	-36.31

Table 31: Element Forces - Area Shells, Part 1 of 2

Area	AreaElem	Joint	OutputCase	F11	F22	F12
				Kgf/m	Kgf/m	Kgf/m
43	43	225	SX	21.84	20.39	26.5
43	43	226	SX	24.72	15.	39.06
43	43	206	SX	6.3	6.07	63.51
43	43	205	SX	9.27	20.2	50.99
43	43	225	SY	44.54	33.41	14.72
43	43	226	SY	43.08	24.37	25.51
43	43	206	SY	12.65	9.65	35.13
43	43	205	SY	11.1	21.25	24.64
43	43	225	WB	-1.93	-0.5	-1.18
43	43	226	WB	-1.97	-0.65	-0.9
43	43	206	WB	-1.35	-0.47	-1.52
43	43	205	WB	-1.31	-0.31	-1.8
44	44	226	DEAD	-74.02	-23.25	15.83
44	44	227	DEAD	-83.57	-55.07	23.98
44	44	207	DEAD	-18.01	-35.4	16.97
44	44	206	DEAD	-8.47	-3.58	8.83
44	44	226	LIVE	-72.1	-22.92	4.04
44	44	227	LIVE	-82.82	-58.64	12.17
44	44	207	LIVE	-23.12	-40.73	2.49
44	44	206	LIVE	-12.4	-5.01	-5.64
44	44	226	SX	21.66	14.33	47.17
44	44	227	SX	27.32	44.55	22.61
44	44	207	SX	15.67	33.27	35.18
44	44	206	SX	26.51	7.85	59.4
44	44	226	SY	45.91	25.21	31.54
44	44	227	SY	43.98	33.34	19.6
44	44	207	SY	12.62	26.51	27.15
44	44	206	SY	14.42	10.1	36.98
44	44	226	WB	-1.34	-0.47	-0.78
44	44	227	WB	-1.65	-1.48	-0.57
44	44	207	WB	-0.92	-1.26	-0.94
44	44	206	WB	-0.61	-0.25	-1.15
45	45	198	DEAD	-57.18	-174.45	16.83
45	45	199	DEAD	-18.7	-46.19	52.92
45	45	239	DEAD	19.09	-34.86	113.42
45	45	178	DEAD	-19.39	-163.12	77.34
45	45	198	LIVE	-72.58	-151.12	13.62
45	45	199	LIVE	-41.85	-48.68	38.38
45	45	239	LIVE	54.6	-19.74	85.31
45	45	178	LIVE	23.87	-122.19	60.55
45	45	198	SX	43.44	38.03	35.15
45	45	199	SX	36.48	14.38	19.89
45	45	239	SX	192.04	54.37	47.69
45	45	178	SX	186.68	40.13	53.25
45	45	198	SY	43.04	52.03	97.72
45	45	199	SY	34.68	16.88	30.24
45	45	239	SY	74.59	25.93	43.75
45	45	178	SY	72.72	46.57	46.08
45	45	198	WB	-2.81	-0.68	-3.775E-02
45	45	199	WB	-2.92	-1.05	-0.58
45	45	239	WB	3.56	0.89	-0.89
45	45	178	WB	3.67	1.27	-0.35
46	46	199	DEAD	-92.12	-68.22	48.66
46	46	200	DEAD	-82.49	-36.11	11.15

Table 31: Element Forces - Area Shells, Part 1 of 2

Area	AreaElem	Joint	OutputCase	F11	F22	F12
				Kgf/m	Kgf/m	Kgf/m
46	46	240	DEAD	60.	6.63	3.35
46	46	239	DEAD	50.36	-25.47	40.87
46	46	199	LIVE	-103.09	-67.05	32.
46	46	200	LIVE	-95.44	-41.53	1.94
46	46	240	LIVE	85.39	12.71	-1.95
46	46	239	LIVE	77.73	-12.81	28.11
46	46	199	SX	12.03	5.33	23.43
46	46	200	SX	8.45	14.39	19.8
46	46	240	SX	134.7	28.88	41.91
46	46	239	SX	137.95	38.31	41.87
46	46	199	SY	27.39	16.91	22.51
46	46	200	SY	18.03	21.92	36.2
46	46	240	SY	63.72	22.96	68.89
46	46	239	SY	70.36	28.24	44.52
46	46	199	WB	-2.95	-1.06	-0.86
46	46	200	WB	-3.	-1.21	-0.71
46	46	240	WB	3.23	0.66	-0.47
46	46	239	WB	3.27	0.81	-0.62
47	47	200	DEAD	-78.21	-34.83	16.27
47	47	201	DEAD	-93.42	-85.54	-32.19
47	47	241	DEAD	52.58	-41.74	-26.94
47	47	240	DEAD	67.8	8.98	21.52
47	47	200	LIVE	-87.62	-39.19	9.44
47	47	201	LIVE	-100.96	-83.64	-34.86
47	47	241	LIVE	72.57	-31.58	-34.75
47	47	240	LIVE	85.91	12.87	9.55
47	47	200	SX	28.6	8.46	24.68
47	47	201	SX	31.38	6.9	36.62
47	47	241	SX	91.7	21.32	43.34
47	47	240	SX	89.47	15.52	40.69
47	47	200	SY	20.04	20.76	67.31
47	47	201	SY	31.71	23.57	106.07
47	47	241	SY	84.17	38.2	57.64
47	47	240	SY	73.32	15.17	22.6
47	47	200	WB	-2.49	-1.06	-0.39
47	47	201	WB	-2.62	-1.48	-0.97
47	47	241	WB	2.48	4.800E-02	-1.39
47	47	240	WB	2.61	0.47	-0.81
48	48	201	DEAD	-18.71	-63.13	-38.54
48	48	202	DEAD	-38.41	-128.8	10.49
48	48	179	DEAD	10.21	-114.21	-53.93
48	48	241	DEAD	29.91	-48.54	-102.96
48	48	201	LIVE	-29.5	-62.21	-43.83
48	48	202	LIVE	-44.36	-111.72	-2.96
48	48	179	LIVE	28.79	-89.77	-57.8
48	48	241	LIVE	43.64	-40.26	-98.67
48	48	201	SX	49.24	9.07	34.31
48	48	202	SX	55.87	46.98	28.08
48	48	179	SX	58.84	49.58	43.36
48	48	241	SX	50.87	12.46	59.9
48	48	201	SY	30.36	21.56	82.14
48	48	202	SY	47.57	97.	12.51
48	48	179	SY	121.93	117.2	70.21
48	48	241	SY	103.85	45.28	156.58

Table 31: Element Forces - Area Shells, Part 1 of 2

Area	AreaElem	Joint	OutputCase	F11	F22	F12
				Kgf/m	Kgf/m	Kgf/m
48	48	201	WB	-1.44	-1.13	-1.34
48	48	202	WB	-1.32	-0.73	-1.22
48	48	179	WB	1.47	0.11	-1.56
48	48	241	WB	1.35	-0.29	-1.68
49	49	202	DEAD	-7.18	-119.43	-9.16
49	49	203	DEAD	14.01	-48.78	1.91
49	49	367	DEAD	-88.77	-79.61	53.
49	49	179	DEAD	-109.97	-150.26	41.93
49	49	202	LIVE	-18.82	-104.06	-22.88
49	49	203	LIVE	-1.95	-47.84	-13.42
49	49	367	LIVE	-65.11	-66.78	28.66
49	49	179	LIVE	-81.97	-123.	19.2
49	49	202	SX	32.19	42.36	25.13
49	49	203	SX	22.91	18.66	19.09
49	49	367	SX	203.05	82.79	45.17
49	49	179	SX	198.42	77.05	63.51
49	49	202	SY	40.82	94.83	15.41
49	49	203	SY	23.96	26.49	64.12
49	49	367	SY	102.86	51.3	60.97
49	49	179	SY	109.01	105.54	30.86
49	49	202	WB	-1.4	-0.76	-1.68
49	49	203	WB	-1.47	-0.99	-1.7
49	49	367	WB	0.7	-0.34	-1.61
49	49	179	WB	0.77	-0.1	-1.59
50	50	203	DEAD	-58.98	-70.68	-15.39
50	50	204	DEAD	-54.16	-54.61	-49.48
50	50	368	DEAD	-65.41	-57.99	-47.64
50	50	242	DEAD	-70.23	-74.05	-13.55
50	50	203	LIVE	-66.67	-67.37	-30.51
50	50	204	LIVE	-60.01	-45.17	-65.35
50	50	368	LIVE	-53.03	-43.08	-60.86
50	50	242	LIVE	-59.69	-65.28	-26.01
50	50	203	SX	11.86	19.34	22.1
50	50	204	SX	14.3	98.57	43.81
50	50	368	SX	139.13	134.69	41.66
50	50	242	SX	117.23	57.	28.47
50	50	203	SY	9.05	23.59	67.54
50	50	204	SY	26.06	113.52	20.92
50	50	368	SY	88.47	129.26	23.14
50	50	242	SY	68.05	42.17	72.18
50	50	203	WB	-1.95	-1.14	-2.05
50	50	204	WB	-1.75	-0.47	-2.6
50	50	368	WB	-7.193E-02	3.643E-02	-2.34
50	50	242	WB	-0.28	-0.64	-1.79
51	51	204	DEAD	-66.89	-58.76	-34.63
51	51	205	DEAD	-58.17	-29.68	-24.1
51	51	369	DEAD	-59.25	-30.01	-34.52
51	51	243	DEAD	-67.97	-59.08	-45.05
51	51	204	LIVE	-71.33	-48.96	-53.66
51	51	205	LIVE	-65.68	-30.11	-43.04
51	51	369	LIVE	-47.38	-24.62	-55.73
51	51	243	LIVE	-53.04	-43.47	-66.35
51	51	204	SX	12.28	98.31	70.31
51	51	205	SX	10.05	33.65	78.36

Table 31: Element Forces - Area Shells, Part 1 of 2

Area	AreaElem	Joint	OutputCase	F11	F22	F12
				Kgf/m	Kgf/m	Kgf/m
51	51	369	SX	88.61	55.45	94.45
51	51	243	SX	110.57	126.22	86.49
51	51	204	SY	16.54	111.07	26.18
51	51	205	SY	7.97	61.82	38.39
51	51	369	SY	42.09	67.92	39.42
51	51	243	SY	58.18	120.55	31.94
51	51	204	WB	-1.8	-0.5	-2.55
51	51	205	WB	-1.9	-0.82	-2.29
51	51	369	WB	8.205E-02	-0.23	-2.76
51	51	243	WB	0.18	9.734E-02	-3.02
52	52	205	DEAD	-44.88	-25.99	-29.39
52	52	206	DEAD	-47.74	-35.51	-34.85
52	52	370	DEAD	-75.94	-43.97	-34.97
52	52	244	DEAD	-73.08	-34.45	-29.51
52	52	205	LIVE	-49.78	-25.75	-49.64
52	52	206	LIVE	-55.33	-44.24	-53.75
52	52	370	LIVE	-62.29	-46.33	-55.47
52	52	244	LIVE	-56.74	-27.84	-51.36
52	52	205	SX	8.72	36.96	96.87
52	52	206	SX	7.01	32.87	77.73
52	52	370	SX	54.	20.48	83.09
52	52	244	SX	69.03	50.28	102.05
52	52	205	SY	8.63	63.72	50.52
52	52	206	SY	8.37	34.81	35.11
52	52	370	SY	24.6	32.73	38.44
52	52	244	SY	35.3	67.5	51.76
52	52	205	WB	-1.42	-0.7	-2.47
52	52	206	WB	-1.73	-1.73	-2.43
52	52	370	WB	6.507E-02	-1.19	-2.63
52	52	244	WB	0.38	-0.16	-2.67
53	53	206	DEAD	-15.21	-26.04	-25.75
53	53	207	DEAD	-14.73	-24.46	-37.93
53	53	371	DEAD	-102.28	-50.73	-57.7
53	53	245	DEAD	-102.76	-52.31	-45.52
53	53	206	LIVE	-21.24	-34.45	-44.3
53	53	207	LIVE	-23.64	-42.46	-51.78
53	53	371	LIVE	-86.18	-61.23	-72.46
53	53	245	LIVE	-83.78	-53.22	-64.98
53	53	206	SX	18.38	27.81	84.82
53	53	207	SX	10.51	55.46	82.78
53	53	371	SX	12.29	60.05	88.52
53	53	245	SX	10.85	32.29	90.79
53	53	206	SY	8.3	34.59	42.2
53	53	207	SY	14.98	42.9	52.21
53	53	371	SY	5.84	40.65	54.12
53	53	245	SY	17.72	37.99	43.87
53	53	206	WB	-1.	-1.53	-2.17
53	53	207	WB	-1.26	-2.42	-1.96
53	53	371	WB	3.299E-03	-2.04	-2.47
53	53	245	WB	0.27	-1.15	-2.67
54	54	255	DEAD	10.81	-8.12	5.19
54	54	261	DEAD	13.75	1.66	16.05
54	54	252	DEAD	-44.05	-15.68	29.22
54	54	156	DEAD	-46.98	-25.46	18.36

Table 31: Element Forces - Area Shells, Part 1 of 2

Area	AreaElem	Joint	OutputCase	F11	F22	F12
				Kgf/m	Kgf/m	Kgf/m
54	54	255	LIVE	11.39	0.83	-0.85
54	54	261	LIVE	12.33	3.97	14.02
54	54	252	LIVE	-40.53	-11.89	25.87
54	54	156	LIVE	-41.47	-15.03	11.
54	54	255	SX	47.37	56.04	29.12
54	54	261	SX	31.41	6.57	20.94
54	54	252	SX	59.38	32.77	12.01
54	54	156	SX	43.93	36.27	39.29
54	54	255	SY	35.36	146.03	115.14
54	54	261	SY	19.	10.86	40.89
54	54	252	SY	58.07	22.63	36.25
54	54	156	SY	32.27	136.01	108.59
54	54	255	WB	6.449E-02	0.52	-0.6
54	54	261	WB	-1.497E-02	0.26	0.12
54	54	252	WB	-0.25	0.19	0.28
54	54	156	WB	-0.17	0.45	-0.44
55	55	256	DEAD	-37.62	-5.71	-45.93
55	55	258	DEAD	-31.28	15.43	-9.16
55	55	262	DEAD	-9.57	21.94	14.91
55	55	261	DEAD	-15.9	0.8	-21.87
55	55	256	LIVE	-32.17	-0.15	-53.81
55	55	258	LIVE	-23.94	27.33	-4.07
55	55	262	LIVE	-5.9	32.74	21.96
55	55	261	LIVE	-14.13	5.27	-27.78
55	55	256	SX	24.75	27.5	62.86
55	55	258	SX	38.99	79.31	22.64
55	55	262	SX	24.6	62.87	54.84
55	55	261	SX	38.16	13.4	39.41
55	55	256	SY	92.66	86.86	202.29
55	55	258	SY	118.37	179.14	17.88
55	55	262	SY	10.39	146.29	76.89
55	55	261	SY	25.65	53.24	145.
55	55	256	WB	0.36	0.64	-1.86
55	55	258	WB	0.72	1.88	0.4
55	55	262	WB	4.829E-02	1.67	1.13
55	55	261	WB	-0.32	0.44	-1.13
56	56	262	DEAD	-24.85	-4.35	-0.94
56	56	263	DEAD	-27.67	-13.73	8.58
56	56	254	DEAD	-17.8	-10.77	12.91
56	56	253	DEAD	-14.99	-1.39	3.39
56	56	262	LIVE	-24.16	-4.64	0.71
56	56	263	LIVE	-25.19	-8.04	12.24
56	56	254	LIVE	-16.21	-5.35	12.04
56	56	253	LIVE	-15.19	-1.95	0.51
56	56	262	SX	21.34	2.9	16.73
56	56	263	SX	27.31	22.08	19.21
56	56	254	SX	13.18	13.78	11.93
56	56	253	SX	16.99	10.76	29.73
56	56	262	SY	27.	2.21	23.17
56	56	263	SY	21.86	31.88	64.02
56	56	254	SY	54.41	21.33	27.78
56	56	253	SY	62.86	13.58	56.47
56	56	262	WB	-0.58	-0.12	0.18
56	56	263	WB	-0.45	0.3	0.62

Table 31: Element Forces - Area Shells, Part 1 of 2

Area	AreaElem	Joint	OutputCase	F11	F22	F12
				Kgf/m	Kgf/m	Kgf/m
56	56	254	WB	5.921E-02	0.45	0.24
56	56	253	WB	-6.633E-02	3.309E-02	-0.2
57	57	259	DEAD	-46.01	-16.9	19.24
57	57	159	DEAD	-62.46	-71.72	29.14
57	57	260	DEAD	-11.58	-56.46	30.7
57	57	263	DEAD	4.87	-1.63	20.81
57	57	259	LIVE	-36.72	-16.45	25.25
57	57	159	LIVE	-49.58	-59.31	28.23
57	57	260	LIVE	-9.49	-47.29	23.58
57	57	263	LIVE	3.38	-4.42	20.6
57	57	259	SX	103.83	20.47	68.68
57	57	159	SX	121.6	85.91	24.83
57	57	260	SX	12.25	54.29	28.26
57	57	263	SX	21.22	17.04	71.02
57	57	259	SY	59.98	9.75	96.95
57	57	159	SY	54.48	62.78	41.1
57	57	260	SY	28.61	72.59	33.88
57	57	263	SY	13.65	12.64	49.75
57	57	259	WB	0.45	-0.21	1.13
57	57	159	WB	0.42	-0.33	0.51
57	57	260	WB	-0.21	-0.52	-0.17
57	57	263	WB	-0.18	-0.4	0.45
58	58	157	DEAD	-66.09	-42.67	-26.3
58	58	256	DEAD	-56.72	-11.44	-34.91
58	58	261	DEAD	16.4	10.49	-25.83
58	58	255	DEAD	7.03	-20.74	-17.22
58	58	157	LIVE	-61.02	-37.75	-17.65
58	58	256	LIVE	-51.48	-5.94	-35.77
58	58	261	LIVE	15.38	14.12	-32.25
58	58	255	LIVE	5.83	-17.69	-14.13
58	58	157	SX	46.86	27.76	28.97
58	58	256	SX	57.8	36.55	36.98
58	58	261	SX	31.31	15.27	42.43
58	58	255	SX	42.27	40.23	19.42
58	58	157	SY	24.95	124.12	27.74
58	58	256	SY	84.11	84.44	136.81
58	58	261	SY	13.03	59.86	164.46
58	58	255	SY	62.02	148.28	45.2
58	58	157	WB	-0.26	-0.43	0.45
58	58	256	WB	3.480E-02	0.55	-0.87
58	58	261	WB	7.525E-02	0.56	-1.29
58	58	255	WB	-0.22	-0.42	3.020E-02
59	59	261	DEAD	-18.56	-8.03	20.01
59	59	262	DEAD	-16.72	-1.91	-0.59
59	59	253	DEAD	-24.54	-4.25	1.56
59	59	252	DEAD	-26.38	-10.38	22.16
59	59	261	LIVE	-17.18	-4.88	18.49
59	59	262	LIVE	-16.41	-2.31	-3.14
59	59	253	LIVE	-23.94	-4.57	0.31
59	59	252	LIVE	-24.72	-7.14	21.94
59	59	261	SX	38.62	4.3	22.67
59	59	262	SX	40.74	3.48	23.92
59	59	253	SX	28.91	16.96	31.75
59	59	252	SX	30.79	23.99	9.04

Table 31: Element Forces - Area Shells, Part 1 of 2

Area	AreaElem	Joint	OutputCase	F11	F22	F12
				Kgf/m	Kgf/m	Kgf/m
59	59	261	SY	39.27	7.8	26.77
59	59	262	SY	40.85	4.26	63.75
59	59	253	SY	55.09	12.39	47.61
59	59	252	SY	55.47	19.13	20.02
59	59	261	WB	-0.41	0.14	0.28
59	59	262	WB	-0.48	-9.141E-02	-0.28
59	59	253	WB	-0.19	-3.289E-03	-0.12
59	59	252	WB	-0.12	0.23	0.44
60	60	263	DEAD	4.09	-4.2	19.34
60	60	260	DEAD	-13.25	-62.03	-16.12
60	60	158	DEAD	-39.36	-69.86	-38.85
60	60	254	DEAD	-22.02	-12.04	-3.4
60	60	263	LIVE	5.01	1.02	18.68
60	60	260	LIVE	-11.73	-54.77	-10.15
60	60	158	LIVE	-35.33	-61.85	-28.05
60	60	254	LIVE	-18.59	-6.06	0.78
60	60	263	SX	14.76	14.45	41.11
60	60	260	SX	23.15	41.87	7.76
60	60	158	SX	38.85	32.82	57.75
60	60	254	SX	47.1	23.64	23.87
60	60	263	SY	9.49	36.26	54.91
60	60	260	SY	29.17	106.14	43.91
60	60	158	SY	32.33	89.38	73.97
60	60	254	SY	52.86	23.39	78.
60	60	263	WB	7.891E-02	0.46	0.39
60	60	260	WB	-0.32	-0.86	0.36
60	60	158	WB	-0.16	-0.81	0.38
60	60	254	WB	0.24	0.51	0.41
61	61	258	DEAD	-24.19	17.55	11.51
61	61	259	DEAD	-33.38	-13.11	7.01
61	61	263	DEAD	-26.9	-11.16	10.05
61	61	262	DEAD	-17.7	19.5	14.56
61	61	258	LIVE	-9.95	31.52	16.97
61	61	259	LIVE	-23.11	-12.37	5.32
61	61	263	LIVE	-26.82	-13.48	14.16
61	61	262	LIVE	-13.65	30.41	25.81
61	61	258	SX	41.87	63.21	56.98
61	61	259	SX	52.35	5.14	51.94
61	61	263	SX	21.08	6.01	46.23
61	61	262	SX	12.51	68.59	57.72
61	61	258	SY	103.92	172.24	61.62
61	61	259	SY	64.67	10.72	22.59
61	61	263	SY	31.47	16.67	57.17
61	61	262	SY	24.4	151.05	127.89
61	61	258	WB	1.45	2.1	0.84
61	61	259	WB	0.79	-0.11	-5.890E-02
61	61	263	WB	-0.71	-0.56	0.69
61	61	262	WB	-4.931E-02	1.65	1.59
62	62	247	DEAD	43.24	81.91	23.
62	62	180	DEAD	-5.98	-82.14	24.45
62	62	159	DEAD	-65.43	-99.97	-43.45
62	62	257	DEAD	-16.21	64.07	-44.91
62	62	247	LIVE	76.22	109.28	56.06
62	62	180	LIVE	26.65	-55.96	62.6

Table 31: Element Forces - Area Shells, Part 1 of 2

Area	AreaElem	Joint	OutputCase	F11	F22	F12
				Kgf/m	Kgf/m	Kgf/m
62	62	159	LIVE	-48.22	-78.42	-24.79
62	62	257	LIVE	1.35	86.82	-31.34
62	62	247	SX	39.96	128.12	16.88
62	62	180	SX	23.48	82.79	29.14
62	62	159	SX	102.52	106.16	106.91
62	62	257	SX	48.72	107.94	117.89
62	62	247	SY	61.42	205.62	75.61
62	62	180	SY	22.47	138.94	114.11
62	62	159	SY	103.61	168.35	108.91
62	62	257	SY	104.21	219.49	137.1
62	62	247	WB	4.61	4.75	4.01
62	62	180	WB	3.51	1.1	4.64
62	62	159	WB	0.86	0.31	1.03
62	62	257	WB	1.96	3.96	0.4
63	63	283	DEAD	-32.31	-10.81	9.15
63	63	282	DEAD	-36.94	-12.2	8.83
63	63	280	DEAD	-36.79	-12.12	5.46
63	63	281	DEAD	-32.23	-10.75	5.78
63	63	283	LIVE	-17.08	-8.95	14.39
63	63	282	LIVE	-19.77	-9.75	13.86
63	63	280	LIVE	-20.74	-13.04	11.8
63	63	281	LIVE	-18.1	-12.25	12.32
63	63	283	SX	77.81	7.04	17.31
63	63	282	SX	78.53	23.72	51.23
63	63	280	SX	78.62	24.73	74.47
63	63	281	SX	77.49	6.61	37.37
63	63	283	SY	150.6	22.23	55.19
63	63	282	SY	109.8	56.72	55.61
63	63	280	SY	106.96	52.46	76.75
63	63	281	SY	153.04	30.22	72.32
63	63	283	WB	0.73	-9.329E-02	0.46
63	63	282	WB	0.76	-8.410E-02	0.36
63	63	280	WB	0.66	-0.38	0.42
63	63	281	WB	0.63	-0.39	0.52
64	64	373	DEAD	-69.83	-52.35	-27.74
64	64	244	DEAD	-69.37	-50.81	-32.45
64	64	354	DEAD	-10.13	-33.04	-11.39
64	64	353	DEAD	-10.59	-34.57	-6.68
64	64	373	LIVE	-54.82	-36.96	-55.99
64	64	244	LIVE	-58.72	-49.96	-55.1
64	64	354	LIVE	16.39	-27.43	-27.72
64	64	353	LIVE	20.29	-14.41	-28.61
64	64	373	SX	112.89	142.71	125.44
64	64	244	SX	74.09	47.07	55.6
64	64	354	SX	199.98	51.62	23.09
64	64	353	SX	237.55	173.22	52.9
64	64	373	SY	74.54	191.5	45.57
64	64	244	SY	47.07	111.93	51.87
64	64	354	SY	94.63	83.7	44.85
64	64	353	SY	95.43	167.22	24.25
64	64	373	WB	0.13	0.12	-3.38
64	64	244	WB	-0.25	-1.15	-3.1
64	64	354	WB	2.31	-0.38	-2.2
64	64	353	WB	2.69	0.88	-2.48

Table 31: Element Forces - Area Shells, Part 1 of 2

Area	AreaElem	Joint	OutputCase	F11	F22	F12
				Kgf/m	Kgf/m	Kgf/m
65	65	374	DEAD	-82.77	-54.59	-24.27
65	65	245	DEAD	-78.01	-38.75	-9.25
65	65	355	DEAD	-17.17	-20.49	-2.42
65	65	354	DEAD	-21.92	-36.33	-17.43
65	65	374	LIVE	-67.77	-52.28	-46.54
65	65	245	LIVE	-65.99	-46.38	-32.96
65	65	355	LIVE	-1.14	-26.92	-21.7
65	65	354	LIVE	-2.91	-32.82	-35.28
65	65	374	SX	51.95	47.35	50.95
65	65	245	SX	45.71	42.48	24.76
65	65	355	SX	108.26	31.02	32.24
65	65	354	SX	113.86	45.07	6.79
65	65	374	SY	38.49	110.39	43.39
65	65	245	SY	23.78	62.75	27.49
65	65	355	SY	42.29	53.72	48.13
65	65	354	SY	41.61	100.78	15.01
65	65	374	WB	5.144E-02	-1.03	-2.87
65	65	245	WB	-0.14	-1.67	-2.73
65	65	355	WB	1.21	-1.27	-2.29
65	65	354	WB	1.4	-0.63	-2.42
66	66	375	DEAD	-106.33	-47.19	-16.8
66	66	246	DEAD	-108.03	-52.94	16.52
66	66	356	DEAD	-12.01	-24.15	31.78
66	66	355	DEAD	-10.28	-18.39	-1.53
66	66	375	LIVE	-88.24	-52.81	-39.11
66	66	246	LIVE	-94.88	-75.	-9.75
66	66	356	LIVE	-7.31	-48.75	9.53
66	66	355	LIVE	-0.65	-26.53	-19.81
66	66	375	SX	14.91	54.95	26.63
66	66	246	SX	27.3	105.36	11.73
66	66	356	SX	40.66	85.93	39.36
66	66	355	SX	58.77	40.21	24.34
66	66	375	SY	26.2	68.12	40.71
66	66	246	SY	10.7	77.96	27.22
66	66	356	SY	16.86	74.79	17.45
66	66	355	SY	25.35	62.81	23.54
66	66	375	WB	0.12	-1.57	-2.66
66	66	246	WB	-0.36	-3.15	-2.57
66	66	356	WB	0.27	-2.96	-2.1
66	66	355	WB	0.74	-1.38	-2.2
67	67	359	DEAD	4.42	2.53	20.67
67	67	353	DEAD	-3.22	-22.88	11.35
67	67	284	DEAD	-34.09	-32.14	16.96
67	67	358	DEAD	-26.48	-6.74	26.27
67	67	359	LIVE	44.31	28.82	-4.34
67	67	353	LIVE	34.75	-2.76	9.49
67	67	284	LIVE	-16.97	-18.28	44.23
67	67	358	LIVE	-7.37	13.31	30.38
67	67	359	SX	316.41	194.31	88.77
67	67	353	SX	288.48	126.37	58.66
67	67	284	SX	116.93	107.71	235.03
67	67	358	SX	89.68	105.83	127.06
67	67	359	SY	126.38	169.71	190.34
67	67	353	SY	110.87	200.64	28.9

Table 31: Element Forces - Area Shells, Part 1 of 2

Area	AreaElem	Joint	OutputCase	F11	F22	F12
				Kgf/m	Kgf/m	Kgf/m
67	67	284	SY	182.22	266.45	237.14
67	67	358	SY	171.34	227.31	77.05
67	67	359	WB	3.75	2.26	-2.32
67	67	353	WB	3.42	1.17	-0.29
67	67	284	WB	0.94	0.42	2.38
67	67	358	WB	1.28	1.52	0.35
68	68	353	DEAD	-7.46	-24.15	11.04
68	68	354	DEAD	-7.64	-24.74	8.67
68	68	282	DEAD	-42.78	-35.28	14.01
68	68	284	DEAD	-42.6	-34.69	16.38
68	68	353	LIVE	22.7	-6.38	12.16
68	68	354	LIVE	19.73	-16.3	1.11
68	68	282	LIVE	-24.89	-29.68	8.99
68	68	284	LIVE	-21.95	-19.77	20.04
68	68	353	SX	208.97	111.32	128.36
68	68	354	SX	212.36	92.42	105.86
68	68	282	SX	113.13	72.17	107.47
68	68	284	SX	120.84	110.75	122.37
68	68	353	SY	78.22	206.36	53.79
68	68	354	SY	92.86	109.5	77.13
68	68	282	SY	154.98	169.35	122.52
68	68	284	SY	183.77	267.67	64.53
68	68	353	WB	2.71	0.95	-0.13
68	68	354	WB	2.46	0.14	-0.96
68	68	282	WB	0.75	-0.37	-0.53
68	68	284	WB	0.99	0.44	0.3
69	69	354	DEAD	-19.52	-28.3	1.93
69	69	355	DEAD	-19.86	-29.48	-8.28
69	69	280	DEAD	-44.23	-36.79	-0.98
69	69	282	DEAD	-43.91	-35.62	9.23
69	69	354	LIVE	0.31	-22.12	-7.32
69	69	355	LIVE	-3.91	-36.2	-15.82
69	69	280	LIVE	-29.98	-44.02	-0.4
69	69	282	LIVE	-25.78	-29.95	8.09
69	69	354	SX	126.65	76.81	98.35
69	69	355	SX	110.33	13.17	70.56
69	69	280	SX	95.93	68.39	87.63
69	69	282	SX	87.76	70.84	111.12
69	69	354	SY	45.32	126.01	97.8
69	69	355	SY	50.69	25.83	40.22
69	69	280	SY	106.23	55.7	43.
69	69	282	SY	141.67	165.98	59.7
69	69	354	WB	1.55	-0.13	-1.24
69	69	355	WB	1.2	-1.3	-1.37
69	69	280	WB	0.31	-1.57	-0.45
69	69	282	WB	0.66	-0.4	-0.32
70	70	355	DEAD	-13.	-27.42	-4.02
70	70	356	DEAD	-14.47	-32.26	-15.14
70	70	278	DEAD	-50.9	-43.19	-18.88
70	70	280	DEAD	-49.46	-38.36	-7.77
70	70	355	LIVE	-3.52	-36.08	-11.16
70	70	356	LIVE	-7.73	-50.08	-22.77
70	70	278	LIVE	-39.97	-59.76	-21.64
70	70	280	LIVE	-35.79	-45.77	-10.03

Table 31: Element Forces - Area Shells, Part 1 of 2

Area	AreaElem	Joint	OutputCase	F11	F22	F12
				Kgf/m	Kgf/m	Kgf/m
70	70	355	SX	60.14	24.1	71.51
70	70	356	SX	52.61	46.44	75.63
70	70	278	SX	80.39	85.31	68.83
70	70	280	SX	73.56	61.74	64.34
70	70	355	SY	22.65	28.99	24.97
70	70	356	SY	20.55	59.98	27.85
70	70	278	SY	63.79	63.81	27.43
70	70	280	SY	71.38	47.55	26.29
70	70	355	WB	0.73	-1.44	-1.31
70	70	356	WB	0.44	-2.4	-1.47
70	70	278	WB	-0.18	-2.58	-1.01
70	70	280	WB	0.11	-1.63	-0.85
71	71	281	DEAD	-28.49	-9.63	3.74
71	71	280	DEAD	-42.03	-13.7	-1.33
71	71	278	DEAD	-42.25	-13.95	-5.61
71	71	279	DEAD	-28.8	-9.91	-0.55
71	71	281	LIVE	-9.48	-9.67	9.57
71	71	280	LIVE	-26.58	-14.8	2.17
71	71	278	LIVE	-29.76	-25.13	-5.53
71	71	279	LIVE	-12.83	-20.05	1.85
71	71	281	SX	67.51	5.19	57.31
71	71	280	SX	55.97	21.39	52.62
71	71	278	SX	68.59	43.9	31.56
71	71	279	SX	82.33	45.94	39.48
71	71	281	SY	96.55	12.87	89.38
71	71	280	SY	71.89	42.26	61.78
71	71	278	SY	61.57	28.52	57.69
71	71	279	SY	109.13	58.29	85.79
71	71	281	WB	1.01	-0.28	0.38
71	71	280	WB	0.46	-0.44	1.290E-02
71	71	278	WB	0.16	-1.44	-0.46
71	71	279	WB	0.71	-1.28	-9.644E-02
72	72	279	DEAD	-25.5	-8.89	-8.64
72	72	278	DEAD	-50.75	-16.47	-8.61
72	72	170	DEAD	-58.11	-41.	-11.13
72	72	171	DEAD	-32.9	-33.44	-11.16
72	72	279	LIVE	-9.33	-18.94	-11.13
72	72	278	LIVE	-33.77	-26.27	-9.91
72	72	170	LIVE	-42.84	-56.58	-19.8
72	72	171	LIVE	-18.61	-49.33	-21.04
72	72	279	SX	68.23	44.33	40.86
72	72	278	SX	70.75	44.08	49.38
72	72	170	SX	63.94	31.62	88.33
72	72	171	SX	60.15	30.65	56.58
72	72	279	SY	51.89	43.13	79.5
72	72	278	SY	40.74	25.71	79.18
72	72	170	SY	35.25	51.96	101.23
72	72	171	SY	53.02	65.92	94.65
72	72	279	WB	0.61	-1.3	-0.79
72	72	278	WB	0.51	-1.33	-0.64
72	72	170	WB	9.455E-02	-2.72	-1.47
72	72	171	WB	0.18	-2.69	-1.62
73	73	359	DEAD	1.96	-6.43	-10.29
73	73	360	DEAD	-44.44	-20.04	5.1

Table 31: Element Forces - Area Shells, Part 1 of 2

Area	AreaElem	Joint	OutputCase	F11	F22	F12
				Kgf/m	Kgf/m	Kgf/m
73	73	243	DEAD	-52.79	-47.33	9.96
73	73	353	DEAD	-6.27	-33.49	-5.56
73	73	359	LIVE	42.46	21.84	-21.37
73	73	360	LIVE	-31.03	-4.068E-02	-20.87
73	73	243	LIVE	-40.94	-32.96	-30.31
73	73	353	LIVE	32.43	-11.1	-30.99
73	73	359	SX	317.55	184.09	13.51
73	73	360	SX	86.25	117.7	90.43
73	73	243	SX	89.1	135.64	204.85
73	73	353	SX	317.47	194.82	125.46
73	73	359	SY	143.09	80.16	36.24
73	73	360	SY	34.61	88.59	62.87
73	73	243	SY	48.64	184.39	78.19
73	73	353	SY	127.98	164.04	63.52
73	73	359	WB	3.82	2.48	-1.51
73	73	360	WB	0.59	1.51	-2.48
73	73	243	WB	0.19	0.12	-3.64
73	73	353	WB	3.4	1.08	-2.68
75	75	182	DEAD	-21.86	-2.94	39.2
75	75	265	DEAD	-28.5	-25.07	32.07
75	75	334	DEAD	-13.75	-20.65	24.54
75	75	183	DEAD	-7.11	1.48	31.66
75	75	182	LIVE	2.62	-3.35	54.71
75	75	265	LIVE	-3.76	-24.63	43.2
75	75	334	LIVE	-9.87	-26.46	31.42
75	75	183	LIVE	-3.49	-5.18	42.93
75	75	182	SX	56.73	1.75	54.25
75	75	265	SX	60.99	17.04	45.43
75	75	334	SX	28.91	7.89	53.49
75	75	183	SX	31.12	20.22	61.44
75	75	182	SY	58.13	5.88	88.24
75	75	265	SY	56.88	11.69	73.55
75	75	334	SY	53.5	26.83	35.94
75	75	183	SY	51.46	16.14	50.15
75	75	182	WB	1.99	-0.1	2.42
75	75	265	WB	1.89	-0.43	1.82
75	75	334	WB	-0.3	-1.09	1.26
75	75	183	WB	-0.2	-0.76	1.86
76	76	265	DEAD	-24.54	-23.88	8.69
76	76	266	DEAD	-18.8	-4.75	-2.86
76	76	335	DEAD	6.49	2.84	2.77
76	76	334	DEAD	0.75	-16.3	14.31
76	76	265	LIVE	-3.87	-24.66	13.38
76	76	266	LIVE	3.83	1.02	2.97
76	76	335	LIVE	19.3	5.67	9.28
76	76	334	LIVE	11.6	-20.02	19.69
76	76	265	SX	27.93	6.43	44.32
76	76	266	SX	29.45	10.81	56.02
76	76	335	SX	77.1	21.46	74.13
76	76	334	SX	76.71	20.31	63.21
76	76	265	SY	55.27	9.69	29.06
76	76	266	SY	62.43	22.14	25.75
76	76	335	SY	96.92	33.23	58.42
76	76	334	SY	96.	37.05	72.84

Table 31: Element Forces - Area Shells, Part 1 of 2

Area	AreaElem	Joint	OutputCase	F11	F22	F12
				Kgf/m	Kgf/m	Kgf/m
76	76	265	WB	1.51	-0.55	0.7
76	76	266	WB	1.81	0.47	0.55
76	76	335	WB	1.06	0.25	0.74
76	76	334	WB	0.76	-0.77	0.89
77	77	266	DEAD	-19.54	-4.97	4.84
77	77	267	DEAD	-18.5	-1.53	5.17
77	77	347	DEAD	8.65	6.61	-0.74
77	77	335	DEAD	7.62	3.18	-1.06
77	77	266	LIVE	2.68	0.68	13.35
77	77	267	LIVE	2.49	2.652E-02	13.62
77	77	347	LIVE	25.3	6.87	6.74
77	77	335	LIVE	25.5	7.52	6.47
77	77	266	SX	26.37	13.99	60.92
77	77	267	SX	26.	19.83	80.53
77	77	347	SX	152.14	35.76	85.89
77	77	335	SX	154.66	42.83	84.55
77	77	266	SY	53.99	20.96	98.21
77	77	267	SY	48.65	42.35	203.78
77	77	347	SY	148.37	78.25	72.06
77	77	335	SY	141.1	46.01	66.34
77	77	266	WB	1.72	0.45	0.95
77	77	267	WB	1.63	0.13	0.96
77	77	347	WB	1.54	0.11	0.75
77	77	335	WB	1.63	0.42	0.74
78	78	267	DEAD	-13.49	-2.744E-02	0.59
78	78	268	DEAD	-17.24	-12.51	8.52
78	78	349	DEAD	9.37	-4.53	9.98
78	78	347	DEAD	13.12	7.96	2.05
78	78	267	LIVE	3.37	0.29	8.44
78	78	268	LIVE	-1.07	-14.51	16.18
78	78	349	LIVE	34.86	-3.73	17.38
78	78	347	LIVE	39.31	11.07	9.64
78	78	267	SX	32.5	24.22	71.68
78	78	268	SX	36.55	52.99	103.37
78	78	349	SX	139.42	72.12	106.17
78	78	347	SX	131.41	33.	93.26
78	78	267	SY	45.66	33.18	128.42
78	78	268	SY	44.64	201.19	144.65
78	78	349	SY	229.69	257.24	61.95
78	78	347	SY	184.56	89.48	228.93
78	78	267	WB	1.28	2.986E-02	0.83
78	78	268	WB	1.15	-0.39	0.92
78	78	349	WB	2.55	3.271E-02	0.91
78	78	347	WB	2.68	0.45	0.82
79	79	268	DEAD	-14.65	-11.73	19.04
79	79	269	DEAD	-15.45	-14.4	8.44
79	79	336	DEAD	20.23	-3.7	-5.14
79	79	349	DEAD	21.03	-1.03	5.47
79	79	268	LIVE	1.09	-13.86	26.51
79	79	269	LIVE	-1.03	-20.93	12.25
79	79	336	LIVE	56.48	-3.68	-2.54
79	79	349	LIVE	58.6	3.39	11.72
79	79	268	SX	20.05	48.66	116.54
79	79	269	SX	14.09	17.58	81.72

Table 31: Element Forces - Area Shells, Part 1 of 2

Area	AreaElem	Joint	OutputCase	F11	F22	F12
				Kgf/m	Kgf/m	Kgf/m
79	79	336	SX	184.32	41.92	97.8
79	79	349	SX	198.15	94.34	121.41
79	79	268	SY	40.2	191.95	258.01
79	79	269	SY	69.66	20.28	115.34
79	79	336	SY	192.97	88.91	72.5
79	79	349	SY	242.92	263.33	97.78
79	79	268	WB	1.03	-0.43	1.04
79	79	269	WB	0.86	-0.96	0.57
79	79	336	WB	4.17	2.774E-02	0.28
79	79	349	WB	4.33	0.57	0.76
80	80	269	DEAD	-9.48	-12.62	-10.34
80	80	270	DEAD	-7.27	-5.24	-13.02
80	80	337	DEAD	18.68	2.55	-6.69
80	80	336	DEAD	16.47	-4.83	-4.
80	80	269	LIVE	4.8	-19.18	-12.08
80	80	270	LIVE	8.33	-7.4	-17.43
80	80	337	LIVE	56.77	7.13	-10.02
80	80	336	LIVE	53.23	-4.65	-4.67
80	80	269	SX	64.12	6.67	78.55
80	80	270	SX	70.02	34.64	85.6
80	80	337	SX	114.54	58.74	110.52
80	80	336	SX	103.82	27.31	120.07
80	80	269	SY	96.36	15.92	72.79
80	80	270	SY	89.13	55.91	168.83
80	80	337	SY	223.37	139.49	59.33
80	80	336	SY	207.86	92.51	71.49
80	80	269	WB	0.87	-0.96	-0.25
80	80	270	WB	1.02	-0.47	-0.6
80	80	337	WB	4.39	0.55	-0.39
80	80	336	WB	4.24	4.925E-02	-4.651E-02
81	81	270	DEAD	-3.84	-4.21	-7.41
81	81	271	DEAD	-4.23	-5.5	-4.61
81	81	341	DEAD	13.45	-0.2	-11.99
81	81	337	DEAD	13.84	1.1	-14.78
81	81	270	LIVE	16.1	-5.07	-11.77
81	81	271	LIVE	15.59	-6.76	-9.1
81	81	341	LIVE	48.11	3.	-17.58
81	81	337	LIVE	48.62	4.68	-20.25
81	81	270	SX	114.91	45.9	75.55
81	81	271	SX	108.58	39.51	103.52
81	81	341	SX	130.38	68.54	112.2
81	81	337	SX	131.16	63.5	107.
81	81	270	SY	93.9	56.64	100.81
81	81	271	SY	78.56	109.95	117.84
81	81	341	SY	279.67	207.78	47.92
81	81	337	SY	263.94	151.97	225.96
81	81	270	WB	1.46	-0.33	-0.56
81	81	271	WB	1.49	-0.25	-0.55
81	81	341	WB	3.85	0.46	-0.75
81	81	337	WB	3.82	0.37	-0.77
82	82	271	DEAD	-0.54	-4.4	-5.28
82	82	272	DEAD	0.21	-1.89	-4.74
82	82	339	DEAD	20.13	4.08	-4.49
82	82	341	DEAD	19.38	1.58	-5.02

Table 31: Element Forces - Area Shells, Part 1 of 2

Area	AreaElem	Joint	OutputCase	F11	F22	F12
				Kgf/m	Kgf/m	Kgf/m
82	82	271	LIVE	19.24	-5.67	-9.83
82	82	272	LIVE	20.52	-1.41	-9.61
82	82	339	LIVE	54.7	8.84	-9.99
82	82	341	LIVE	53.42	4.59	-10.21
82	82	271	SX	85.62	41.43	114.73
82	82	272	SX	75.75	27.01	76.8
82	82	339	SX	341.64	59.23	89.96
82	82	341	SX	354.65	109.37	124.22
82	82	271	SY	54.13	123.99	151.01
82	82	272	SY	83.53	68.61	70.41
82	82	339	SY	252.92	29.31	40.72
82	82	341	SY	306.07	212.81	105.25
82	82	271	WB	1.67	-0.19	-0.57
82	82	272	WB	1.73	2.384E-03	-0.63
82	82	339	WB	3.31	0.47	-0.66
82	82	341	WB	3.25	0.28	-0.6
83	83	272	DEAD	2.95	-1.07	-2.71
83	83	273	DEAD	3.72	1.51	-1.76
83	83	343	DEAD	16.03	5.2	-5.17
83	83	339	DEAD	15.25	2.62	-6.12
83	83	272	LIVE	25.45	6.782E-02	-8.82
83	83	273	LIVE	26.23	2.67	-7.11
83	83	343	LIVE	45.91	8.57	-9.15
83	83	339	LIVE	45.13	5.97	-10.86
83	83	272	SX	128.57	16.03	85.64
83	83	273	SX	129.45	2.69	92.48
83	83	343	SX	237.31	32.62	102.2
83	83	339	SX	235.56	26.76	94.54
83	83	272	SY	51.93	50.89	52.8
83	83	273	SY	51.44	8.25	75.63
83	83	343	SY	198.22	46.8	110.7
83	83	339	SY	186.49	12.22	86.21
83	83	272	WB	1.99	8.123E-02	-0.68
83	83	273	WB	2.02	0.17	-0.57
83	83	343	WB	2.75	0.39	-0.52
83	83	339	WB	2.73	0.3	-0.63
84	84	273	DEAD	1.58	0.87	-5.71
84	84	274	DEAD	2.58	4.21	-6.82
84	84	345	DEAD	14.47	7.77	1.05
84	84	343	DEAD	13.47	4.44	2.17
84	84	273	LIVE	26.7	2.81	-9.3
84	84	274	LIVE	26.99	3.78	-12.8
84	84	345	LIVE	39.31	7.47	-5.67
84	84	343	LIVE	39.02	6.51	-2.17
84	84	273	SX	171.74	12.4	90.01
84	84	274	SX	171.46	13.53	97.65
84	84	345	SX	134.05	21.27	116.
84	84	343	SX	133.25	10.62	108.13
84	84	273	SY	62.74	5.95	115.82
84	84	274	SY	65.45	23.46	102.95
84	84	345	SY	128.95	50.52	79.43
84	84	343	SY	121.67	23.72	91.21
84	84	273	WB	2.22	0.23	-0.5
84	84	274	WB	2.16	2.771E-02	-0.76

Table 31: Element Forces - Area Shells, Part 1 of 2

Area	AreaElem	Joint	OutputCase	F11	F22	F12
				Kgf/m	Kgf/m	Kgf/m
84	84	345	WB	2.2	4.102E-02	-0.65
84	84	343	WB	2.26	0.24	-0.39
85	85	250	DEAD	-21.78	-34.41	28.19
85	85	251	DEAD	-11.92	-1.56	4.35
85	85	270	DEAD	-5.6	0.34	-18.35
85	85	269	DEAD	-15.45	-32.52	5.48
85	85	250	LIVE	-17.43	-49.61	36.32
85	85	251	LIVE	-4.95	-8.02	16.5
85	85	270	LIVE	9.44	-3.7	-18.36
85	85	269	LIVE	-3.04	-45.29	1.46
85	85	250	SX	39.13	95.84	38.64
85	85	251	SX	26.33	45.64	36.03
85	85	270	SX	71.2	47.52	35.19
85	85	269	SX	72.56	93.37	54.3
85	85	250	SY	105.34	344.53	126.35
85	85	251	SY	41.14	110.99	156.02
85	85	270	SY	82.76	83.57	69.7
85	85	269	SY	35.78	313.68	117.22
85	85	250	WB	1.291E-02	-2.05	1.11
85	85	251	WB	0.41	-0.72	1.08
85	85	270	WB	1.	-0.54	-0.37
85	85	269	WB	0.6	-1.87	-0.34
86	86	248	DEAD	-14.32	-52.67	46.79
86	86	249	DEAD	1.41	-0.23	43.17
86	86	266	DEAD	-19.31	-6.45	1.43
86	86	265	DEAD	-35.04	-58.88	5.06
86	86	248	LIVE	-7.57	-61.95	63.68
86	86	249	LIVE	11.14	0.4	57.65
86	86	266	LIVE	2.9	-2.07	9.65
86	86	265	LIVE	-15.8	-64.42	15.68
86	86	248	SX	26.77	17.82	58.06
86	86	249	SX	26.79	35.36	67.72
86	86	266	SX	36.24	39.64	40.49
86	86	265	SX	30.49	15.99	41.16
86	86	248	SY	16.4	34.7	112.95
86	86	249	SY	24.03	98.52	148.29
86	86	266	SY	58.52	98.52	91.12
86	86	265	SY	52.23	28.56	56.58
86	86	248	WB	0.41	-2.05	2.59
86	86	249	WB	1.04	3.910E-02	2.28
86	86	266	WB	1.75	0.25	0.84
86	86	265	WB	1.12	-1.83	1.15
87	87	181	DEAD	0.63	1.31	59.52
87	87	380	DEAD	-10.52	-35.91	17.68
87	87	265	DEAD	-33.84	-42.88	0.66
87	87	182	DEAD	-22.68	-5.68	42.51
87	87	181	LIVE	-4.61	-4.28	68.66
87	87	380	LIVE	-17.04	-45.79	23.65
87	87	265	LIVE	-9.42	-43.48	10.13
87	87	182	LIVE	3.03	-1.98	55.14
87	87	181	SX	27.38	24.56	49.57
87	87	380	SX	23.73	10.51	13.48
87	87	265	SX	64.31	27.19	34.6
87	87	182	SX	55.82	5.13	42.41

Table 31: Element Forces - Area Shells, Part 1 of 2

Area	AreaElem	Joint	OutputCase	F11	F22	F12
				Kgf/m	Kgf/m	Kgf/m
87	87	181	SY	61.21	27.28	90.63
87	87	380	SY	49.05	30.68	16.86
87	87	265	SY	56.56	35.13	17.49
87	87	182	SY	62.12	18.95	94.35
87	87	181	WB	-0.4	-0.52	2.09
87	87	380	WB	-0.76	-1.73	1.
87	87	265	WB	1.72	-0.99	1.02
87	87	182	WB	2.08	0.22	2.11
88	88	381	DEAD	15.53	1.82	6.22
88	88	346	DEAD	17.58	8.64	14.78
88	88	267	DEAD	-18.72	-2.25	10.01
88	88	266	DEAD	-20.76	-9.07	1.45
88	88	381	LIVE	27.66	1.79	2.71
88	88	346	LIVE	30.	9.57	27.55
88	88	267	LIVE	2.91	1.44	17.27
88	88	266	LIVE	0.58	-6.32	-7.57
88	88	381	SX	25.73	21.28	21.92
88	88	346	SX	22.78	9.97	42.66
88	88	267	SX	26.34	16.99	41.11
88	88	266	SX	29.69	26.2	31.42
88	88	381	SY	70.59	47.37	50.28
88	88	346	SY	76.8	16.54	74.68
88	88	267	SY	51.4	36.96	100.74
88	88	266	SY	54.68	67.84	96.02
88	88	381	WB	1.48	-4.534E-03	-0.19
88	88	346	WB	1.57	0.28	1.55
88	88	267	WB	1.68	0.32	0.91
88	88	266	WB	1.6	3.051E-02	-0.83
89	89	346	DEAD	-8.41	0.85	5.12
89	89	348	DEAD	-7.97	2.32	6.99
89	89	268	DEAD	-13.27	0.73	7.31
89	89	267	DEAD	-13.71	-0.74	5.44
89	89	346	LIVE	-3.02	-0.33	6.24
89	89	348	LIVE	-2.62	1.01	8.31
89	89	268	LIVE	4.2	3.05	14.16
89	89	267	LIVE	3.8	1.71	12.09
89	89	346	SX	38.73	10.96	10.64
89	89	348	SX	40.55	11.02	17.63
89	89	268	SX	28.04	7.17	17.91
89	89	267	SX	26.71	11.02	28.38
89	89	346	SY	139.59	9.7	14.89
89	89	348	SY	144.24	25.59	9.7
89	89	268	SY	50.54	10.31	25.16
89	89	267	SY	48.99	26.67	34.03
89	89	346	WB	0.34	-8.344E-02	0.21
89	89	348	WB	0.35	-5.523E-02	0.25
89	89	268	WB	1.34	0.24	0.83
89	89	267	WB	1.33	0.21	0.79
90	90	348	DEAD	-21.88	-1.85	24.69
90	90	382	DEAD	-30.49	-30.6	-4.26
90	90	269	DEAD	-19.3	-27.24	-11.12
90	90	268	DEAD	-10.67	1.51	17.83
90	90	348	LIVE	-29.71	-7.13	38.25
90	90	382	LIVE	-41.46	-46.31	4.54

Table 31: Element Forces - Area Shells, Part 1 of 2

Area	AreaElem	Joint	OutputCase	F11	F22	F12
				Kgf/m	Kgf/m	Kgf/m
90	90	269	LIVE	-5.4	-35.48	-9.22
90	90	268	LIVE	6.35	3.7	24.49
90	90	348	SX	55.04	17.06	29.86
90	90	382	SX	35.7	63.64	11.72
90	90	269	SX	27.7	77.72	41.8
90	90	268	SX	15.68	2.01	28.09
90	90	348	SY	105.98	26.6	83.74
90	90	382	SY	52.98	250.65	56.14
90	90	269	SY	46.55	258.86	96.89
90	90	268	SY	75.6	3.45	120.08
90	90	348	WB	-1.1	-0.49	1.77
90	90	382	WB	-1.56	-2.02	0.73
90	90	269	WB	0.76	-1.32	-8.953E-02
90	90	268	WB	1.21	0.2	0.95
91	91	383	DEAD	2.05	2.23	1.08
91	91	352	DEAD	1.57	0.64	3.14
91	91	271	DEAD	-2.78	-0.66	-0.65
91	91	270	DEAD	-2.3	0.94	-2.72
91	91	383	LIVE	5.03	-4.	-5.44
91	91	352	LIVE	5.93	-1.01	3.42
91	91	271	LIVE	18.44	2.75	-3.01
91	91	270	LIVE	17.54	-0.23	-11.87
91	91	383	SX	40.45	20.66	32.04
91	91	352	SX	43.7	7.69	50.69
91	91	271	SX	111.55	28.34	20.56
91	91	270	SX	114.98	47.11	66.9
91	91	383	SY	176.71	35.83	102.06
91	91	352	SY	186.93	15.12	54.26
91	91	271	SY	99.66	21.2	27.4
91	91	270	SY	91.89	60.89	115.34
91	91	383	WB	5.428E-02	-0.66	-0.56
91	91	352	WB	0.2	-0.17	-0.19
91	91	271	WB	1.64	0.26	-0.34
91	91	270	WB	1.49	-0.23	-0.71
92	92	352	DEAD	-0.29	8.235E-02	1.71
92	92	338	DEAD	-0.2	0.37	0.42
92	92	272	DEAD	0.99	0.72	-2.61
92	92	271	DEAD	0.91	0.44	-1.32
92	92	352	LIVE	13.04	1.13	-0.83
92	92	338	LIVE	12.58	-0.4	-2.4
92	92	272	LIVE	21.63	2.32	-5.31
92	92	271	LIVE	22.09	3.84	-3.74
92	92	352	SX	80.47	11.03	10.57
92	92	338	SX	79.98	11.58	23.98
92	92	272	SX	85.06	17.32	43.82
92	92	271	SX	87.14	23.83	22.22
92	92	352	SY	245.97	30.29	25.04
92	92	338	SY	246.27	31.62	10.39
92	92	272	SY	63.3	31.34	56.3
92	92	271	SY	64.12	33.97	39.19
92	92	352	WB	1.05	8.488E-02	-0.25
92	92	338	WB	1.	-8.255E-02	-0.23
92	92	272	WB	1.78	0.15	-0.35
92	92	271	WB	1.83	0.32	-0.36

Table 31: Element Forces - Area Shells, Part 1 of 2

Area	AreaElem	Joint	OutputCase	F11	F22	F12
				Kgf/m	Kgf/m	Kgf/m
93	93	338	DEAD	2.27	1.11	-1.93
93	93	342	DEAD	2.11	0.56	-3.75
93	93	273	DEAD	3.57	0.99	-2.41
93	93	272	DEAD	3.73	1.55	-0.58
93	93	338	LIVE	22.5	2.58	-2.61
93	93	342	LIVE	22.2	1.58	-4.99
93	93	273	LIVE	26.27	2.8	-6.89
93	93	272	LIVE	26.57	3.8	-4.52
93	93	338	SX	99.62	14.8	32.88
93	93	342	SX	96.49	18.12	33.
93	93	273	SX	132.59	10.19	52.17
93	93	272	SX	138.83	32.77	52.14
93	93	338	SY	164.42	11.37	66.4
93	93	342	SY	178.09	53.84	67.94
93	93	273	SY	53.34	8.44	39.
93	93	272	SY	57.1	48.99	37.45
93	93	338	WB	1.87	0.18	-0.13
93	93	342	WB	1.85	9.976E-02	-0.25
93	93	273	WB	2.01	0.15	-0.51
93	93	272	WB	2.04	0.23	-0.4
94	94	342	DEAD	15.83	4.67	-5.2
94	94	344	DEAD	15.66	4.12	-4.6
94	94	274	DEAD	1.26	-0.2	-5.75
94	94	273	DEAD	1.43	0.35	-6.35
94	94	342	LIVE	42.86	7.77	-10.24
94	94	344	LIVE	42.35	6.1	-6.75
94	94	274	LIVE	26.23	1.26	-5.6
94	94	273	LIVE	26.73	2.94	-9.09
94	94	342	SX	161.04	18.27	24.02
94	94	344	SX	149.47	21.83	29.22
94	94	274	SX	163.14	16.8	57.47
94	94	273	SX	174.84	22.44	50.36
94	94	342	SY	54.	6.54	12.09
94	94	344	SY	51.16	13.9	41.74
94	94	274	SY	60.64	5.49	110.55
94	94	273	SY	64.89	10.74	79.52
94	94	342	WB	2.9	0.42	-0.66
94	94	344	WB	2.88	0.35	-0.32
94	94	274	WB	2.19	0.14	-0.1
94	94	273	WB	2.21	0.21	-0.44
98	98	183	DEAD	-34.64	-6.89	41.18
98	98	160	DEAD	-47.58	-50.04	48.45
98	98	264	DEAD	-25.22	-43.86	44.95
98	98	182	DEAD	-12.09	-8.139E-02	37.24
98	98	183	LIVE	-43.21	-16.86	57.25
98	98	160	LIVE	-52.88	-49.07	66.55
98	98	264	LIVE	7.07	-32.79	59.21
98	98	182	LIVE	17.14	0.78	48.78
98	98	183	SX	84.57	38.01	73.85
98	98	160	SX	77.44	25.03	70.77
98	98	264	SX	98.11	37.2	45.55
98	98	182	SX	92.32	11.74	46.56
98	98	183	SY	37.24	16.95	104.2
98	98	160	SY	48.55	101.69	79.7

Table 31: Element Forces - Area Shells, Part 1 of 2

Area	AreaElem	Joint	OutputCase	F11	F22	F12
				Kgf/m	Kgf/m	Kgf/m
98	98	264	SY	71.75	108.52	58.89
98	98	182	SY	50.76	5.03	80.7
98	98	183	WB	-2.09	-1.29	2.57
98	98	160	WB	-2.03	-1.09	2.99
98	98	264	WB	2.82	0.22	2.47
98	98	182	WB	2.79	0.12	1.96
99	99	181	DEAD	61.58	23.74	32.58
99	99	182	DEAD	-11.42	-1.55	39.53
99	99	264	DEAD	-26.95	-53.7	-7.52
99	99	386	DEAD	46.02	-29.42	-12.89
99	99	181	LIVE	71.15	23.47	44.27
99	99	182	LIVE	19.86	3.79	48.36
99	99	264	LIVE	1.27	-58.68	-15.22
99	99	386	LIVE	52.76	-39.52	-18.13
99	99	181	SX	77.6	43.12	61.19
99	99	182	SX	92.44	7.62	38.73
99	99	264	SX	106.85	59.67	16.19
99	99	386	SX	63.67	9.34	18.76
99	99	181	SY	76.41	24.11	117.36
99	99	182	SY	55.77	12.04	85.34
99	99	264	SY	51.45	29.89	26.24
99	99	386	SY	74.91	35.91	16.82
99	99	181	WB	2.22	0.44	1.7
99	99	182	WB	3.01	0.51	1.65
99	99	264	WB	2.32	-1.78	-0.92
99	99	386	WB	1.56	-1.84	-0.88
100	100	344	DEAD	32.84	14.6	-1.25
100	100	387	DEAD	21.59	-23.17	-2.88
100	100	275	DEAD	-4.5	-38.69	-0.65
100	100	274	DEAD	6.85	-0.64	-1.22
100	100	344	LIVE	53.47	11.76	8.91
100	100	387	LIVE	34.7	-50.9	7.47
100	100	275	LIVE	28.9	-49.91	-4.13
100	100	274	LIVE	45.51	5.54	-3.46
100	100	344	SX	176.38	40.95	63.89
100	100	387	SX	213.67	111.22	38.7
100	100	275	SX	276.59	162.73	19.67
100	100	274	SX	232.83	16.34	65.4
100	100	344	SY	278.38	113.65	176.4
100	100	387	SY	285.84	133.01	121.72
100	100	275	SY	97.99	71.4	20.45
100	100	274	SY	81.97	13.1	94.14
100	100	344	WB	2.64	7.918E-02	1.1
100	100	387	WB	1.47	-3.8	1.01
100	100	275	WB	2.87	-2.46	-0.39
100	100	274	WB	3.8	0.63	-0.21
101	101	345	DEAD	12.2	10.57	-15.81
101	101	274	DEAD	10.3	4.19	-4.7
101	101	275	DEAD	-7.22	-54.24	1.23
101	101	174	DEAD	-3.21	-40.8	-10.64
101	101	345	LIVE	26.93	7.79	-27.32
101	101	274	LIVE	47.33	8.88	-12.71
101	101	275	LIVE	27.12	-58.51	-7.07
101	101	174	LIVE	9.44	-50.52	-20.72

Table 31: Element Forces - Area Shells, Part 1 of 2

Area	AreaElem	Joint	OutputCase	F11	F22	F12
				Kgf/m	Kgf/m	Kgf/m
101	101	345	SX	46.88	39.32	130.25
101	101	274	SX	229.44	44.51	104.05
101	101	275	SX	241.69	86.76	87.72
101	101	174	SX	33.91	28.24	95.06
101	101	345	SY	56.39	21.54	87.43
101	101	274	SY	80.98	28.62	88.5
101	101	275	SY	81.81	39.99	105.31
101	101	174	SY	44.74	37.78	100.7
101	101	345	WB	1.06	-0.18	-1.52
101	101	274	WB	3.69	0.57	-0.87
101	101	275	WB	3.01	-1.68	-0.96
101	101	174	WB	0.5	-2.04	-1.42
102	102	174	DEAD	-7.06	-70.24	36.55
102	102	275	DEAD	-7.98	-56.55	7.22
102	102	359	DEAD	7.43	-5.16	10.88
102	102	388	DEAD	13.67	-1.16	41.17
102	102	174	LIVE	2.46	-87.75	41.52
102	102	275	LIVE	35.59	-55.05	-2.58
102	102	359	LIVE	61.48	31.24	-26.73
102	102	388	LIVE	35.93	23.69	15.51
102	102	174	SX	177.28	45.86	34.1
102	102	275	SX	272.57	61.13	23.35
102	102	359	SX	315.26	207.29	162.32
102	102	388	SX	225.94	185.2	136.34
102	102	174	SY	63.69	76.77	111.32
102	102	275	SY	109.	48.71	69.02
102	102	359	SY	117.26	155.89	67.31
102	102	388	SY	98.39	185.83	47.37
102	102	174	WB	0.97	-3.	0.64
102	102	275	WB	3.76	-1.09	-1.2
102	102	359	WB	5.05	3.2	-3.63
102	102	388	WB	2.56	2.29	-2.01
103	103	387	DEAD	-17.58	-24.85	-17.67
103	103	389	DEAD	-10.94	-3.51	-28.2
103	103	359	DEAD	7.08	-3.52	-0.41
103	103	275	DEAD	-4.55	-41.79	8.88
103	103	387	LIVE	-25.23	-46.85	-22.65
103	103	389	LIVE	-7.84	10.91	-25.56
103	103	359	LIVE	58.01	29.03	6.16
103	103	275	LIVE	34.88	-47.94	4.11
103	103	387	SX	117.55	32.63	124.08
103	103	389	SX	138.3	117.37	167.14
103	103	359	SX	300.05	186.25	111.18
103	103	275	SX	283.98	126.59	53.07
103	103	387	SY	140.6	75.93	166.55
103	103	389	SY	103.96	75.22	176.88
103	103	359	SY	118.54	104.61	43.1
103	103	275	SY	121.23	72.74	22.97
103	103	387	WB	-1.25	-2.98	-1.3
103	103	389	WB	-9.652E-03	1.19	-0.75
103	103	359	WB	4.79	2.89	0.37
103	103	275	WB	3.34	-1.95	-0.55
104	104	278	DEAD	-59.27	-45.7	-22.07
104	104	356	DEAD	13.51	-23.86	-15.7

Table 31: Element Forces - Area Shells, Part 1 of 2

Area	AreaElem	Joint	OutputCase	F11	F22	F12
				Kgf/m	Kgf/m	Kgf/m
104	104	357	DEAD	16.35	-14.43	-21.68
104	104	170	DEAD	-56.42	-36.26	-28.04
104	104	278	LIVE	-43.88	-60.93	-26.24
104	104	356	LIVE	12.71	-43.95	-24.98
104	104	357	LIVE	6.88	-63.45	-27.31
104	104	170	LIVE	-49.71	-80.43	-28.56
104	104	278	SX	77.57	84.17	82.13
104	104	356	SX	44.62	49.18	62.06
104	104	357	SX	23.93	120.57	28.44
104	104	170	SX	98.51	156.05	22.74
104	104	278	SY	37.06	59.59	50.09
104	104	356	SY	14.38	59.51	31.47
104	104	357	SY	23.28	141.77	11.54
104	104	170	SY	34.16	139.91	39.14
104	104	278	WB	0.17	-2.48	-1.2
104	104	356	WB	0.15	-2.49	-1.55
104	104	357	WB	-0.66	-5.18	-1.24
104	104	170	WB	-0.64	-5.17	-0.89
105	105	356	DEAD	15.83	-15.78	31.19
105	105	246	DEAD	-158.99	-68.21	18.02
105	105	169	DEAD	-153.87	-51.59	24.1
105	105	357	DEAD	21.03	0.88	37.29
105	105	356	LIVE	12.99	-42.63	7.31
105	105	246	LIVE	-136.89	-87.59	-5.95
105	105	169	LIVE	-130.84	-67.8	2.25
105	105	357	LIVE	19.15	-22.81	15.55
105	105	356	SX	32.63	88.67	26.36
105	105	246	SX	77.96	120.49	22.39
105	105	169	SX	101.19	199.12	42.74
105	105	357	SX	16.87	167.57	79.22
105	105	356	SY	11.27	74.83	23.62
105	105	246	SY	31.45	79.93	28.69
105	105	169	SY	34.3	135.22	44.63
105	105	357	SY	28.76	134.15	42.73
105	105	356	WB	-2.074E-02	-3.05	-2.18
105	105	246	WB	-0.27	-3.13	-2.38
105	105	169	WB	0.14	-1.79	-2.08
105	105	357	WB	0.39	-1.71	-1.88
106	106	246	DEAD	-152.89	-67.76	-53.85
106	106	207	DEAD	37.12	-7.29	-47.74
106	106	208	DEAD	26.55	-44.01	-66.83
106	106	169	DEAD	-163.16	-103.79	-69.48
106	106	246	LIVE	-127.16	-75.36	-67.55
106	106	207	LIVE	28.68	-25.34	-59.61
106	106	208	LIVE	13.25	-78.2	-73.25
106	106	169	LIVE	-142.3	-127.33	-78.25
106	106	246	SX	58.89	74.92	94.42
106	106	207	SX	25.96	47.93	88.39
106	106	208	SX	9.81	131.02	41.4
106	106	169	SX	82.1	157.25	45.63
106	106	246	SY	23.99	40.84	61.21
106	106	207	SY	9.28	39.42	59.59
106	106	208	SY	21.58	115.71	26.57
106	106	169	SY	29.71	118.47	28.31

Table 31: Element Forces - Area Shells, Part 1 of 2

Area	AreaElem	Joint	OutputCase	F11	F22	F12
				Kgf/m	Kgf/m	Kgf/m
106	106	246	WB	0.17	-2.02	-2.39
106	106	207	WB	-0.2	-2.1	-1.97
106	106	208	WB	-0.86	-4.28	-1.77
106	106	169	WB	-0.47	-4.16	-2.19
107	107	207	DEAD	41.99	-15.39	8.99
107	107	227	DEAD	-106.31	-63.	40.86
107	107	168	DEAD	-110.33	-76.41	77.07
107	107	208	DEAD	39.15	-24.88	42.3
107	107	207	LIVE	36.81	-20.78	-2.52
107	107	227	LIVE	-99.64	-64.5	29.22
107	107	168	LIVE	-102.88	-75.3	68.78
107	107	208	LIVE	34.73	-27.69	34.4
107	107	207	SX	18.53	31.09	25.81
107	107	227	SX	17.29	46.21	15.81
107	107	168	SX	11.51	46.86	40.46
107	107	208	SX	37.63	60.07	75.68
107	107	207	SY	10.43	27.15	25.39
107	107	227	SY	41.78	34.3	17.57
107	107	168	SY	29.61	81.33	41.6
107	107	208	SY	27.68	95.62	57.61
107	107	207	WB	0.25	-0.88	-0.84
107	107	227	WB	-1.55	-1.43	-0.17
107	107	168	WB	-1.68	-1.85	0.9
107	107	208	WB	0.15	-1.22	0.2
109	109	55	DEAD	-39.41	54.76	-59.74
109	109	56	DEAD	-56.38	-1.8	-30.61
109	109	99	DEAD	172.69	66.92	-62.97
109	109	6	DEAD	189.66	123.48	-92.1
109	109	55	LIVE	-32.23	46.65	-51.13
109	109	56	LIVE	-48.02	-5.98	-34.82
109	109	99	LIVE	144.71	51.84	-59.95
109	109	6	LIVE	160.5	104.47	-76.27
109	109	55	SX	45.74	26.52	36.71
109	109	56	SX	38.47	14.77	36.07
109	109	99	SX	67.68	33.25	59.07
109	109	6	SX	61.19	11.94	72.58
109	109	55	SY	88.99	55.27	65.94
109	109	56	SY	70.46	21.12	54.93
109	109	99	SY	122.42	69.86	42.55
109	109	6	SY	104.71	22.65	113.79
109	109	55	WB	0.11	0.84	-0.39
109	109	56	WB	-0.26	-0.39	-1.05
109	109	99	WB	0.83	-6.983E-02	-1.03
109	109	6	WB	1.2	1.16	-0.37
110	110	8	DEAD	178.79	117.62	92.36
110	110	80	DEAD	164.	68.32	62.14
110	110	56	DEAD	-55.06	2.61	26.89
110	110	55	DEAD	-40.26	51.91	57.11
110	110	8	LIVE	150.27	85.99	70.26
110	110	80	LIVE	141.48	56.69	49.54
110	110	56	LIVE	-46.1	0.42	20.34
110	110	55	LIVE	-37.31	29.72	41.06
110	110	8	SX	100.83	42.56	19.04
110	110	80	SX	125.85	47.51	22.32

Table 31: Element Forces - Area Shells, Part 1 of 2

Area	AreaElem	Joint	OutputCase	F11	F22	F12
				Kgf/m	Kgf/m	Kgf/m
110	110	56	SX	39.03	7.47	20.46
110	110	55	SX	64.81	89.22	20.19
110	110	8	SY	292.66	29.34	67.24
110	110	80	SY	325.64	105.49	27.25
110	110	56	SY	78.25	17.83	24.3
110	110	55	SY	111.73	129.62	66.51
110	110	8	WB	0.22	-0.4	-0.28
110	110	80	WB	0.39	0.15	8.495E-02
110	110	56	WB	-0.14	-1.306E-02	-6.310E-02
110	110	55	WB	-0.3	-0.56	-0.43
111	111	80	DEAD	117.51	54.38	42.06
111	111	81	DEAD	110.36	30.54	24.03
111	111	57	DEAD	18.82	3.08	10.12
111	111	56	DEAD	25.97	26.91	28.15
111	111	80	LIVE	103.21	45.21	34.89
111	111	81	LIVE	97.71	26.88	17.21
111	111	57	LIVE	16.08	2.39	4.11
111	111	56	LIVE	21.58	20.73	21.79
111	111	80	SX	99.44	39.93	22.41
111	111	81	SX	94.87	24.5	15.95
111	111	57	SX	35.31	15.53	10.03
111	111	56	SX	30.48	5.48	26.52
111	111	80	SY	278.83	91.69	25.17
111	111	81	SY	273.45	73.58	64.66
111	111	57	SY	60.49	27.38	45.61
111	111	56	SY	54.81	10.74	27.62
111	111	80	WB	0.32	0.12	0.12
111	111	81	WB	0.31	0.11	-0.32
111	111	57	WB	0.25	9.435E-02	-0.48
111	111	56	WB	0.26	0.11	-3.586E-02
112	112	56	DEAD	24.65	22.51	-29.35
112	112	57	DEAD	18.62	2.4	-4.07
112	112	100	DEAD	107.53	29.07	-22.95
112	112	99	DEAD	113.57	49.18	-48.24
112	112	56	LIVE	19.66	14.32	-33.37
112	112	57	LIVE	13.57	-5.98	-1.91
112	112	100	LIVE	87.98	16.35	-21.09
112	112	99	LIVE	94.07	36.64	-52.54
112	112	56	SX	29.55	13.42	35.54
112	112	57	SX	17.13	70.65	101.52
112	112	100	SX	46.97	84.27	86.67
112	112	99	SX	32.96	24.29	48.01
112	112	56	SY	46.64	23.92	51.17
112	112	57	SY	23.88	113.66	116.05
112	112	100	SY	107.55	148.67	82.57
112	112	99	SY	82.93	58.83	84.95
112	112	56	WB	0.14	-0.28	-1.02
112	112	57	WB	-4.194E-02	-0.88	0.27
112	112	100	WB	0.34	-0.77	-0.11
112	112	99	WB	0.52	-0.16	-1.4
113	113	57	DEAD	56.87	13.87	-4.13
113	113	58	DEAD	56.69	13.28	-1.45
113	113	101	DEAD	51.06	11.59	-8.37
113	113	100	DEAD	51.24	12.18	-11.04

Table 31: Element Forces - Area Shells, Part 1 of 2

Area	AreaElem	Joint	OutputCase	F11	F22	F12
				Kgf/m	Kgf/m	Kgf/m
113	113	57	LIVE	46.06	3.77	-7.068E-02
113	113	58	LIVE	48.64	12.36	-3.31
113	113	101	LIVE	41.69	10.28	-11.98
113	113	100	LIVE	39.11	1.69	-8.74
113	113	57	SX	6.05	73.31	118.18
113	113	58	SX	22.4	12.26	65.35
113	113	101	SX	40.56	10.08	63.23
113	113	100	SX	64.96	91.46	112.01
113	113	57	SY	10.05	121.04	134.47
113	113	58	SY	33.97	23.27	27.
113	113	101	SY	86.14	15.86	22.4
113	113	100	SY	127.69	155.88	114.81
113	113	57	WB	9.608E-02	-0.84	0.49
113	113	58	WB	0.4	0.16	-0.13
113	113	101	WB	0.25	0.12	-0.44
113	113	100	WB	-4.809E-02	-0.89	0.18
114	114	81	DEAD	88.14	23.87	17.94
114	114	82	DEAD	88.88	26.35	11.23
114	114	58	DEAD	57.81	17.03	3.35
114	114	57	DEAD	57.07	14.55	10.06
114	114	81	LIVE	80.5	21.72	11.28
114	114	82	LIVE	79.85	19.57	8.65
114	114	58	LIVE	47.93	9.99	3.31
114	114	57	LIVE	48.57	12.14	5.95
114	114	81	SX	82.99	20.4	17.36
114	114	82	SX	88.4	39.01	19.17
114	114	58	SX	16.74	9.65	48.41
114	114	57	SX	22.73	12.25	20.14
114	114	81	SY	245.26	64.88	64.27
114	114	82	SY	249.9	81.03	23.53
114	114	58	SY	27.44	10.12	36.34
114	114	57	SY	32.98	19.48	32.76
114	114	81	WB	0.43	0.15	-0.42
114	114	82	WB	0.29	-0.33	-7.585E-02
114	114	58	WB	0.24	-0.35	8.405E-02
114	114	57	WB	0.39	0.14	-0.26
115	115	58	DEAD	56.03	13.08	0.17
115	115	59	DEAD	69.79	58.94	11.61
115	115	102	DEAD	58.71	55.62	12.19
115	115	101	DEAD	44.95	9.76	0.75
115	115	58	LIVE	48.84	12.42	-3.04
115	115	59	LIVE	58.14	43.44	5.77
115	115	102	LIVE	44.18	39.25	7.12
115	115	101	LIVE	34.87	8.23	-1.69
115	115	58	SX	19.42	5.88	59.72
115	115	59	SX	21.03	24.34	65.85
115	115	102	SX	32.85	20.05	90.98
115	115	101	SX	36.82	13.63	83.86
115	115	58	SY	37.65	7.13	26.8
115	115	59	SY	17.99	78.73	49.55
115	115	102	SY	39.99	71.6	78.62
115	115	101	SY	62.24	12.61	33.65
115	115	58	WB	0.37	0.15	-0.25
115	115	59	WB	0.17	-0.52	-0.31

Table 31: Element Forces - Area Shells, Part 1 of 2

Area	AreaElem	Joint	OutputCase	F11	F22	F12
				Kgf/m	Kgf/m	Kgf/m
115	115	102	WB	-4.010E-02	-0.58	-0.17
115	115	101	WB	0.16	8.970E-02	-0.12
116	116	82	DEAD	85.39	25.3	-2.82
116	116	83	DEAD	85.62	26.08	-7.96
116	116	59	DEAD	57.39	17.61	-0.16
116	116	58	DEAD	57.16	16.83	4.98
116	116	82	LIVE	77.34	18.82	-0.96
116	116	83	LIVE	78.38	22.27	-5.34
116	116	59	LIVE	49.16	13.51	-0.8
116	116	58	LIVE	48.12	10.05	3.58
116	116	82	SX	76.88	36.05	31.46
116	116	83	SX	69.23	13.14	26.48
116	116	59	SX	17.32	10.63	39.09
116	116	58	SX	25.14	21.31	41.06
116	116	82	SY	210.19	69.63	29.04
116	116	83	SY	194.57	20.39	45.14
116	116	59	SY	27.5	35.25	45.95
116	116	58	SY	43.8	22.65	23.96
116	116	82	WB	0.37	-0.31	0.12
116	116	83	WB	0.47	2.374E-02	8.803E-02
116	116	59	WB	0.32	-2.159E-02	-6.498E-02
116	116	58	WB	0.22	-0.35	-3.393E-02
117	117	59	DEAD	43.72	51.12	5.31
117	117	60	DEAD	53.64	84.19	24.45
117	117	103	DEAD	56.21	84.97	14.24
117	117	102	DEAD	46.29	51.89	-4.9
117	117	59	LIVE	40.08	38.02	1.74
117	117	60	LIVE	48.59	66.4	18.79
117	117	103	LIVE	39.64	63.71	10.99
117	117	102	LIVE	31.13	35.34	-6.06
117	117	59	SX	11.53	20.87	69.35
117	117	60	SX	8.88	28.5	75.5
117	117	103	SX	34.94	31.73	81.94
117	117	102	SX	37.62	27.75	64.24
117	117	59	SY	49.48	68.82	55.96
117	117	60	SY	38.81	102.57	67.38
117	117	103	SY	12.96	113.85	143.01
117	117	102	SY	16.71	79.67	46.38
117	117	59	WB	0.43	-0.44	-0.19
117	117	60	WB	0.5	-0.23	2.920E-03
117	117	103	WB	-0.3	-0.47	8.985E-02
117	117	102	WB	-0.36	-0.68	-0.11
118	118	83	DEAD	95.91	29.16	-5.38
118	118	84	DEAD	115.29	93.77	-50.08
118	118	60	DEAD	50.7	74.39	-51.16
118	118	59	DEAD	31.32	9.79	-6.46
118	118	83	LIVE	85.11	24.29	-3.27
118	118	84	LIVE	99.83	73.36	-38.05
118	118	60	LIVE	45.82	57.16	-39.6
118	118	59	LIVE	31.1	8.09	-4.82
118	118	83	SX	84.72	16.53	33.36
118	118	84	SX	86.35	22.91	38.34
118	118	60	SX	12.22	9.41	48.15
118	118	59	SX	12.42	10.98	41.57

Table 31: Element Forces - Area Shells, Part 1 of 2

Area	AreaElem	Joint	OutputCase	F11	F22	F12
				Kgf/m	Kgf/m	Kgf/m
118	118	83	SY	168.72	11.9	71.01
118	118	84	SY	162.9	16.65	56.69
118	118	60	SY	55.1	44.72	40.31
118	118	59	SY	61.29	25.58	46.4
118	118	83	WB	0.32	-2.194E-02	9.215E-02
118	118	84	WB	0.22	-0.35	0.26
118	118	60	WB	0.48	-0.27	0.21
118	118	59	WB	0.58	5.684E-02	5.022E-02
119	119	60	DEAD	7.21	70.26	25.36
119	119	61	DEAD	14.81	95.61	-5.91
119	119	12	DEAD	76.64	114.16	63.04
119	119	103	DEAD	69.04	88.81	94.31
119	119	60	LIVE	13.61	55.9	20.34
119	119	61	LIVE	18.53	72.32	-5.43
119	119	12	LIVE	53.17	82.71	45.44
119	119	103	LIVE	48.24	66.29	71.21
119	119	60	SX	13.06	27.16	87.33
119	119	61	SX	15.07	81.97	26.16
119	119	12	SX	36.16	86.03	42.29
119	119	103	SX	25.67	28.79	97.74
119	119	60	SY	65.12	94.91	132.73
119	119	61	SY	30.43	238.2	108.21
119	119	12	SY	24.2	249.12	65.24
119	119	103	SY	28.14	105.93	48.95
119	119	60	WB	0.71	-0.17	9.193E-02
119	119	61	WB	0.58	-0.59	4.553E-02
119	119	12	WB	-0.57	-0.94	-0.48
119	119	103	WB	-0.44	-0.52	-0.43
120	120	84	DEAD	127.5	97.43	-119.22
120	120	10	DEAD	154.22	186.51	-79.43
120	120	61	DEAD	30.99	149.54	-10.45
120	120	60	DEAD	4.27	60.46	-50.24
120	120	84	LIVE	108.13	75.85	-92.57
120	120	10	LIVE	130.12	149.13	-60.44
120	120	61	LIVE	32.82	119.94	-5.93
120	120	60	LIVE	10.84	46.66	-38.05
120	120	84	SX	99.48	28.06	30.83
120	120	10	SX	94.65	21.89	53.13
120	120	61	SX	24.42	31.57	94.08
120	120	60	SX	17.07	8.	53.95
120	120	84	SY	119.03	30.35	55.38
120	120	10	SY	130.38	36.	105.55
120	120	61	SY	93.59	31.96	157.91
120	120	60	SY	81.49	36.87	91.64
120	120	84	WB	7.426E-02	-0.4	0.39
120	120	10	WB	0.11	-0.26	0.39
120	120	61	WB	0.74	-7.669E-02	0.3
120	120	60	WB	0.7	-0.21	0.3
121	121	61	DEAD	27.35	99.37	-6.392E-02
121	121	62	DEAD	15.3	59.22	-41.51
121	121	104	DEAD	92.8	82.47	-95.42
121	121	12	DEAD	104.85	122.62	-53.97
121	121	61	LIVE	24.7	74.17	-0.64
121	121	62	LIVE	15.91	44.88	-30.99

Table 31: Element Forces - Area Shells, Part 1 of 2

Area	AreaElem	Joint	OutputCase	F11	F22	F12
				Kgf/m	Kgf/m	Kgf/m
121	121	104	LIVE	89.15	66.86	-71.83
121	121	12	LIVE	97.93	96.14	-41.48
121	121	61	SX	27.16	82.41	27.38
121	121	62	SX	28.48	35.06	121.2
121	121	104	SX	97.58	46.78	193.48
121	121	12	SX	106.61	98.33	99.63
121	121	61	SY	28.79	237.61	92.05
121	121	62	SY	71.31	75.71	259.6
121	121	104	SY	236.35	166.59	456.49
121	121	12	SY	284.51	328.36	285.84
121	121	61	WB	0.2	-0.71	6.107E-02
121	121	62	WB	0.32	-0.32	0.38
121	121	104	WB	1.28	-3.370E-02	0.7
121	121	12	WB	1.16	-0.42	0.38
122	122	10	DEAD	69.59	161.12	70.1
122	122	85	DEAD	45.74	81.61	133.69
122	122	62	DEAD	19.68	73.79	58.99
122	122	61	DEAD	43.53	153.3	-4.61
122	122	10	LIVE	59.66	127.99	58.3
122	122	85	LIVE	40.8	65.13	108.12
122	122	62	LIVE	20.12	58.93	48.69
122	122	61	LIVE	38.98	121.79	-1.13
122	122	10	SX	90.51	33.5	77.68
122	122	85	SX	87.96	12.52	52.05
122	122	62	SX	25.23	9.52	70.25
122	122	61	SX	29.69	29.07	97.76
122	122	10	SY	295.8	73.66	132.4
122	122	85	SY	284.69	29.48	91.33
122	122	62	SY	83.89	31.76	99.79
122	122	61	SY	95.1	33.47	141.52
122	122	10	WB	0.2	-0.24	0.2
122	122	85	WB	0.24	-0.12	3.260E-02
122	122	62	WB	0.39	-7.751E-02	0.15
122	122	61	WB	0.36	-0.19	0.32
123	123	62	DEAD	62.41	73.35	-37.55
123	123	63	DEAD	50.03	32.1	25.76
123	123	105	DEAD	67.34	37.3	15.87
123	123	104	DEAD	79.71	78.54	-47.44
123	123	62	LIVE	53.09	56.04	-27.51
123	123	63	LIVE	44.29	26.7	22.93
123	123	105	LIVE	70.07	34.43	14.07
123	123	104	LIVE	78.87	63.77	-36.36
123	123	62	SX	25.71	40.07	136.07
123	123	63	SX	21.23	21.29	116.8
123	123	105	SX	126.16	32.97	103.96
123	123	104	SX	124.41	39.9	123.29
123	123	62	SY	23.56	102.49	320.8
123	123	63	SY	32.49	64.83	257.51
123	123	105	SY	87.55	36.98	229.85
123	123	104	SY	131.14	133.05	293.03
123	123	62	WB	0.17	-0.36	0.42
123	123	63	WB	0.31	8.212E-02	0.34
123	123	105	WB	1.51	0.44	0.26
123	123	104	WB	1.38	-3.371E-03	0.35

Table 31: Element Forces - Area Shells, Part 1 of 2

Area	AreaElem	Joint	OutputCase	F11	F22	F12
				Kgf/m	Kgf/m	Kgf/m
124	124	86	DEAD	-2.43	6.51	-3.33
124	124	87	DEAD	-2.02	7.88	15.62
124	124	64	DEAD	78.32	31.98	14.55
124	124	63	DEAD	77.9	30.61	-4.41
124	124	86	LIVE	-0.42	5.06	-3.047E-02
124	124	87	LIVE	0.11	6.82	14.27
124	124	64	LIVE	67.63	27.08	13.12
124	124	63	LIVE	67.11	25.32	-1.18
124	124	86	SX	122.59	32.27	77.12
124	124	87	SX	122.4	28.27	88.34
124	124	64	SX	11.48	12.1	96.26
124	124	63	SX	12.92	19.38	84.97
124	124	86	SY	145.12	19.66	177.63
124	124	87	SY	161.71	46.79	191.44
124	124	64	SY	20.19	7.34	196.63
124	124	63	SY	36.18	65.12	182.83
124	124	86	WB	-2.411E-02	-6.046E-02	0.34
124	124	87	WB	-4.649E-03	4.417E-03	0.22
124	124	64	WB	0.32	0.1	0.2
124	124	63	WB	0.3	3.759E-02	0.32
125	125	85	DEAD	32.63	77.68	61.97
125	125	86	DEAD	12.64	11.03	-1.43
125	125	63	DEAD	46.78	21.27	-0.45
125	125	62	DEAD	66.78	87.93	62.95
125	125	85	LIVE	29.16	61.64	51.33
125	125	86	LIVE	13.44	9.22	1.48
125	125	63	LIVE	41.58	17.66	2.32
125	125	62	LIVE	57.3	70.08	52.17
125	125	85	SX	97.39	14.98	60.15
125	125	86	SX	98.47	20.53	69.84
125	125	63	SX	17.76	16.82	93.02
125	125	62	SX	15.32	14.68	82.27
125	125	85	SY	248.65	20.71	102.58
125	125	86	SY	249.1	20.66	146.
125	125	63	SY	12.34	56.58	203.71
125	125	62	SY	11.93	58.44	160.27
125	125	85	WB	0.13	-0.16	0.15
125	125	86	WB	0.18	-7.044E-04	0.31
125	125	63	WB	0.29	3.510E-02	0.35
125	125	62	WB	0.25	-0.12	0.19
126	126	63	DEAD	81.15	41.44	21.81
126	126	64	DEAD	77.98	30.85	-6.57
126	126	106	DEAD	48.23	21.93	-12.65
126	126	105	DEAD	51.41	32.52	15.73
126	126	63	LIVE	69.82	34.36	19.43
126	126	64	LIVE	67.23	25.72	-3.81
126	126	106	LIVE	52.7	21.36	-10.37
126	126	105	LIVE	55.29	30.	12.87
126	126	63	SX	6.03	16.74	108.6
126	126	64	SX	7.19	30.77	82.01
126	126	106	SX	82.57	17.04	109.36
126	126	105	SX	86.99	19.7	136.17
126	126	63	SY	11.2	56.18	236.55
126	126	64	SY	21.19	17.49	201.79

Table 31: Element Forces - Area Shells, Part 1 of 2

Area	AreaElem	Joint	OutputCase	F11	F22	F12
				Kgf/m	Kgf/m	Kgf/m
126	126	106	SY	129.72	47.21	235.01
126	126	105	SY	110.31	27.28	269.71
126	126	63	WB	0.32	8.461E-02	0.3
126	126	64	WB	0.31	4.632E-02	0.25
126	126	106	WB	1.33	0.36	7.546E-02
126	126	105	WB	1.35	0.39	0.13
127	127	64	DEAD	51.83	23.01	-7.55
127	127	65	DEAD	63.67	62.48	49.3
127	127	107	DEAD	85.91	69.15	47.91
127	127	106	DEAD	74.07	29.68	-8.94
127	127	64	LIVE	46.48	19.5	-4.96
127	127	65	LIVE	55.51	49.59	39.21
127	127	107	LIVE	86.31	58.84	37.83
127	127	106	LIVE	77.29	28.74	-6.34
127	127	64	SX	11.67	26.29	89.85
127	127	65	SX	11.2	27.64	149.69
127	127	107	SX	97.9	17.23	143.86
127	127	106	SX	98.99	20.71	84.51
127	127	64	SY	9.81	13.61	220.57
127	127	65	SY	11.21	13.95	288.66
127	127	107	SY	180.21	58.33	278.18
127	127	106	SY	181.46	62.22	210.22
127	127	64	WB	0.38	6.765E-02	0.21
127	127	65	WB	0.29	-0.21	-4.029E-02
127	127	107	WB	1.64	0.19	-5.971E-02
127	127	106	WB	1.73	0.47	0.19
128	128	87	DEAD	5.47	10.13	11.09
128	128	88	DEAD	18.91	54.93	-46.14
128	128	65	DEAD	65.61	68.93	-43.66
128	128	64	DEAD	52.17	24.14	13.57
128	128	87	LIVE	4.69	8.2	10.02
128	128	88	LIVE	15.41	43.91	-34.79
128	128	65	LIVE	57.6	56.57	-32.83
128	128	64	LIVE	46.89	20.86	11.97
128	128	87	SX	158.62	38.58	93.79
128	128	88	SX	157.53	35.07	82.66
128	128	65	SX	25.33	20.05	92.65
128	128	64	SX	24.3	16.28	103.94
128	128	87	SY	77.32	17.52	194.71
128	128	88	SY	76.1	14.16	189.24
128	128	65	SY	13.78	12.19	209.98
128	128	64	SY	12.84	6.59	215.54
128	128	87	WB	-0.21	-5.729E-02	0.16
128	128	88	WB	-0.25	-0.18	0.39
128	128	65	WB	0.36	-2.450E-03	0.4
128	128	64	WB	0.39	0.12	0.16
129	129	65	DEAD	4.58	44.75	47.27
129	129	66	DEAD	30.83	132.26	-1.26
129	129	26	DEAD	139.88	164.98	64.93
129	129	107	DEAD	113.63	77.46	113.46
129	129	65	LIVE	8.55	35.51	37.35
129	129	66	LIVE	29.64	105.8	-0.57
129	129	26	LIVE	132.21	136.57	52.84
129	129	107	LIVE	111.12	66.28	90.76

Table 31: Element Forces - Area Shells, Part 1 of 2

Area	AreaElem	Joint	OutputCase	F11	F22	F12
				Kgf/m	Kgf/m	Kgf/m
129	129	65	SX	18.2	25.71	158.94
129	129	66	SX	20.77	41.36	105.1
129	129	26	SX	130.22	43.42	94.33
129	129	107	SX	127.28	13.36	148.58
129	129	65	SY	15.5	15.22	300.94
129	129	66	SY	26.23	54.07	269.69
129	129	26	SY	148.17	81.25	245.9
129	129	107	SY	140.04	44.88	277.48
129	129	65	WB	0.46	-0.16	-5.465E-02
129	129	66	WB	0.4	-0.37	0.13
129	129	26	WB	1.84	6.058E-02	9.999E-03
129	129	107	WB	1.9	0.27	-0.17
130	130	88	DEAD	37.6	60.53	-102.39
130	130	28	DEAD	60.87	138.1	-61.5
130	130	66	DEAD	29.79	128.78	-4.79
130	130	65	DEAD	6.52	51.21	-45.68
130	130	88	LIVE	29.86	48.25	-79.11
130	130	28	LIVE	47.78	108.	-48.76
130	130	66	LIVE	28.57	102.23	-4.34
130	130	65	LIVE	10.65	42.49	-34.68
130	130	88	SX	199.93	48.4	69.81
130	130	28	SX	193.46	46.32	100.62
130	130	66	SX	39.66	58.08	133.89
130	130	65	SX	32.18	22.09	101.86
130	130	88	SY	149.55	39.81	181.8
130	130	28	SY	139.12	66.31	207.23
130	130	66	SY	19.31	77.96	249.37
130	130	65	SY	16.63	12.56	222.16
130	130	88	WB	-0.39	-0.23	0.6
130	130	28	WB	-0.51	-0.64	0.27
130	130	66	WB	0.4	-0.36	4.386E-02
130	130	65	WB	0.53	4.902E-02	0.38
131	131	66	DEAD	51.93	138.59	-1.75
131	131	67	DEAD	19.99	32.12	-38.29
131	131	108	DEAD	72.28	47.81	-86.27
131	131	26	DEAD	104.22	154.28	-49.73
131	131	66	LIVE	47.27	111.09	-1.44
131	131	67	LIVE	21.76	26.05	-29.47
131	131	108	LIVE	73.88	41.69	-67.44
131	131	26	LIVE	99.4	126.73	-39.41
131	131	66	SX	58.1	58.87	117.82
131	131	67	SX	36.27	37.26	187.13
131	131	108	SX	348.65	112.6	202.73
131	131	26	SX	338.08	73.74	133.91
131	131	66	SY	154.17	80.57	282.01
131	131	67	SY	98.27	122.51	357.68
131	131	108	SY	202.36	202.86	389.39
131	131	26	SY	163.26	65.01	313.48
131	131	66	WB	0.37	-0.38	8.712E-02
131	131	67	WB	0.46	-8.397E-02	0.36
131	131	108	WB	1.76	0.31	0.51
131	131	26	WB	1.68	1.220E-02	0.24
132	132	28	DEAD	24.31	127.13	34.33
132	132	89	DEAD	-5.03	29.33	74.85

Table 31: Element Forces - Area Shells, Part 1 of 2

Area	AreaElem	Joint	OutputCase	F11	F22	F12
				Kgf/m	Kgf/m	Kgf/m
132	132	67	DEAD	21.55	37.31	35.24
132	132	66	DEAD	50.89	135.11	-5.28
132	132	28	LIVE	16.69	98.67	25.63
132	132	89	LIVE	-5.85	23.56	57.58
132	132	67	LIVE	23.66	32.41	26.74
132	132	66	LIVE	46.2	107.52	-5.22
132	132	28	SX	147.48	47.46	120.18
132	132	89	SX	149.91	28.49	101.34
132	132	67	SX	42.32	15.43	126.22
132	132	66	SX	32.09	40.5	145.59
132	132	28	SY	102.41	82.99	222.54
132	132	89	SY	93.69	27.61	195.74
132	132	67	SY	136.4	19.56	235.03
132	132	66	SY	128.25	51.37	261.98
132	132	28	WB	-0.63	-0.67	-0.2
132	132	89	WB	-0.46	-0.12	-0.36
132	132	67	WB	0.54	0.18	-0.15
132	132	66	WB	0.38	-0.37	4.119E-03
133	133	67	DEAD	63.37	45.14	-40.93
133	133	68	DEAD	62.8	43.21	32.96
133	133	109	DEAD	49.16	39.12	33.56
133	133	108	DEAD	49.74	41.05	-40.33
133	133	67	LIVE	53.71	35.63	-31.52
133	133	68	LIVE	53.8	35.91	27.13
133	133	109	LIVE	57.75	37.1	27.02
133	133	108	LIVE	57.67	36.82	-31.63
133	133	67	SX	34.77	38.28	177.15
133	133	68	SX	31.86	28.28	109.54
133	133	109	SX	199.13	30.27	101.55
133	133	108	SX	207.9	70.42	169.39
133	133	67	SY	74.	129.51	344.33
133	133	68	SY	101.84	39.85	222.48
133	133	109	SY	80.54	69.53	163.6
133	133	108	SY	86.8	161.13	282.06
133	133	67	WB	0.12	-0.19	0.36
133	133	68	WB	0.17	-2.973E-02	4.066E-02
133	133	109	WB	1.91	0.49	-6.743E-03
133	133	108	WB	1.86	0.34	0.31
134	134	89	DEAD	-13.62	26.76	33.01
134	134	90	DEAD	-13.08	28.55	-48.81
134	134	68	DEAD	65.46	52.11	-49.22
134	134	67	DEAD	64.93	50.32	32.6
134	134	89	LIVE	-10.9	22.04	23.69
134	134	90	LIVE	-10.31	24.	-42.29
134	134	68	LIVE	56.21	43.95	-41.29
134	134	67	LIVE	55.62	42.	24.69
134	134	89	SX	224.1	49.99	114.1
134	134	90	SX	223.93	49.39	125.93
134	134	68	SX	46.98	29.2	128.08
134	134	67	SX	47.31	29.48	116.25
134	134	89	SY	216.92	30.12	204.89
134	134	90	SY	215.47	25.46	229.03
134	134	68	SY	110.56	17.64	245.95
134	134	67	SY	112.33	18.47	221.83

Table 31: Element Forces - Area Shells, Part 1 of 2

Area	AreaElem	Joint	OutputCase	F11	F22	F12
				Kgf/m	Kgf/m	Kgf/m
134	134	89	WB	-0.32	-7.898E-02	-0.29
134	134	90	WB	-0.32	-5.379E-02	-9.951E-02
134	134	68	WB	0.21	0.1	4.019E-02
134	134	67	WB	0.2	7.759E-02	-0.15
135	135	68	DEAD	13.1	28.3	33.01
135	135	69	DEAD	45.61	136.67	-8.24
135	135	24	DEAD	103.95	154.18	38.53
135	135	109	DEAD	71.44	45.81	79.78
135	135	68	LIVE	9.36	22.58	26.4
135	135	69	LIVE	35.38	109.3	-6.64
135	135	24	LIVE	111.44	132.12	30.73
135	135	109	LIVE	85.42	45.4	63.77
135	135	68	SX	57.85	23.68	110.63
135	135	69	SX	52.14	67.19	147.49
135	135	24	SX	191.	64.19	157.19
135	135	109	SX	193.76	24.55	120.39
135	135	68	SY	38.17	58.48	203.84
135	135	69	SY	74.9	100.62	262.34
135	135	24	SY	173.12	128.73	274.32
135	135	109	SY	134.55	46.41	215.67
135	135	68	WB	-0.12	-0.12	-3.252E-02
135	135	69	WB	-0.23	-0.48	0.12
135	135	24	WB	2.7	0.4	-3.264E-02
135	135	109	WB	2.81	0.76	-0.18
136	136	90	DEAD	9.81	35.41	-94.3
136	136	30	DEAD	35.83	122.13	-50.77
136	136	69	DEAD	41.78	123.91	-5.65
136	136	68	DEAD	15.77	37.2	-49.18
136	136	90	LIVE	12.09	30.72	-78.6
136	136	30	LIVE	31.69	96.03	-44.66
136	136	69	LIVE	31.37	95.94	-8.09
136	136	68	LIVE	11.77	30.62	-42.03
136	136	90	SX	309.32	75.05	115.97
136	136	30	SX	302.78	64.54	134.49
136	136	69	SX	78.66	69.27	148.17
136	136	68	SX	74.1	39.57	129.36
136	136	90	SY	400.05	81.1	229.66
136	136	30	SY	388.34	70.14	243.59
136	136	69	SY	43.86	91.26	242.06
136	136	68	SY	46.82	32.03	227.08
136	136	90	WB	-4.400E-02	2.778E-02	6.168E-02
136	136	30	WB	-0.25	-0.64	-0.15
136	136	69	WB	-0.29	-0.66	-0.25
136	136	68	WB	-8.400E-02	1.578E-02	-3.299E-02
137	137	69	DEAD	49.96	137.98	-13.15
137	137	70	DEAD	17.5	29.76	-50.34
137	137	110	DEAD	20.36	30.62	-101.61
137	137	24	DEAD	52.82	138.84	-64.42
137	137	69	LIVE	47.64	112.98	-12.08
137	137	70	LIVE	21.19	24.81	-43.05
137	137	110	LIVE	-2.25	17.78	-80.65
137	137	24	LIVE	24.2	105.95	-49.68
137	137	69	SX	35.53	73.67	177.3
137	137	70	SX	34.22	27.89	190.21

Table 31: Element Forces - Area Shells, Part 1 of 2

Area	AreaElem	Joint	OutputCase	F11	F22	F12
				Kgf/m	Kgf/m	Kgf/m
137	137	110	SX	389.88	80.57	173.72
137	137	24	SX	382.65	73.9	160.12
137	137	69	SY	101.09	107.67	323.7
137	137	70	SY	73.55	13.79	332.47
137	137	110	SY	128.4	41.91	285.87
137	137	24	SY	131.76	96.04	273.87
137	137	69	WB	0.58	-0.23	-8.350E-03
137	137	70	WB	0.63	-4.446E-02	-2.284E-02
137	137	110	WB	-1.4	-0.65	0.45
137	137	24	WB	-1.46	-0.84	0.47
138	138	30	DEAD	60.94	129.66	42.85
138	138	91	DEAD	32.98	36.47	71.23
138	138	70	DEAD	18.18	32.03	17.82
138	138	69	DEAD	46.14	125.22	-10.57
138	138	30	LIVE	51.07	101.85	28.82
138	138	91	LIVE	28.91	27.97	50.9
138	138	70	LIVE	21.47	25.73	8.54
138	138	69	LIVE	43.63	99.62	-13.54
138	138	30	SX	289.32	58.32	156.71
138	138	91	SX	294.5	64.57	163.83
138	138	70	SX	52.97	39.05	183.57
138	138	69	SX	54.3	62.66	177.52
138	138	30	SY	384.62	63.74	265.3
138	138	91	SY	403.82	101.05	283.64
138	138	70	SY	76.83	13.34	320.58
138	138	69	SY	62.69	84.82	303.67
138	138	30	WB	-0.46	-0.71	-0.6
138	138	91	WB	-0.34	-0.33	-0.75
138	138	70	WB	0.64	-3.344E-02	-0.53
138	138	69	WB	0.52	-0.41	-0.38
139	139	70	DEAD	80.18	48.57	-47.35
139	139	71	DEAD	72.18	21.89	-17.04
139	139	111	DEAD	-17.67	-5.06	-12.21
139	139	110	DEAD	-9.66	21.61	-42.52
139	139	70	LIVE	68.5	39.	-39.1
139	139	71	LIVE	62.76	19.86	-15.21
139	139	111	LIVE	-31.83	-8.51	-12.13
139	139	110	LIVE	-26.09	10.62	-36.02
139	139	70	SX	38.14	26.43	179.51
139	139	71	SX	36.4	43.31	164.9
139	139	111	SX	486.97	95.96	182.11
139	139	110	SX	491.93	112.96	196.51
139	139	70	SY	76.64	12.24	300.35
139	139	71	SY	99.62	76.38	263.91
139	139	111	SY	237.14	38.95	305.59
139	139	110	SY	255.91	95.6	342.21
139	139	70	WB	0.14	-0.19	0.11
139	139	71	WB	0.23	9.983E-02	-1.974E-02
139	139	111	WB	-1.14	-0.31	-9.125E-02
139	139	110	WB	-1.22	-0.6	3.436E-02
140	140	91	DEAD	20.51	32.73	11.75
140	140	92	DEAD	9.44	-4.17	-16.33
140	140	71	DEAD	69.79	13.93	-7.27
140	140	70	DEAD	80.86	50.83	20.81

Table 31: Element Forces - Area Shells, Part 1 of 2

Area	AreaElem	Joint	OutputCase	F11	F22	F12
				Kgf/m	Kgf/m	Kgf/m
140	140	91	LIVE	23.36	26.3	3.58
140	140	92	LIVE	13.94	-5.07	-17.55
140	140	71	LIVE	59.37	8.55	-8.63
140	140	70	LIVE	68.78	39.93	12.5
140	140	91	SX	393.97	94.98	170.08
140	140	92	SX	378.37	43.56	173.15
140	140	71	SX	67.34	88.41	175.77
140	140	70	SX	57.15	40.28	172.78
140	140	91	SY	607.78	162.68	308.09
140	140	92	SY	571.18	41.9	338.8
140	140	71	SY	48.6	120.71	317.27
140	140	70	SY	80.14	13.94	288.28
140	140	91	WB	7.550E-02	-0.2	-0.53
140	140	92	WB	6.718E-02	-0.23	-0.31
140	140	71	WB	0.14	-0.21	-0.19
140	140	70	WB	0.15	-0.18	-0.4
141	141	71	DEAD	81.37	24.65	-20.77
141	141	72	DEAD	90.98	56.7	9.64
141	141	112	DEAD	-25.05	21.89	0.91
141	141	111	DEAD	-34.67	-10.16	-29.51
141	141	71	LIVE	69.77	21.97	-19.58
141	141	72	LIVE	76.94	45.89	1.5
141	141	112	LIVE	-40.05	10.79	-3.51
141	141	111	LIVE	-47.23	-13.13	-24.58
141	141	71	SX	42.87	52.45	178.22
141	141	72	SX	34.45	26.07	268.12
141	141	112	SX	633.98	180.79	253.24
141	141	111	SX	621.88	137.54	163.79
141	141	71	SY	146.52	89.35	310.23
141	141	72	SY	105.4	53.93	485.32
141	141	112	SY	488.73	225.24	399.4
141	141	111	SY	450.46	97.46	228.25
141	141	71	WB	0.13	7.067E-02	-0.13
141	141	72	WB	6.516E-02	-0.16	-0.51
141	141	112	WB	-1.25	-0.55	-0.3
141	141	111	WB	-1.18	-0.32	8.579E-02
142	142	92	DEAD	12.88	-3.14	8.8
142	142	93	DEAD	21.17	24.49	-24.33
142	142	72	DEAD	87.27	44.32	-44.13
142	142	71	DEAD	78.98	16.69	-11.
142	142	92	LIVE	19.4	-3.44	4.32
142	142	93	LIVE	25.95	18.4	-20.47
142	142	72	LIVE	72.92	32.49	-37.79
142	142	71	LIVE	66.37	10.65	-13.
142	142	92	SX	474.25	71.17	158.89
142	142	93	SX	446.94	38.43	109.74
142	142	72	SX	62.41	170.6	139.57
142	142	71	SX	49.98	78.38	189.23
142	142	92	SY	778.57	102.96	308.15
142	142	93	SY	746.45	67.14	206.12
142	142	72	SY	64.14	223.22	262.62
142	142	71	SY	91.28	105.57	365.56
142	142	92	WB	0.28	-0.17	-0.24
142	142	93	WB	0.26	-0.23	6.232E-03

Table 31: Element Forces - Area Shells, Part 1 of 2

Area	AreaElem	Joint	OutputCase	F11	F22	F12
				Kgf/m	Kgf/m	Kgf/m
142	142	72	WB	2.130E-02	-0.3	-4.372E-02
142	142	71	WB	4.168E-02	-0.24	-0.29
143	143	72	DEAD	54.68	45.81	15.17
143	143	73	DEAD	70.08	97.15	-25.56
143	143	42	DEAD	-10.04	73.12	11.76
143	143	112	DEAD	-25.44	21.77	52.49
143	143	72	LIVE	50.21	37.87	7.33
143	143	73	LIVE	60.2	71.17	-21.62
143	143	42	LIVE	-32.53	43.35	3.58
143	143	112	LIVE	-42.52	10.05	32.54
143	143	72	SX	144.8	47.05	260.43
143	143	73	SX	50.39	317.43	216.8
143	143	42	SX	884.67	581.89	330.6
143	143	112	SX	782.87	227.75	375.8
143	143	72	SY	284.96	19.58	441.57
143	143	73	SY	118.77	555.41	268.46
143	143	42	SY	869.77	848.52	489.04
143	143	112	SY	704.43	290.71	686.43
143	143	72	WB	0.31	-8.662E-02	-0.41
143	143	73	WB	9.405E-02	-0.79	0.1
143	143	42	WB	-1.59	-1.3	-0.39
143	143	112	WB	-1.38	-0.59	-0.91
144	144	93	DEAD	27.78	26.47	-92.57
144	144	32	DEAD	66.77	156.43	-41.54
144	144	73	DEAD	89.96	163.39	12.42
144	144	72	DEAD	50.97	33.43	-38.6
144	144	93	LIVE	31.06	19.93	-74.85
144	144	32	LIVE	63.37	127.63	-33.32
144	144	73	LIVE	78.5	132.17	9.58
144	144	72	LIVE	46.19	24.47	-31.95
144	144	93	SX	475.44	29.16	56.78
144	144	32	SX	473.14	74.3	31.57
144	144	73	SX	91.71	149.05	92.67
144	144	72	SX	101.87	131.68	132.31
144	144	93	SY	868.3	71.73	148.68
144	144	32	SY	847.05	121.71	154.81
144	144	73	SY	209.88	251.5	210.49
144	144	72	SY	234.46	167.52	220.35
144	144	93	WB	0.23	-0.24	0.23
144	144	32	WB	0.22	-0.28	8.670E-02
144	144	73	WB	0.25	-0.27	-8.582E-02
144	144	72	WB	0.26	-0.23	5.612E-02
145	145	73	DEAD	12.89	79.99	-16.03
145	145	74	DEAD	-0.24	36.25	-19.41
145	145	390	DEAD	182.93	91.19	-49.47
145	145	42	DEAD	196.05	134.94	-46.09
145	145	73	LIVE	9.7	56.02	-12.46
145	145	74	LIVE	2.59	32.34	-12.15
145	145	390	LIVE	146.91	75.63	-36.04
145	145	42	LIVE	154.02	99.32	-36.35
145	145	73	SX	80.19	310.23	139.35
145	145	74	SX	46.26	424.03	53.11
145	145	390	SX	507.14	562.53	100.54
145	145	42	SX	488.55	458.25	258.26

Table 31: Element Forces - Area Shells, Part 1 of 2

Area	AreaElem	Joint	OutputCase	F11	F22	F12
				Kgf/m	Kgf/m	Kgf/m
145	145	73	SY	213.5	527.23	173.78
145	145	74	SY	173.85	699.62	100.45
145	145	390	SY	498.99	882.79	149.04
145	145	42	SY	465.97	721.53	281.41
145	145	73	WB	-0.13	-0.86	0.19
145	145	74	WB	0.28	0.51	0.37
145	145	390	WB	-0.28	0.34	0.49
145	145	42	WB	-0.69	-1.03	0.32
146	146	32	DEAD	163.13	185.34	81.23
146	146	94	DEAD	129.33	72.67	110.45
146	146	74	DEAD	-1.04	33.56	51.19
146	146	73	DEAD	32.76	146.23	21.96
146	146	32	LIVE	141.21	150.98	65.89
146	146	94	LIVE	113.87	59.85	88.91
146	146	74	LIVE	0.66	25.88	41.76
146	146	73	LIVE	28.	117.02	18.74
146	146	32	SX	418.65	76.35	49.12
146	146	94	SX	421.32	43.39	58.04
146	146	74	SX	128.35	125.19	37.11
146	146	73	SX	120.75	141.32	34.39
146	146	32	SY	720.84	129.72	107.01
146	146	94	SY	717.79	97.24	61.89
146	146	74	SY	305.45	218.14	48.21
146	146	73	SY	305.36	224.74	121.23
146	146	32	WB	-0.13	-0.39	-0.24
146	146	94	WB	-5.477E-02	-0.12	-0.37
146	146	74	WB	0.1	-7.597E-02	-0.13
146	146	73	WB	2.432E-02	-0.34	2.888E-03
147	147	74	DEAD	53.42	52.16	-14.82
147	147	75	DEAD	48.4	35.41	29.09
147	147	391	DEAD	176.29	73.78	21.6
147	147	113	DEAD	181.31	90.52	-22.33
147	147	74	LIVE	42.98	44.32	-7.62
147	147	75	LIVE	39.39	32.37	22.3
147	147	391	LIVE	147.94	64.93	12.79
147	147	113	LIVE	151.53	76.88	-17.14
147	147	74	SX	35.47	430.89	173.79
147	147	75	SX	72.76	248.65	110.52
147	147	391	SX	338.32	342.01	110.46
147	147	113	SX	380.09	524.24	105.94
147	147	74	SY	171.27	708.23	117.44
147	147	75	SY	210.12	506.84	304.35
147	147	391	SY	533.82	701.99	378.12
147	147	113	SY	559.23	883.26	146.92
147	147	74	WB	-0.2	0.37	0.37
147	147	75	WB	-0.16	0.53	-0.38
147	147	391	WB	0.42	0.7	-0.67
147	147	113	WB	0.37	0.54	7.399E-02
148	148	94	DEAD	104.23	65.14	42.16
148	148	95	DEAD	92.99	27.66	-11.15
148	148	75	DEAD	41.45	12.2	2.16
148	148	74	DEAD	52.69	49.68	55.47
148	148	94	LIVE	94.01	53.89	33.99
148	148	95	LIVE	85.33	24.96	-8.1

Table 31: Element Forces - Area Shells, Part 1 of 2

Area	AreaElem	Joint	OutputCase	F11	F22	F12
				Kgf/m	Kgf/m	Kgf/m
148	148	75	LIVE	32.42	9.08	3.23
148	148	74	LIVE	41.09	38.01	45.31
148	148	94	SX	371.07	50.82	71.99
148	148	95	SX	379.67	31.17	128.82
148	148	75	SX	118.94	101.59	137.95
148	148	74	SX	111.67	129.28	80.92
148	148	94	SY	697.96	102.29	85.89
148	148	95	SY	724.98	54.89	118.24
148	148	75	SY	320.28	139.07	142.04
148	148	74	SY	293.81	221.29	112.91
148	148	94	WB	0.13	-6.835E-02	-0.21
148	148	95	WB	0.19	0.13	-2.681E-03
148	148	75	WB	-0.32	-1.918E-02	6.995E-03
148	148	74	WB	-0.38	-0.22	-0.2
149	149	75	DEAD	72.9	42.67	19.7
149	149	76	DEAD	66.64	21.83	5.35
149	149	392	DEAD	108.53	34.4	7.78
149	149	114	DEAD	114.79	55.24	22.13
149	149	75	LIVE	59.1	38.2	14.36
149	149	76	LIVE	52.62	16.62	1.78
149	149	392	LIVE	95.04	29.35	4.54
149	149	114	LIVE	101.52	50.93	17.13
149	149	75	SX	27.28	269.59	182.59
149	149	76	SX	71.71	62.31	249.72
149	149	392	SX	178.38	103.84	256.42
149	149	114	SX	235.3	327.9	188.59
149	149	75	SY	77.89	547.19	421.12
149	149	76	SY	234.75	113.83	519.11
149	149	392	SY	365.21	185.32	517.42
149	149	114	SY	513.69	707.35	414.7
149	149	75	WB	-0.16	0.53	-0.47
149	149	76	WB	-0.34	-9.242E-02	-0.61
149	149	392	WB	0.6	0.19	-0.49
149	149	114	WB	0.79	0.81	-0.35
150	150	95	DEAD	82.04	24.38	-2.86
150	150	96	DEAD	84.53	32.67	1.14
150	150	76	DEAD	68.45	27.84	-5.43
150	150	75	DEAD	65.96	19.55	-9.42
150	150	95	LIVE	75.94	22.14	-1.28
150	150	96	LIVE	78.38	30.29	1.04
150	150	76	LIVE	54.58	23.14	-5.43
150	150	75	LIVE	52.14	15.	-7.75
150	150	95	SX	290.63	49.56	163.8
150	150	96	SX	311.21	33.92	176.69
150	150	76	SX	71.24	54.03	182.9
150	150	75	SX	59.46	122.77	168.4
150	150	95	SY	640.94	67.22	161.33
150	150	96	SY	658.12	34.21	216.71
150	150	76	SY	202.16	113.96	303.44
150	150	75	SY	184.96	178.88	246.23
150	150	95	WB	0.24	0.15	-2.535E-02
150	150	96	WB	0.27	0.24	-0.15
150	150	76	WB	-0.29	7.498E-02	-0.29
150	150	75	WB	-0.32	-1.941E-02	-0.17

Table 31: Element Forces - Area Shells, Part 1 of 2

Area	AreaElem	Joint	OutputCase	F11	F22	F12
				Kgf/m	Kgf/m	Kgf/m
151	151	76	DEAD	46.85	15.73	17.57
151	151	77	DEAD	51.2	30.24	23.12
151	151	393	DEAD	122.66	51.67	23.55
151	151	115	DEAD	118.31	37.16	18.
151	151	76	LIVE	37.33	11.9	12.84
151	151	77	LIVE	40.64	22.96	19.69
151	151	393	LIVE	105.9	42.53	20.3
151	151	115	LIVE	102.58	31.47	13.44
151	151	76	SX	18.38	72.73	237.35
151	151	77	SX	53.93	85.4	249.32
151	151	393	SX	103.49	42.67	183.89
151	151	115	SX	135.26	99.88	181.39
151	151	76	SY	66.82	120.66	506.02
151	151	77	SY	130.84	175.55	461.26
151	151	393	SY	213.34	76.4	370.15
151	151	115	SY	269.85	171.89	412.75
151	151	76	WB	-0.12	-2.662E-02	-0.52
151	151	77	WB	-0.16	-0.15	-0.36
151	151	393	WB	0.32	-9.333E-03	-0.19
151	151	115	WB	0.36	0.12	-0.35
152	152	96	DEAD	99.96	37.3	-21.94
152	152	97	DEAD	97.3	28.43	-40.93
152	152	77	DEAD	46.06	13.06	-17.73
152	152	76	DEAD	48.72	21.93	1.27
152	152	96	LIVE	91.11	34.1	-18.79
152	152	97	LIVE	88.39	25.05	-35.3
152	152	77	LIVE	36.63	9.52	-15.65
152	152	76	LIVE	39.34	18.57	0.86
152	152	96	SX	179.68	24.25	190.34
152	152	97	SX	202.71	61.5	196.2
152	152	77	SX	38.1	17.44	212.14
152	152	76	SX	20.41	69.86	205.62
152	152	96	SY	517.26	39.46	254.84
152	152	97	SY	568.69	157.26	274.18
152	152	77	SY	86.36	16.69	340.99
152	152	76	SY	37.64	164.06	321.93
152	152	96	WB	0.35	0.27	-0.23
152	152	97	WB	0.28	3.470E-02	-0.29
152	152	77	WB	-0.14	-9.299E-02	-0.31
152	152	76	WB	-7.131E-02	0.14	-0.25
153	153	77	DEAD	6.01	16.57	15.56
153	153	78	DEAD	6.77	19.14	41.22
153	153	394	DEAD	145.63	60.82	60.32
153	153	116	DEAD	144.86	58.24	34.66
153	153	77	LIVE	3.01	11.58	13.69
153	153	78	LIVE	2.88	11.16	35.24
153	153	394	LIVE	124.59	47.69	51.47
153	153	116	LIVE	124.72	48.1	29.9
153	153	77	SX	34.29	83.49	234.9
153	153	78	SX	74.91	217.86	182.46
153	153	394	SX	52.92	180.58	146.09
153	153	116	SX	92.25	47.72	190.65
153	153	77	SY	22.37	146.46	439.38
153	153	78	SY	86.73	359.14	413.83

Table 31: Element Forces - Area Shells, Part 1 of 2

Area	AreaElem	Joint	OutputCase	F11	F22	F12
				Kgf/m	Kgf/m	Kgf/m
153	153	394	SY	77.39	311.96	347.9
153	153	116	SY	140.17	102.42	375.94
153	153	77	WB	-8.468E-02	-0.13	-0.35
153	153	78	WB	-0.16	-0.38	-0.27
153	153	394	WB	9.076E-02	-0.3	-0.11
153	153	116	WB	0.16	-5.742E-02	-0.19
154	154	97	DEAD	130.22	38.3	-39.43
154	154	98	DEAD	138.83	67.01	-53.17
154	154	78	DEAD	9.48	28.21	-44.4
154	154	77	DEAD	0.86	-0.5	-30.67
154	154	97	LIVE	116.64	33.52	-33.98
154	154	98	LIVE	123.48	56.34	-44.73
154	154	78	LIVE	5.83	21.04	-37.11
154	154	77	LIVE	-1.01	-1.77	-26.36
154	154	97	SX	93.28	22.31	182.13
154	154	98	SX	103.88	86.63	170.74
154	154	78	SX	34.56	79.32	177.68
154	154	77	SX	17.25	21.89	189.74
154	154	97	SY	401.58	110.73	262.28
154	154	98	SY	436.	224.03	212.52
154	154	78	SY	26.18	95.55	258.49
154	154	77	SY	38.6	28.91	308.24
154	154	97	WB	0.48	9.439E-02	-0.27
154	154	98	WB	0.46	2.657E-02	-0.25
154	154	78	WB	-8.663E-02	-0.14	-0.29
154	154	77	WB	-6.628E-02	-7.034E-02	-0.31
155	155	4	DEAD	123.98	105.25	62.15
155	155	127	DEAD	102.96	35.18	54.73
155	155	132	DEAD	-36.04	-6.52	31.51
155	155	126	DEAD	-15.02	63.55	38.93
155	155	4	LIVE	105.27	84.91	48.57
155	155	127	LIVE	87.62	26.09	49.38
155	155	132	LIVE	-30.87	-9.45	32.79
155	155	126	LIVE	-13.22	49.36	31.98
155	155	4	SX	54.85	34.42	35.4
155	155	127	SX	81.71	70.17	81.74
155	155	132	SX	19.4	48.13	100.49
155	155	126	SX	44.42	61.96	18.14
155	155	4	SY	24.92	59.2	44.75
155	155	127	SY	36.99	67.22	122.
155	155	132	SY	30.68	69.16	115.66
155	155	126	SY	32.12	67.87	53.02
155	155	4	WB	0.92	0.55	2.367E-02
155	155	127	WB	0.71	-0.16	0.72
155	155	132	WB	-0.23	-0.44	0.87
155	155	126	WB	-1.328E-02	0.27	0.17
156	156	127	DEAD	69.93	25.27	51.1
156	156	129	DEAD	60.95	-4.66	7.7
156	156	133	DEAD	19.69	-17.04	-13.77
156	156	132	DEAD	28.67	12.9	29.63
156	156	127	LIVE	59.36	17.62	52.22
156	156	129	LIVE	50.75	-11.12	6.44
156	156	133	LIVE	14.28	-22.06	-15.17
156	156	132	LIVE	22.9	6.68	30.61

Table 31: Element Forces - Area Shells, Part 1 of 2

Area	AreaElem	Joint	OutputCase	F11	F22	F12
				Kgf/m	Kgf/m	Kgf/m
156	156	127	SX	49.45	62.27	175.14
156	156	129	SX	79.11	174.26	15.32
156	156	133	SX	32.16	142.66	104.26
156	156	132	SX	65.38	30.37	85.08
156	156	127	SY	43.61	72.	225.63
156	156	129	SY	84.14	219.39	21.85
156	156	133	SY	52.66	179.51	166.
156	156	132	SY	96.71	32.27	82.56
156	156	127	WB	0.49	-0.23	1.28
156	156	129	WB	0.3	-0.87	-2.290E-02
156	156	133	WB	-4.829E-02	-0.97	-0.5
156	156	132	WB	0.14	-0.33	0.8
157	157	129	DEAD	53.53	-6.88	-13.85
157	157	130	DEAD	63.01	24.7	-12.65
157	157	134	DEAD	31.36	15.21	-13.74
157	157	133	DEAD	21.89	-16.38	-14.94
157	157	129	LIVE	44.11	-13.11	-14.43
157	157	130	LIVE	54.59	21.84	-8.85
157	157	134	LIVE	25.77	13.19	-12.47
157	157	133	LIVE	15.29	-21.76	-18.05
157	157	129	SX	30.91	142.91	87.79
157	157	130	SX	76.24	10.36	29.88
157	157	134	SX	44.31	9.66	62.92
157	157	133	SX	25.8	154.83	120.97
157	157	129	SY	21.07	193.69	117.66
157	157	130	SY	65.24	13.93	77.88
157	157	134	SY	117.14	14.14	149.67
157	157	133	SY	63.37	177.84	190.03
157	157	129	WB	0.24	-0.88	-0.41
157	157	130	WB	0.57	0.24	0.12
157	157	134	WB	0.18	0.12	-0.2
157	157	133	WB	-0.15	-1.	-0.73
158	158	130	DEAD	85.31	31.39	-29.48
158	158	14	DEAD	100.79	83.01	-43.71
158	158	131	DEAD	1.74	53.29	-38.71
158	158	134	DEAD	-13.75	1.68	-24.48
158	158	130	LIVE	73.23	27.43	-25.78
158	158	14	LIVE	84.78	65.93	-35.94
158	158	131	LIVE	2.982E-03	40.5	-30.77
158	158	134	LIVE	-11.55	2.	-20.61
158	158	130	SX	110.12	19.87	82.81
158	158	14	SX	138.63	145.52	34.83
158	158	131	SX	55.66	129.03	40.39
158	158	134	SX	16.73	11.87	93.23
158	158	130	SY	115.81	15.57	195.36
158	158	14	SY	251.16	470.7	145.11
158	158	131	SY	189.06	452.7	159.39
158	158	134	SY	50.69	10.58	209.57
158	158	130	WB	0.69	0.27	-0.31
158	158	14	WB	0.63	7.722E-02	-0.14
158	158	131	WB	-7.441E-02	-0.13	1.987E-02
158	158	134	WB	-1.593E-02	6.083E-02	-0.15
159	159	126	DEAD	-19.97	47.04	-23.91
159	159	132	DEAD	-33.41	2.24	-20.54

Table 31: Element Forces - Area Shells, Part 1 of 2

Area	AreaElem	Joint	OutputCase	F11	F22	F12
				Kgf/m	Kgf/m	Kgf/m
159	159	123	DEAD	83.45	37.3	-44.11
159	159	2	DEAD	96.89	82.1	-47.49
159	159	126	LIVE	-19.56	28.26	-14.68
159	159	132	LIVE	-28.01	5.866E-02	-16.3
159	159	123	LIVE	70.42	29.59	-35.29
159	159	2	LIVE	78.88	57.79	-33.67
159	159	126	SX	24.02	31.03	57.28
159	159	132	SX	23.08	27.39	41.66
159	159	123	SX	47.28	34.33	49.65
159	159	2	SX	46.79	36.06	65.79
159	159	126	SY	31.62	71.07	31.09
159	159	132	SY	28.41	58.04	115.03
159	159	123	SY	143.72	16.6	138.49
159	159	2	SY	141.17	32.32	33.64
159	159	126	WB	-0.27	-0.59	0.44
159	159	132	WB	-0.12	-0.11	-2.861E-02
159	159	123	WB	8.734E-02	-4.248E-02	-0.11
159	159	2	WB	-5.813E-02	-0.53	0.37
160	160	132	DEAD	31.3	21.65	-22.41
160	160	133	DEAD	26.96	7.21	6.13
160	160	124	DEAD	50.93	14.4	2.25
160	160	123	DEAD	55.27	28.84	-26.3
160	160	132	LIVE	25.75	16.19	-18.48
160	160	133	LIVE	22.73	6.13	7.47
160	160	124	LIVE	44.14	12.55	3.2
160	160	123	LIVE	47.16	22.61	-22.75
160	160	132	SX	71.82	8.98	55.76
160	160	133	SX	76.35	6.98	38.64
160	160	124	SX	15.29	18.49	45.92
160	160	123	SX	17.4	33.42	57.3
160	160	132	SY	100.05	20.32	148.94
160	160	133	SY	107.32	4.82	75.71
160	160	124	SY	46.19	17.45	91.96
160	160	123	SY	40.37	41.25	165.14
160	160	132	WB	0.24	4.456E-03	-9.228E-02
160	160	133	WB	0.27	9.452E-02	0.32
160	160	124	WB	2.440E-02	2.061E-02	0.21
160	160	123	WB	-2.573E-03	-6.946E-02	-0.2
161	161	133	DEAD	29.16	7.87	4.96
161	161	134	DEAD	31.54	15.78	-0.76
161	161	125	DEAD	49.94	21.3	-0.92
161	161	124	DEAD	47.56	13.39	4.8
161	161	133	LIVE	23.74	6.43	4.59
161	161	134	LIVE	25.03	10.73	-2.78
161	161	125	LIVE	43.12	16.15	-1.22
161	161	124	LIVE	41.83	11.86	6.15
161	161	133	SX	43.09	7.87	29.52
161	161	134	SX	48.41	22.92	65.77
161	161	125	SX	25.1	9.26	59.91
161	161	124	SX	29.44	18.54	47.04
161	161	133	SY	115.72	7.53	96.91
161	161	134	SY	138.77	84.44	174.49
161	161	125	SY	54.33	27.93	193.62
161	161	124	SY	77.	50.44	117.63

Table 31: Element Forces - Area Shells, Part 1 of 2

Area	AreaElem	Joint	OutputCase	F11	F22	F12
				Kgf/m	Kgf/m	Kgf/m
161	161	133	WB	0.17	6.325E-02	8.835E-02
161	161	134	WB	0.1	-0.16	-0.24
161	161	125	WB	2.453E-02	-0.18	-4.346E-02
161	161	124	WB	9.037E-02	4.040E-02	0.29
162	162	134	DEAD	-13.57	2.25	-11.5
162	162	131	DEAD	4.49	62.46	29.41
162	162	18	DEAD	85.55	86.78	59.52
162	162	125	DEAD	67.49	26.57	18.61
162	162	134	LIVE	-12.29	-0.47	-10.92
162	162	131	LIVE	2.66	49.36	23.46
162	162	18	LIVE	72.33	70.26	47.54
162	162	125	LIVE	57.38	20.43	13.17
162	162	134	SX	20.99	18.83	95.39
162	162	131	SX	37.71	84.87	23.1
162	162	18	SX	39.93	64.86	38.91
162	162	125	SX	57.59	7.86	45.33
162	162	134	SY	72.63	64.91	234.27
162	162	131	SY	111.43	199.8	98.49
162	162	18	SY	121.48	134.94	40.62
162	162	125	SY	158.57	6.35	143.8
162	162	134	WB	-9.902E-02	-0.22	-0.19
162	162	131	WB	-1.586E-02	6.107E-02	-7.560E-03
162	162	18	WB	0.15	0.11	2.331E-02
162	162	125	WB	6.724E-02	-0.17	-0.16
163	163	118	DEAD	27.94	-52.14	3.58
163	163	51	DEAD	64.24	68.87	5.87
163	163	14	DEAD	87.97	75.98	55.13
163	163	128	DEAD	51.67	-45.02	52.85
163	163	118	LIVE	18.17	-55.89	-2.59
163	163	51	LIVE	50.57	52.1	-1.92
163	163	14	LIVE	73.89	59.1	50.33
163	163	128	LIVE	41.49	-48.9	49.66
163	163	118	SX	88.2	257.81	32.15
163	163	51	SX	22.99	119.96	50.84
163	163	14	SX	135.28	149.95	249.83
163	163	128	SX	33.42	223.89	266.5
163	163	118	SY	214.42	442.29	55.76
163	163	51	SY	30.27	357.83	158.98
163	163	14	SY	215.31	414.5	258.97
163	163	128	SY	32.22	386.02	359.65
163	163	118	WB	-0.26	-1.56	-0.54
163	163	51	WB	0.11	-0.33	-0.7
163	163	14	WB	0.5	-0.22	0.75
163	163	128	WB	0.13	-1.44	0.9
164	164	53	DEAD	63.08	-1.71	-17.57
164	164	136	DEAD	69.19	18.67	-18.43
164	164	318	DEAD	88.28	24.4	-21.73
164	164	54	DEAD	82.16	4.02	-20.87
164	164	53	LIVE	59.8	-0.94	-21.05
164	164	136	LIVE	64.77	15.65	-19.67
164	164	318	LIVE	103.41	27.24	-21.65
164	164	54	LIVE	98.44	10.66	-23.02
164	164	53	SX	239.24	1.79	116.54
164	164	136	SX	235.32	29.94	72.11

Table 31: Element Forces - Area Shells, Part 1 of 2

Area	AreaElem	Joint	OutputCase	F11	F22	F12
				Kgf/m	Kgf/m	Kgf/m
164	164	318	SX	186.58	42.84	18.55
164	164	54	SX	189.66	15.49	45.97
164	164	53	SY	82.92	3.03	189.37
164	164	136	SY	86.85	92.76	174.48
164	164	318	SY	101.81	105.53	57.15
164	164	54	SY	85.91	14.89	71.18
164	164	53	WB	1.13	1.203E-02	-0.67
164	164	136	WB	1.14	2.992E-02	-0.49
164	164	318	WB	3.9	0.86	-0.47
164	164	54	WB	3.89	0.84	-0.65
165	165	136	DEAD	61.02	16.22	-7.6
165	165	137	DEAD	58.76	8.69	6.99
165	165	319	DEAD	76.84	14.11	1.89
165	165	318	DEAD	79.1	21.64	-12.69
165	165	136	LIVE	57.09	13.35	-8.52
165	165	137	LIVE	54.97	6.27	5.11
165	165	319	LIVE	90.97	17.07	-0.26
165	165	318	LIVE	93.09	24.15	-13.9
165	165	136	SX	274.82	15.64	21.86
165	165	137	SX	301.78	90.56	9.98
165	165	319	SX	219.67	62.86	28.96
165	165	318	SX	195.67	39.6	19.35
165	165	136	SY	131.54	55.57	10.25
165	165	137	SY	177.32	122.02	6.99
165	165	319	SY	90.76	79.08	68.94
165	165	318	SY	97.81	99.62	69.27
165	165	136	WB	1.06	5.550E-03	-0.28
165	165	137	WB	1.04	-3.585E-02	-4.354E-02
165	165	319	WB	3.55	0.72	-0.18
165	165	318	WB	3.57	0.76	-0.42
166	166	137	DEAD	67.87	11.42	3.69
166	166	138	DEAD	64.23	-0.7	0.26
166	166	331	DEAD	72.68	1.83	5.22
166	166	319	DEAD	76.31	13.96	8.65
166	166	137	LIVE	66.04	9.59	1.41
166	166	138	LIVE	62.5	-2.18	-1.84
166	166	331	LIVE	84.91	4.54	3.41
166	166	319	LIVE	88.44	16.31	6.66
166	166	137	SX	352.14	105.37	103.46
166	166	138	SX	332.09	41.24	126.07
166	166	331	SX	215.17	13.23	55.72
166	166	319	SX	234.86	68.72	36.27
166	166	137	SY	211.63	131.91	233.5
166	166	138	SY	201.21	99.42	383.7
166	166	331	SY	113.47	67.86	171.74
166	166	319	SY	120.33	97.07	28.05
166	166	137	WB	1.45	8.541E-02	-0.1
166	166	138	WB	1.37	-0.17	-0.18
166	166	331	WB	3.25	0.39	-6.917E-02
166	166	319	WB	3.33	0.65	3.517E-03
167	167	138	DEAD	57.74	-2.65	3.5
167	167	139	DEAD	60.04	5.	1.01
167	167	333	DEAD	72.36	8.7	-1.84
167	167	331	DEAD	70.07	1.05	0.66

Table 31: Element Forces - Area Shells, Part 1 of 2

Area	AreaElem	Joint	OutputCase	F11	F22	F12
				Kgf/m	Kgf/m	Kgf/m
167	167	138	LIVE	57.13	-3.79	1.81
167	167	139	LIVE	59.87	5.34	-0.33
167	167	333	LIVE	80.81	11.63	-3.53
167	167	331	LIVE	78.07	2.49	-1.39
167	167	138	SX	341.37	43.24	66.61
167	167	139	SX	320.26	37.41	42.68
167	167	333	SX	318.69	41.29	83.35
167	167	331	SX	339.35	42.43	109.21
167	167	138	SY	173.03	89.11	237.81
167	167	139	SY	170.97	108.49	73.23
167	167	333	SY	257.12	140.01	206.46
167	167	331	SY	253.31	114.52	385.68
167	167	138	WB	1.38	-0.17	-0.11
167	167	139	WB	1.44	3.610E-02	-5.054E-02
167	167	333	WB	2.78	0.44	-0.13
167	167	331	WB	2.72	0.23	-0.19
168	168	139	DEAD	65.56	6.66	-8.45
168	168	140	DEAD	68.2	15.46	-6.25
168	168	320	DEAD	50.75	10.22	2.06
168	168	333	DEAD	48.11	1.42	-0.14
168	168	139	LIVE	65.58	7.06	-11.27
168	168	140	LIVE	69.28	19.42	-7.21
168	168	320	LIVE	51.27	14.02	3.68
168	168	333	LIVE	47.56	1.65	-0.38
168	168	139	SX	384.8	23.31	111.07
168	168	140	SX	370.66	71.11	30.31
168	168	320	SX	520.48	54.35	101.19
168	168	333	SX	533.75	41.86	26.91
168	168	139	SY	222.33	118.31	155.31
168	168	140	SY	157.32	167.51	80.17
168	168	320	SY	297.29	142.54	45.08
168	168	333	SY	366.08	164.93	59.81
168	168	139	WB	1.71	0.12	-0.29
168	168	140	WB	1.88	0.7	-0.2
168	168	320	WB	1.27	0.52	6.786E-02
168	168	333	WB	1.09	-6.849E-02	-1.815E-02
169	169	119	DEAD	46.52	34.85	-17.48
169	169	120	DEAD	38.4	7.8	-20.56
169	169	137	DEAD	60.48	14.42	2.41
169	169	136	DEAD	68.6	41.48	5.49
169	169	119	LIVE	49.61	34.8	-17.73
169	169	120	LIVE	41.83	8.85	-21.38
169	169	137	LIVE	57.12	13.44	-0.34
169	169	136	LIVE	64.91	39.39	3.31
169	169	119	SX	55.14	107.37	255.59
169	169	120	SX	79.55	54.51	272.77
169	169	137	SX	309.91	121.13	109.37
169	169	136	SX	267.21	43.24	92.14
169	169	119	SY	126.35	181.05	523.78
169	169	120	SY	43.84	149.48	578.72
169	169	137	SY	201.9	211.56	251.08
169	169	136	SY	117.24	118.88	195.86
169	169	119	WB	1.16	0.63	-0.25
169	169	120	WB	1.05	0.27	-0.36

Table 31: Element Forces - Area Shells, Part 1 of 2

Area	AreaElem	Joint	OutputCase	F11	F22	F12
				Kgf/m	Kgf/m	Kgf/m
169	169	137	WB	1.14	0.3	-0.18
169	169	136	WB	1.25	0.66	-7.261E-02
170	170	395	DEAD	-5.41	-4.32	-15.47
170	170	330	DEAD	-7.83	-12.36	0.78
170	170	138	DEAD	67.51	10.24	-2.03
170	170	137	DEAD	69.93	18.29	-18.28
170	170	395	LIVE	-10.06	-5.38	-14.61
170	170	330	LIVE	-12.36	-13.04	-1.87
170	170	138	LIVE	66.33	10.56	-3.83
170	170	137	LIVE	68.63	18.23	-16.58
170	170	395	SX	242.52	80.28	78.45
170	170	330	SX	221.15	28.24	209.87
170	170	138	SX	331.51	33.78	136.23
170	170	137	SX	351.91	104.01	152.43
170	170	395	SY	397.91	197.65	26.26
170	170	330	SY	367.49	96.88	373.49
170	170	138	SY	185.66	38.91	295.3
170	170	137	SY	213.59	138.07	96.03
170	170	395	WB	-0.47	-0.15	-0.29
170	170	330	WB	-0.53	-0.34	-0.15
170	170	138	WB	1.5	0.27	-0.16
170	170	137	WB	1.56	0.46	-0.3
171	171	332	DEAD	2.46	-11.7	-12.56
171	171	396	DEAD	8.36	7.95	22.58
171	171	140	DEAD	71.64	26.94	23.99
171	171	139	DEAD	65.75	7.28	-11.15
171	171	332	LIVE	5.38	-10.33	-18.9
171	171	396	LIVE	12.11	12.13	20.94
171	171	140	LIVE	72.54	30.26	24.8
171	171	139	LIVE	65.8	7.8	-15.04
171	171	332	SX	244.58	137.88	229.
171	171	396	SX	251.12	162.29	139.27
171	171	140	SX	397.64	33.47	75.04
171	171	139	SX	405.09	54.87	155.29
171	171	332	SY	426.02	161.52	382.02
171	171	396	SY	407.42	127.58	73.47
171	171	140	SY	220.09	112.32	94.67
171	171	139	SY	205.33	25.3	236.37
171	171	332	WB	0.14	-0.21	-0.75
171	171	396	WB	0.31	0.36	0.38
171	171	140	WB	1.92	0.85	0.65
171	171	139	WB	1.75	0.27	-0.48
172	172	330	DEAD	13.07	-6.09	-2.53
172	172	332	DEAD	12.26	-8.76	-5.44
172	172	139	DEAD	60.22	5.62	-1.7
172	172	138	DEAD	61.02	8.29	1.21
172	172	330	LIVE	10.81	-6.09	-3.04
172	172	332	LIVE	9.95	-8.95	-6.96
172	172	139	LIVE	60.09	6.09	-4.11
172	172	138	LIVE	60.95	8.95	-0.19
172	172	330	SX	80.47	42.03	64.62
172	172	332	SX	80.22	42.77	75.47
172	172	139	SX	340.63	35.99	86.61
172	172	138	SX	340.83	36.38	75.76

Table 31: Element Forces - Area Shells, Part 1 of 2

Area	AreaElem	Joint	OutputCase	F11	F22	F12
				Kgf/m	Kgf/m	Kgf/m
172	172	330	SY	44.48	16.03	89.12
172	172	332	SY	44.52	32.68	104.74
172	172	139	SY	154.09	14.01	164.5
172	172	138	SY	158.61	28.3	149.3
172	172	330	WB	6.663E-02	-0.16	-7.152E-02
172	172	332	WB	4.219E-02	-0.24	-0.22
172	172	139	WB	1.49	0.19	-0.25
172	172	138	WB	1.51	0.27	-9.519E-02
173	173	52	DEAD	-7.09	-8.85	-30.09
173	173	397	DEAD	-0.41	13.43	0.29
173	173	136	DEAD	74.34	35.85	13.48
173	173	53	DEAD	67.66	13.58	-16.9
173	173	52	LIVE	-9.37	-6.89	-25.56
173	173	397	LIVE	-3.79	11.71	-1.07
173	173	136	LIVE	70.25	33.92	9.64
173	173	53	LIVE	64.67	15.32	-14.84
173	173	52	SX	108.36	66.38	170.29
173	173	397	SX	121.48	107.55	71.04
173	173	136	SX	239.97	23.35	64.29
173	173	53	SX	250.3	38.3	155.03
173	173	52	SY	198.07	44.91	391.49
173	173	397	SY	226.34	137.26	60.82
173	173	136	SY	87.28	74.21	24.53
173	173	53	SY	87.29	26.25	323.09
173	173	52	WB	-0.51	-3.819E-02	-6.739E-02
173	173	397	WB	-0.49	3.480E-02	-0.1
173	173	136	WB	1.3	0.57	-0.1
173	173	53	WB	1.28	0.5	-6.797E-02
174	174	121	DEAD	38.49	18.8	-22.17
174	174	122	DEAD	32.78	-0.23	-2.773E-02
174	174	141	DEAD	52.42	5.66	11.42
174	174	140	DEAD	58.13	24.69	-10.72
174	174	121	LIVE	48.37	26.84	-32.52
174	174	122	LIVE	41.07	2.5	-13.65
174	174	141	LIVE	45.73	3.89	6.68
174	174	140	LIVE	53.03	28.24	-12.19
174	174	121	SX	134.97	128.	457.31
174	174	122	SX	205.61	144.33	392.24
174	174	141	SX	550.28	246.42	125.84
174	174	140	SX	472.5	28.13	191.27
174	174	121	SY	69.24	124.99	771.9
174	174	122	SY	120.63	277.58	648.04
174	174	141	SY	436.39	372.59	290.48
174	174	140	SY	338.05	104.82	414.8
174	174	121	WB	1.77	0.97	-1.09
174	174	122	WB	1.59	0.36	-1.03
174	174	141	WB	0.94	0.17	-0.18
174	174	140	WB	1.12	0.78	-0.24
175	175	140	DEAD	54.09	11.22	6.31
175	175	141	DEAD	52.72	6.68	11.31
175	175	321	DEAD	54.82	7.31	7.8
175	175	320	DEAD	56.18	11.85	2.81
175	175	140	LIVE	48.51	13.19	9.24
175	175	141	LIVE	45.69	3.76	15.31

Table 31: Element Forces - Area Shells, Part 1 of 2

Area	AreaElem	Joint	OutputCase	F11	F22	F12
				Kgf/m	Kgf/m	Kgf/m
175	175	321	LIVE	57.11	7.19	11.51
175	175	320	LIVE	59.94	16.62	5.44
175	175	140	SX	469.07	40.51	112.9
175	175	141	SX	533.19	190.51	29.03
175	175	321	SX	521.42	177.95	21.82
175	175	320	SX	463.4	64.34	103.25
175	175	140	SY	295.06	122.47	69.96
175	175	141	SY	417.12	307.97	116.21
175	175	321	SY	373.73	284.77	67.43
175	175	320	SY	274.	153.57	99.68
175	175	140	WB	1.02	0.44	0.29
175	175	141	WB	0.89	3.531E-03	0.55
175	175	321	WB	1.49	0.18	0.5
175	175	320	WB	1.62	0.62	0.23
176	176	141	DEAD	53.64	6.95	4.99
176	176	142	DEAD	52.31	2.53	0.32
176	176	325	DEAD	61.26	5.21	10.23
176	176	321	DEAD	62.59	9.64	14.91
176	176	141	LIVE	44.73	3.47	6.26
176	176	142	LIVE	44.19	1.66	-0.11
176	176	325	LIVE	62.98	7.29	12.53
176	176	321	LIVE	63.52	9.11	18.9
176	176	141	SX	654.58	225.35	117.24
176	176	142	SX	612.41	84.72	113.14
176	176	325	SX	516.33	48.4	85.62
176	176	321	SX	556.1	187.52	90.38
176	176	141	SY	518.39	337.62	297.45
176	176	142	SY	470.72	180.25	253.37
176	176	325	SY	364.86	148.8	218.1
176	176	321	SY	402.45	292.11	273.16
176	176	141	WB	0.8	-2.217E-02	0.28
176	176	142	WB	0.81	-1.764E-02	6.480E-02
176	176	325	WB	1.68	0.24	0.44
176	176	321	WB	1.67	0.24	0.66
177	177	142	DEAD	41.8	-0.62	4.71
177	177	143	DEAD	42.28	0.98	4.52
177	177	323	DEAD	71.29	9.69	1.62
177	177	325	DEAD	70.81	8.08	1.8
177	177	142	LIVE	34.53	-1.24	4.91
177	177	143	LIVE	35.05	0.49	4.24
177	177	323	LIVE	60.68	8.18	2.15
177	177	325	LIVE	60.16	6.45	2.82
177	177	142	SX	558.02	71.02	70.18
177	177	143	SX	537.97	11.02	113.93
177	177	323	SX	786.11	73.99	150.73
177	177	325	SX	804.49	132.87	105.9
177	177	142	SY	449.86	175.81	155.05
177	177	143	SY	392.32	41.35	245.3
177	177	323	SY	499.21	46.18	330.73
177	177	325	SY	554.29	202.23	235.59
177	177	142	WB	0.54	-9.684E-02	0.18
177	177	143	WB	0.55	-6.797E-02	0.17
177	177	323	WB	1.37	0.18	0.2
177	177	325	WB	1.36	0.15	0.21

Table 31: Element Forces - Area Shells, Part 1 of 2

Area	AreaElem	Joint	OutputCase	F11	F22	F12
				Kgf/m	Kgf/m	Kgf/m
178	178	143	DEAD	40.	0.3	-2.73
178	178	144	DEAD	38.3	-5.36	-4.5
178	178	327	DEAD	72.8	4.99	5.36
178	178	323	DEAD	74.5	10.65	7.12
178	178	143	LIVE	32.23	-0.35	-2.1
178	178	144	LIVE	30.45	-6.31	-4.94
178	178	327	LIVE	62.36	3.27	4.45
178	178	323	LIVE	64.15	9.22	7.28
178	178	143	SX	497.22	21.6	132.63
178	178	144	SX	502.11	4.39	120.85
178	178	327	SX	884.47	112.94	100.86
178	178	323	SX	879.52	96.77	113.12
178	178	143	SY	276.53	71.13	305.58
178	178	144	SY	290.5	19.4	288.74
178	178	327	SY	726.65	116.8	222.77
178	178	323	SY	711.58	67.61	239.04
178	178	143	WB	0.42	-0.11	0.13
178	178	144	WB	0.38	-0.24	-2.805E-02
178	178	327	WB	1.51	0.1	9.413E-02
178	178	323	WB	1.55	0.23	0.25
179	179	144	DEAD	43.85	-3.69	5.99
179	179	145	DEAD	42.06	-9.65	8.11
179	179	329	DEAD	71.52	-0.81	-7.27
179	179	327	DEAD	73.31	5.14	-9.4
179	179	144	LIVE	36.25	-4.56	4.46
179	179	145	LIVE	35.4	-7.38	10.16
179	179	329	LIVE	61.61	0.48	-5.89
179	179	327	LIVE	62.45	3.3	-11.59
179	179	144	SX	529.98	10.65	90.41
179	179	145	SX	495.45	112.11	43.34
179	179	329	SX	926.73	26.21	91.87
179	179	327	SX	961.64	136.84	164.44
179	179	144	SY	232.38	42.59	209.77
179	179	145	SY	211.16	115.6	103.7
179	179	329	SY	907.12	112.86	255.21
179	179	327	SY	928.91	178.26	363.85
179	179	144	WB	0.48	-0.21	2.322E-02
179	179	145	WB	0.54	-1.071E-02	0.38
179	179	329	WB	1.62	0.31	0.12
179	179	327	WB	1.56	0.12	-0.24
180	180	326	DEAD	1.08	-7.03	3.46
180	180	328	DEAD	2.1	-3.62	1.98
180	180	145	DEAD	48.	10.15	7.53
180	180	144	DEAD	46.98	6.74	9.02
180	180	326	LIVE	-8.37	-8.32	8.07
180	180	328	LIVE	-7.46	-5.3	1.98
180	180	145	LIVE	40.33	9.04	3.28
180	180	144	LIVE	39.43	6.02	9.37
180	180	326	SX	159.91	83.21	96.82
180	180	328	SX	163.43	85.36	154.72
180	180	145	SX	548.3	68.77	110.99
180	180	144	SX	546.91	63.11	55.29
180	180	326	SY	421.71	148.52	175.09
180	180	328	SY	426.42	164.48	238.2

Table 31: Element Forces - Area Shells, Part 1 of 2

Area	AreaElem	Joint	OutputCase	F11	F22	F12
				Kgf/m	Kgf/m	Kgf/m
180	180	145	SY	249.99	36.96	177.63
180	180	144	SY	252.54	40.55	114.23
180	180	326	WB	-1.	-0.34	0.61
180	180	328	WB	-1.	-0.32	0.12
180	180	145	WB	0.59	0.16	-0.25
180	180	144	WB	0.58	0.14	0.25
181	181	322	DEAD	16.28	-3.76	4.11
181	181	326	DEAD	16.71	-2.34	7.2
181	181	144	DEAD	41.44	5.08	-1.47
181	181	143	DEAD	41.01	3.66	-4.56
181	181	322	LIVE	7.9	-4.48	2.95
181	181	326	LIVE	8.25	-3.33	7.06
181	181	144	LIVE	33.62	4.28	-2.538E-02
181	181	143	LIVE	33.28	3.14	-4.13
181	181	322	SX	279.8	19.4	10.09
181	181	326	SX	278.99	18.81	40.28
181	181	144	SX	519.15	55.3	86.02
181	181	143	SX	519.83	57.73	56.12
181	181	322	SY	120.02	59.06	26.41
181	181	326	SY	119.43	39.92	64.49
181	181	144	SY	312.79	62.29	192.77
181	181	143	SY	306.9	44.54	148.79
181	181	322	WB	-0.45	-0.19	-1.575E-02
181	181	326	WB	-0.45	-0.17	0.16
181	181	144	WB	0.48	0.1	0.19
181	181	143	WB	0.48	8.811E-02	1.317E-02
182	182	398	DEAD	14.11	-1.59	-6.74
182	182	322	DEAD	13.18	-4.69	-5.88
182	182	143	DEAD	43.29	4.34	2.7
182	182	142	DEAD	44.22	7.45	1.84
182	182	398	LIVE	4.27	-3.37	-7.87
182	182	322	LIVE	3.54	-5.78	-4.94
182	182	143	LIVE	36.1	3.98	2.21
182	182	142	LIVE	36.83	6.4	-0.71
182	182	398	SX	341.47	20.74	56.83
182	182	322	SX	336.65	13.55	41.36
182	182	143	SX	560.56	69.38	36.39
182	182	142	SX	565.52	85.82	124.22
182	182	398	SY	258.36	27.17	146.42
182	182	322	SY	257.85	26.85	14.11
182	182	143	SY	422.88	76.42	89.26
182	182	142	SY	423.41	77.68	239.11
182	182	398	WB	-0.49	-0.22	-0.17
182	182	322	WB	-0.48	-0.2	-2.613E-02
182	182	143	WB	0.61	0.13	5.315E-02
182	182	142	WB	0.6	0.1	-8.695E-02
183	183	399	DEAD	-4.95	-10.	-11.39
183	183	398	DEAD	-4.06	-7.04	0.55
183	183	142	DEAD	54.73	10.6	-2.55
183	183	141	DEAD	53.85	7.64	-14.49
183	183	399	LIVE	-17.14	-12.44	-9.87
183	183	398	LIVE	-16.26	-9.53	-8.7
183	183	142	LIVE	46.48	9.29	-5.73
183	183	141	LIVE	45.6	6.38	-6.91

Table 31: Element Forces - Area Shells, Part 1 of 2

Area	AreaElem	Joint	OutputCase	F11	F22	F12
				Kgf/m	Kgf/m	Kgf/m
183	183	399	SX	424.64	164.58	112.37
183	183	398	SX	387.17	47.73	393.8
183	183	142	SX	619.97	102.16	168.83
183	183	141	SX	655.26	223.22	336.26
183	183	399	SY	664.27	331.74	48.66
183	183	398	SY	604.91	133.39	649.96
183	183	142	SY	444.73	83.3	342.92
183	183	141	SY	502.24	279.87	334.69
183	183	399	WB	-1.	-0.33	-0.17
183	183	398	WB	-1.01	-0.38	-0.54
183	183	142	WB	0.87	0.18	-0.2
183	183	141	WB	0.88	0.23	0.17
184	184	114	DEAD	106.25	26.72	16.63
184	184	392	DEAD	107.87	32.23	-10.95
184	184	152	DEAD	60.46	18.01	-18.05
184	184	154	DEAD	58.77	12.48	9.54
184	184	114	LIVE	92.63	21.24	12.47
184	184	392	LIVE	94.41	27.31	-7.01
184	184	152	LIVE	45.82	12.73	-11.25
184	184	154	LIVE	43.98	6.64	8.22
184	184	114	SX	196.4	184.13	343.27
184	184	392	SX	175.7	70.84	270.59
184	184	152	SX	136.49	82.75	225.52
184	184	154	SX	165.21	191.67	358.2
184	184	114	SY	357.02	248.75	281.27
184	184	392	SY	348.21	100.51	404.14
184	184	152	SY	346.91	144.46	291.74
184	184	154	SY	380.69	302.67	358.55
184	184	114	WB	0.51	-9.996E-02	0.15
184	184	392	WB	0.57	9.475E-02	8.230E-02
184	184	152	WB	-9.695E-02	-0.11	0.36
184	184	154	WB	-0.16	-0.3	0.43
185	185	115	DEAD	117.72	35.31	-4.84
185	185	393	DEAD	115.33	27.23	8.05
185	185	150	DEAD	61.62	11.12	2.27
185	185	152	DEAD	64.04	19.2	-10.62
185	185	115	LIVE	102.01	29.69	-1.59
185	185	393	LIVE	99.76	22.08	6.19
185	185	150	LIVE	46.6	6.13	1.31
185	185	152	LIVE	48.87	13.75	-6.48
185	185	115	SX	131.05	67.81	195.17
185	185	393	SX	91.93	88.27	162.9
185	185	150	SX	75.55	112.31	228.01
185	185	152	SX	103.35	75.23	127.76
185	185	115	SY	251.87	97.58	319.43
185	185	393	SY	188.02	171.08	181.07
185	185	150	SY	171.73	180.84	266.96
185	185	152	SY	246.38	125.97	219.68
185	185	115	WB	0.33	2.413E-02	0.21
185	185	393	WB	0.3	-9.468E-02	0.19
185	185	150	WB	-0.13	-0.22	0.32
185	185	152	WB	-9.540E-02	-0.1	0.34
186	186	116	DEAD	137.65	33.97	14.66
186	186	394	DEAD	139.05	38.85	-10.37

Table 31: Element Forces - Area Shells, Part 1 of 2

Area	AreaElem	Joint	OutputCase	F11	F22	F12
				Kgf/m	Kgf/m	Kgf/m
186	186	148	DEAD	56.05	13.96	-25.22
186	186	150	DEAD	54.59	9.06	-0.19
186	186	116	LIVE	118.69	27.79	12.02
186	186	394	LIVE	119.48	30.63	-8.63
186	186	148	LIVE	41.57	7.27	-21.
186	186	150	LIVE	40.73	4.41	-0.36
186	186	116	SX	79.38	89.65	151.31
186	186	394	SX	58.21	197.89	115.17
186	186	148	SX	45.22	216.18	94.26
186	186	150	SX	50.39	114.82	163.63
186	186	116	SY	113.13	188.38	177.92
186	186	394	SY	67.54	393.3	192.69
186	186	148	SY	36.4	398.03	172.82
186	186	150	SY	98.61	198.46	202.99
186	186	116	WB	0.14	-0.14	0.19
186	186	394	WB	9.213E-02	-0.3	0.13
186	186	148	WB	-0.16	-0.37	0.27
186	186	150	WB	-0.11	-0.22	0.33
187	187	154	DEAD	59.46	14.59	-18.75
187	187	152	DEAD	57.71	8.83	-8.7
187	187	153	DEAD	68.14	11.96	-8.5
187	187	400	DEAD	69.87	17.72	-18.55
187	187	154	LIVE	46.25	14.06	-14.52
187	187	152	LIVE	44.1	6.97	-4.96
187	187	153	LIVE	52.67	9.54	-6.18
187	187	400	LIVE	54.8	16.62	-15.73
187	187	154	SX	132.24	96.69	190.15
187	187	152	SX	118.83	28.63	42.25
187	187	153	SX	303.01	110.71	149.57
187	187	400	SX	273.9	18.79	286.98
187	187	154	SY	392.71	289.03	436.82
187	187	152	SY	321.12	41.5	160.92
187	187	153	SY	536.93	224.77	317.6
187	187	400	SY	458.29	43.62	574.17
187	187	154	WB	3.309E-02	0.33	0.38
187	187	152	WB	-7.263E-02	-2.403E-02	0.39
187	187	153	WB	-0.53	-0.16	0.35
187	187	400	WB	-0.43	0.19	0.33
188	188	152	DEAD	61.16	9.63	-2.91
188	188	150	DEAD	64.12	19.41	-5.2
188	188	151	DEAD	63.27	19.16	-10.22
188	188	401	DEAD	60.32	9.38	-7.93
188	188	152	LIVE	47.05	7.68	-1.58
188	188	150	LIVE	49.37	15.31	-3.88
188	188	151	LIVE	49.41	15.32	-7.43
188	188	401	LIVE	47.11	7.7	-5.13
188	188	152	SX	84.32	17.8	149.71
188	188	150	SX	82.18	9.06	185.6
188	188	151	SX	182.52	58.	152.78
188	188	401	SX	188.31	74.14	119.78
188	188	152	SY	219.7	22.95	291.9
188	188	150	SY	216.2	8.77	354.13
188	188	151	SY	246.79	136.68	378.65
188	188	401	SY	246.8	133.62	319.08

Table 31: Element Forces - Area Shells, Part 1 of 2

Area	AreaElem	Joint	OutputCase	F11	F22	F12
				Kgf/m	Kgf/m	Kgf/m
188	188	152	WB	-6.981E-02	-1.899E-02	0.34
188	188	150	WB	-8.660E-02	-7.619E-02	0.3
188	188	151	WB	-0.28	-0.13	0.34
188	188	401	WB	-0.26	-7.703E-02	0.38
189	189	150	DEAD	57.06	17.2	-6.32
189	189	148	DEAD	57.57	19.1	7.27
189	189	149	DEAD	64.37	21.14	12.77
189	189	402	DEAD	63.83	19.22	-0.82
189	189	150	LIVE	43.47	13.47	-4.71
189	189	148	LIVE	43.77	14.63	6.7
189	189	149	LIVE	50.78	16.73	11.43
189	189	402	LIVE	50.46	15.57	2.380E-02
189	189	150	SX	53.8	11.3	125.4
189	189	148	SX	38.95	99.64	87.42
189	189	149	SX	109.56	129.35	120.9
189	189	402	SX	84.7	26.4	164.35
189	189	150	SY	142.01	23.6	283.19
189	189	148	SY	91.15	197.59	180.01
189	189	149	SY	74.71	241.81	250.18
189	189	402	SY	45.12	67.01	360.58
189	189	150	WB	-6.963E-02	-6.794E-02	0.3
189	189	148	WB	-9.697E-02	-0.16	0.29
189	189	149	WB	-0.11	-0.16	0.27
189	189	402	WB	-8.199E-02	-7.168E-02	0.27
191	191	16	DEAD	108.28	34.58	-28.94
191	191	135	DEAD	60.87	20.68	-27.48
191	191	53	DEAD	53.3	-4.57	-16.42
191	191	54	DEAD	100.81	9.71	-18.82
191	191	16	LIVE	129.25	45.61	-36.73
191	191	135	LIVE	52.22	24.27	-28.78
191	191	53	LIVE	43.2	-5.79	-17.22
191	191	54	LIVE	120.69	17.07	-26.65
191	191	16	SX	165.75	21.69	76.52
191	191	135	SX	201.21	23.03	76.
191	191	53	SX	193.77	12.13	89.28
191	191	54	SX	158.29	30.89	92.22
191	191	16	SY	124.92	38.61	158.03
191	191	135	SY	119.13	39.44	191.81
191	191	53	SY	125.89	29.93	113.63
191	191	54	SY	129.78	44.37	86.19
191	191	16	WB	4.91	1.89	-1.41
191	191	135	WB	0.5	0.73	-0.7
191	191	53	WB	0.2	-0.26	-0.36
191	191	54	WB	4.66	1.03	-1.15
192	192	52	DEAD	-20.57	-14.4	3.01
192	192	405	DEAD	-17.17	-4.59	1.176E-02
192	192	135	DEAD	59.45	17.99	10.48
192	192	53	DEAD	56.78	10.11	14.98
192	192	52	LIVE	-13.87	-9.31	-6.82
192	192	405	LIVE	-9.33	5.05	-5.16
192	192	135	LIVE	50.63	21.66	10.67
192	192	53	LIVE	46.88	9.99	10.17
192	192	52	SX	155.92	42.61	193.89
192	192	405	SX	133.55	16.73	38.31

Table 31: Element Forces - Area Shells, Part 1 of 2

Area	AreaElem	Joint	OutputCase	F11	F22	F12
				Kgf/m	Kgf/m	Kgf/m
192	192	135	SX	210.36	59.78	90.13
192	192	53	SX	214.27	32.85	128.66
192	192	52	SY	382.73	157.14	390.86
192	192	405	SY	309.59	36.66	57.69
192	192	135	SY	164.38	207.07	95.67
192	192	53	SY	110.01	14.32	250.29
192	192	52	WB	0.27	0.21	-1.03
192	192	405	WB	0.44	0.84	-0.5
192	192	135	WB	0.47	0.74	0.27
192	192	53	WB	0.31	0.23	-0.26
194	194	145	DEAD	37.01	-6.34	-3.54
194	194	146	DEAD	65.89	89.91	-14.73
194	194	44	DEAD	92.63	67.45	12.74
194	194	329	DEAD	69.14	-10.85	24.78
194	194	145	LIVE	17.06	-8.06	-0.39
194	194	146	LIVE	51.32	106.13	-11.69
194	194	44	LIVE	92.43	82.98	21.59
194	194	329	LIVE	64.8	-9.11	34.76
194	194	145	SX	599.4	158.27	64.99
194	194	146	SX	673.77	115.7	355.77
194	194	44	SX	1075.82	455.24	205.94
194	194	329	SX	979.01	138.29	88.23
194	194	145	SY	191.94	263.62	180.32
194	194	146	SY	212.88	169.58	767.33
194	194	44	SY	1306.31	561.85	494.88
194	194	329	SY	1240.53	334.22	44.06
194	194	145	WB	-1.	-0.45	0.27
194	194	146	WB	8.661E-02	3.17	0.4
194	194	44	WB	3.19	3.16	1.4
194	194	329	WB	2.32	0.28	1.49
195	195	328	DEAD	-16.34	-18.07	1.
195	195	407	DEAD	-13.37	-7.69	18.83
195	195	146	DEAD	52.22	31.81	3.61
195	195	145	DEAD	47.43	15.09	-9.06
195	195	328	LIVE	-10.64	-11.57	-16.25
195	195	407	LIVE	1.89	30.33	5.85
195	195	146	LIVE	38.15	50.87	6.58
195	195	145	LIVE	26.37	10.98	-12.36
195	195	328	SX	506.56	273.56	184.04
195	195	407	SX	311.09	402.07	145.89
195	195	146	SX	731.25	596.5	41.63
195	195	145	SX	595.24	75.69	169.04
195	195	328	SY	1021.64	390.73	206.25
195	195	407	SY	599.15	1030.63	106.3
195	195	146	SY	357.83	1142.19	46.41
195	195	145	SY	228.57	211.3	305.23
195	195	328	WB	0.1	0.24	-1.76
195	195	407	WB	1.29	4.17	-1.01
195	195	146	WB	-1.764E-02	2.97	0.38
195	195	145	WB	-0.96	-0.19	-0.44
196	196	44	DEAD	74.22	112.98	-62.89
196	196	146	DEAD	52.64	89.94	-26.33
196	196	147	DEAD	25.88	1.27	-22.45
196	196	408	DEAD	40.32	3.04	-58.23

Table 31: Element Forces - Area Shells, Part 1 of 2

Area	AreaElem	Joint	OutputCase	F11	F22	F12
				Kgf/m	Kgf/m	Kgf/m
196	196	44	LIVE	55.68	133.03	-70.93
196	196	146	LIVE	43.35	102.67	-12.89
196	196	147	LIVE	12.6	1.35	-11.06
196	196	408	LIVE	13.78	-2.86	-70.23
196	196	44	SX	3185.41	872.57	764.58
196	196	146	SX	313.14	191.26	543.82
196	196	147	SX	260.76	49.76	266.56
196	196	408	SX	3393.11	1337.74	862.23
196	196	44	SY	3990.3	1008.67	1402.25
196	196	146	SY	794.48	523.1	1375.59
196	196	147	SY	588.34	158.24	483.74
196	196	408	SY	4369.02	1886.18	1025.8
196	196	44	WB	1.43	4.35	-1.05
196	196	146	WB	0.12	2.69	1.5
196	196	147	WB	-0.7	3.123E-03	0.97
196	196	408	WB	0.2	0.19	-1.52
197	197	50	DEAD	75.47	8.9	-25.87
197	197	48	DEAD	83.93	16.89	-10.73
197	197	154	DEAD	85.76	23.94	-18.21
197	197	155	DEAD	78.26	19.2	-32.47
197	197	50	LIVE	58.81	5.67	-21.95
197	197	48	LIVE	62.87	11.2	-9.18
197	197	154	LIVE	65.58	20.92	-14.97
197	197	155	LIVE	62.33	18.15	-27.15
197	197	50	SX	363.56	83.17	135.38
197	197	48	SX	223.61	143.28	85.9
197	197	154	SX	218.09	160.58	382.45
197	197	155	SX	346.93	41.03	348.63
197	197	50	SY	678.79	138.94	317.44
197	197	48	SY	519.57	297.57	284.17
197	197	154	SY	535.67	413.12	749.81
197	197	155	SY	622.92	26.54	759.76
197	197	50	WB	-0.62	-0.21	-2.890E-02
197	197	48	WB	-0.31	-6.067E-02	5.976E-02
197	197	154	WB	-0.21	0.29	0.43
197	197	155	WB	-0.51	0.17	0.36
198	198	149	DEAD	79.67	25.69	20.36
198	198	148	DEAD	39.21	13.74	12.51
198	198	38	DEAD	36.32	3.45	6.72
198	198	40	DEAD	76.72	15.53	14.64
198	198	149	LIVE	64.18	20.71	16.97
198	198	148	LIVE	28.28	10.12	10.76
198	198	38	LIVE	24.78	-2.21	5.25
198	198	40	LIVE	60.61	8.47	11.51
198	198	149	SX	50.75	109.46	73.85
198	198	148	SX	34.86	95.48	100.2
198	198	38	SX	10.78	168.07	86.38
198	198	40	SX	51.16	179.85	65.49
198	198	149	SY	94.53	197.63	148.2
198	198	148	SY	87.31	197.87	172.96
198	198	38	SY	45.01	353.41	153.67
198	198	40	SY	70.46	356.36	131.95
198	198	149	WB	7.655E-03	-0.13	0.23
198	198	148	WB	-9.044E-02	-0.15	0.23

Table 31: Element Forces - Area Shells, Part 1 of 2

Area	AreaElem	Joint	OutputCase	F11	F22	F12
				Kgf/m	Kgf/m	Kgf/m
198	198	38	WB	-3.139E-02	2.871E-02	0.15
198	198	40	WB	6.546E-02	5.359E-02	0.16
199	199	148	DEAD	38.95	8.99	-25.85
199	199	117	DEAD	179.5	51.15	-18.03
199	199	36	DEAD	183.71	66.91	4.83
199	199	38	DEAD	43.4	24.82	-2.97
199	199	148	LIVE	27.29	3.11	-21.88
199	199	117	LIVE	154.29	41.22	-15.31
199	199	36	LIVE	157.67	53.98	3.33
199	199	38	LIVE	30.87	15.94	-3.22
199	199	148	SX	28.43	211.56	104.91
199	199	117	SX	52.86	195.07	104.55
199	199	36	SX	30.67	371.98	95.04
199	199	38	SX	68.56	388.38	90.44
199	199	148	SY	30.79	396.74	166.49
199	199	117	SY	24.45	399.19	172.31
199	199	36	SY	90.52	756.16	160.8
199	199	38	SY	82.32	753.71	147.92
199	199	148	WB	-0.14	-0.37	0.22
199	199	117	WB	6.708E-02	-0.31	0.15
199	199	36	WB	-5.541E-02	-0.71	6.697E-02
199	199	38	WB	-0.27	-0.77	0.13
200	200	117	DEAD	177.66	72.01	56.6
200	200	78	DEAD	-51.06	-1.24	49.99
200	200	79	DEAD	-49.44	6.15	64.71
200	200	36	DEAD	179.08	78.69	67.15
200	200	117	LIVE	151.7	57.24	48.02
200	200	78	LIVE	-44.59	-5.8	43.19
200	200	79	LIVE	-43.55	-0.57	54.97
200	200	36	LIVE	152.62	61.98	56.19
200	200	117	SX	58.63	179.01	136.66
200	200	78	SX	53.49	210.8	153.7
200	200	79	SX	105.68	388.82	105.11
200	200	36	SX	16.95	361.46	83.21
200	200	117	SY	65.8	315.69	340.51
200	200	78	SY	33.88	330.21	378.13
200	200	79	SY	107.06	607.8	180.1
200	200	36	SY	26.55	595.64	151.43
200	200	117	WB	2.491E-02	-0.31	-0.11
200	200	78	WB	-0.13	-0.37	-0.18
200	200	79	WB	-0.2	-0.6	-6.237E-02
200	200	36	WB	-4.874E-02	-0.54	7.434E-03
201	201	78	DEAD	-55.43	6.08	-31.43
201	201	98	DEAD	172.14	79.54	-73.31
201	201	34	DEAD	179.29	103.38	-105.79
201	201	79	DEAD	-49.84	24.72	-59.37
201	201	78	LIVE	-47.32	2.74	-25.82
201	201	98	LIVE	151.45	67.11	-60.37
201	201	34	LIVE	155.13	79.37	-87.2
201	201	79	LIVE	-44.93	10.7	-48.63
201	201	78	SX	16.1	71.03	144.16
201	201	98	SX	95.68	58.47	149.23
201	201	34	SX	78.05	115.73	105.95
201	201	79	SX	34.25	141.75	103.12

Table 31: Element Forces - Area Shells, Part 1 of 2

Area	AreaElem	Joint	OutputCase	F11	F22	F12
				Kgf/m	Kgf/m	Kgf/m
201	201	78	SY	59.52	75.32	203.12
201	201	98	SY	326.73	197.35	168.78
201	201	34	SY	304.48	169.38	161.5
201	201	79	SY	85.69	126.11	198.2
201	201	78	WB	-7.009E-02	-0.14	-0.19
201	201	98	WB	0.58	7.374E-02	-0.23
201	201	34	WB	0.56	1.554E-02	-0.25
201	201	79	WB	-8.918E-02	-0.2	-0.2
202	202	48	DEAD	91.94	22.14	2.58
202	202	46	DEAD	-35.02	-15.95	-9.16
202	202	409	DEAD	-35.15	-16.31	9.83
202	202	154	DEAD	91.76	21.76	21.57
202	202	48	LIVE	69.47	18.2	3.86
202	202	46	LIVE	-16.59	-7.61	-3.65
202	202	409	LIVE	-17.62	-11.03	18.14
202	202	154	LIVE	68.38	14.77	25.65
202	202	48	SX	362.46	215.65	312.08
202	202	46	SX	265.95	45.41	222.94
202	202	409	SX	275.61	25.27	662.74
202	202	154	SX	349.79	177.9	386.65
202	202	48	SY	802.84	472.28	528.03
202	202	46	SY	309.74	222.09	913.66
202	202	409	SY	322.3	43.52	1105.32
202	202	154	SY	732.44	253.09	1193.61
202	202	48	WB	-0.18	6.142E-02	0.35
202	202	46	WB	1.19	0.47	0.21
202	202	409	WB	1.12	0.25	1.05
202	202	154	WB	-0.24	-0.16	1.19
203	203	46	DEAD	-17.54	34.86	-14.97
203	203	113	DEAD	194.91	91.9	-7.76
203	203	114	DEAD	183.02	49.72	-80.08
203	203	409	DEAD	-31.6	-11.55	-94.52
203	203	46	LIVE	-0.78	38.66	-29.27
203	203	113	LIVE	165.14	86.01	-29.25
203	203	114	LIVE	150.26	34.33	-82.97
203	203	409	LIVE	-16.85	-14.78	-88.66
203	203	46	SX	248.41	1699.7	493.56
203	203	113	SX	694.39	1646.63	802.55
203	203	114	SX	360.12	540.93	524.02
203	203	409	SX	192.96	529.1	865.05
203	203	46	SY	734.88	3081.54	754.27
203	203	113	SY	1226.19	3180.51	914.69
203	203	114	SY	465.7	876.83	1364.67
203	203	409	SY	85.29	869.89	1504.22
203	203	46	WB	1.74	2.3	-1.82
203	203	113	WB	0.91	2.3	-2.29
203	203	114	WB	-3.724E-03	-0.77	-2.43
203	203	409	WB	0.87	-0.63	-1.93
204	204	42	DEAD	175.29	49.1	21.46
204	204	113	DEAD	199.56	100.69	-32.62
204	204	46	DEAD	40.95	40.35	0.58
204	204	410	DEAD	47.54	-5.68	53.95
204	204	42	LIVE	150.62	74.76	16.04
204	204	113	LIVE	160.38	90.05	-43.75

Table 31: Element Forces - Area Shells, Part 1 of 2

Area	AreaElem	Joint	OutputCase	F11	F22	F12
				Kgf/m	Kgf/m	Kgf/m
204	204	46	LIVE	-1.68	32.18	-12.61
204	204	410	LIVE	23.65	21.9	48.99
204	204	42	SX	449.03	399.26	560.38
204	204	113	SX	890.43	1609.5	866.08
204	204	46	SX	1668.86	1665.57	837.95
204	204	410	SX	1023.96	478.67	521.65
204	204	42	SY	628.4	1067.84	631.01
204	204	113	SY	1103.53	3007.28	922.14
204	204	46	SY	1364.2	2485.36	854.91
204	204	410	SY	730.7	454.31	1391.63
204	204	42	WB	0.76	3.85	2.493E-02
204	204	113	WB	-2.464E-02	1.91	-1.66
204	204	46	WB	-3.16	1.03	-1.07
204	204	410	WB	-1.32	3.01	0.79
205	205	146	DEAD	48.1	86.59	-84.86
205	205	410	DEAD	2.27	49.16	-48.61
205	205	46	DEAD	14.05	-4.57	-11.17
205	205	147	DEAD	28.15	1.08	-42.31
205	205	146	LIVE	42.44	96.2	-58.3
205	205	410	LIVE	-9.03	61.64	-25.7
205	205	46	LIVE	-10.54	-6.67	-2.75
205	205	147	LIVE	18.33	2.59	-28.2
205	205	146	SX	245.09	431.07	463.76
205	205	410	SX	744.47	705.61	506.11
205	205	46	SX	718.86	155.22	320.15
205	205	147	SX	391.81	199.15	321.33
205	205	146	SY	562.44	401.37	1222.02
205	205	410	SY	623.55	613.94	1374.81
205	205	46	SY	1135.58	126.07	741.71
205	205	147	SY	810.51	270.43	701.73
205	205	146	WB	0.52	2.95	1.25
205	205	410	WB	-0.94	2.65	1.47
205	205	46	WB	-2.28	-0.45	0.68
205	205	147	WB	-0.48	8.637E-03	0.83
206	206	16	DEAD	-8.93	-2.39	-50.68
206	206	411	DEAD	1.76	36.52	3.17
206	206	14	DEAD	106.55	67.	23.48
206	206	135	DEAD	87.41	28.47	-29.31
206	206	16	LIVE	-13.26	2.63	-50.39
206	206	411	LIVE	-7.76	22.65	2.12
206	206	14	LIVE	94.36	52.73	17.34
206	206	135	LIVE	80.48	32.39	-33.76
206	206	16	SX	104.12	42.65	91.55
206	206	411	SX	142.49	114.74	86.35
206	206	14	SX	377.07	177.19	125.77
206	206	135	SX	314.28	47.12	71.67
206	206	16	SY	128.91	39.65	300.83
206	206	411	SY	232.15	367.66	92.03
206	206	14	SY	356.65	395.57	131.68
206	206	135	SY	196.95	46.93	265.64
206	206	16	WB	-0.78	0.29	-1.16
206	206	411	WB	-1.03	-0.68	-8.816E-02
206	206	14	WB	1.31	5.620E-02	-0.12
206	206	135	WB	1.38	0.96	-1.13

Table 31: Element Forces - Area Shells, Part 1 of 2

Area	AreaElem	Joint	OutputCase	F11	F22	F12
				Kgf/m	Kgf/m	Kgf/m
207	207	14	DEAD	103.97	82.17	1.61
207	207	51	DEAD	46.79	66.	-18.67
207	207	12	DEAD	30.42	7.78	-33.21
207	207	135	DEAD	86.23	26.18	-13.07
207	207	14	LIVE	92.5	65.83	-3.41
207	207	51	LIVE	31.57	48.02	-11.63
207	207	12	LIVE	22.09	14.71	-20.21
207	207	135	LIVE	82.11	33.29	-11.52
207	207	14	SX	363.04	213.01	64.49
207	207	51	SX	59.13	115.67	142.46
207	207	12	SX	82.99	44.82	171.7
207	207	135	SX	326.65	85.89	100.48
207	207	14	SY	301.34	446.22	214.51
207	207	51	SY	75.23	380.47	390.28
207	207	12	SY	35.45	63.02	532.56
207	207	135	SY	196.77	146.64	360.04
207	207	14	WB	1.29	2.752E-02	-0.51
207	207	51	WB	-0.36	-0.5	0.42
207	207	12	WB	2.487E-02	0.91	0.7
207	207	135	WB	1.68	1.32	-0.16
208	208	160	DEAD	-26.	-46.55	46.61
208	208	412	DEAD	-23.22	-43.54	-16.26
208	208	159	DEAD	-34.61	-45.21	-16.08
208	208	264	DEAD	-25.92	-44.9	46.79
208	208	160	LIVE	-19.82	-42.77	62.58
208	208	412	LIVE	-15.	-28.8	3.95
208	208	159	LIVE	13.14	-19.7	7.98
208	208	264	LIVE	19.13	-29.93	67.1
208	208	160	SX	185.88	67.55	60.43
208	208	412	SX	195.45	106.4	87.09
208	208	159	SX	95.46	73.02	52.18
208	208	264	SX	79.78	31.58	24.37
208	208	160	SY	83.27	122.8	81.36
208	208	412	SY	86.57	54.66	102.94
208	208	159	SY	79.47	38.66	56.33
208	208	264	SY	108.52	125.68	39.61
208	208	160	WB	0.35	-0.49	2.81
208	208	412	WB	0.55	0.53	1.87
208	208	159	WB	3.98	1.47	2.21
208	208	264	WB	3.96	0.56	3.21
209	209	159	DEAD	-40.03	-93.85	22.56
209	209	180	DEAD	-5.28	-83.62	66.93
209	209	162	DEAD	10.01	-32.	89.38
209	209	264	DEAD	-22.95	-47.97	45.38
209	209	159	LIVE	6.79	-63.16	47.62
209	209	180	LIVE	13.98	-59.47	70.77
209	209	162	LIVE	21.64	-39.61	89.91
209	209	264	LIVE	16.92	-46.05	67.04
209	209	159	SX	91.09	102.57	20.53
209	209	180	SX	92.53	106.8	61.96
209	209	162	SX	76.93	40.6	107.65
209	209	264	SX	68.54	35.2	74.36
209	209	159	SY	110.3	166.92	57.03
209	209	180	SY	47.27	149.89	130.34

Table 31: Element Forces - Area Shells, Part 1 of 2

Area	AreaElem	Joint	OutputCase	F11	F22	F12
				Kgf/m	Kgf/m	Kgf/m
209	209	162	SY	69.04	60.52	151.62
209	209	264	SY	76.52	21.37	61.95
209	209	159	WB	3.85	1.2	3.18
209	209	180	WB	2.16	0.87	1.8
209	209	162	WB	1.63	-1.57	1.85
209	209	264	WB	3.41	-1.04	3.22

Table 32: Element Stresses - Area Shells, Part 1 of 3

Table 32: Element Stresses - Area Shells, Part 1 of 3

Area	AreaElem	Joint	OutputCase	S11Top	S22Top	S12Top
				Kgf/m2	Kgf/m2	Kgf/m2
1	1	304	DEAD	-63800.65	-14093.	-18605.8
1	1	317	DEAD	55034.96	21557.69	-2901.74
1	1	316	DEAD	52874.64	14356.6	-2898.84
1	1	303	DEAD	-65960.97	-21294.08	-18602.91
1	1	304	LIVE	-97832.28	-22198.88	-34898.82
1	1	317	LIVE	100624.01	37338.01	-7527.05
1	1	316	LIVE	96640.23	24058.76	-7080.12
1	1	303	LIVE	-101816.05	-35478.12	-34451.88
1	1	304	SX	16115.39	4056.82	8508.47
1	1	317	SX	25261.57	8044.35	4837.91
1	1	316	SX	24460.34	5362.68	3931.83
1	1	303	SX	16851.23	6678.4	8850.4
1	1	304	SY	67889.24	14707.09	26637.51
1	1	317	SY	82544.63	30398.23	12024.27
1	1	316	SY	79330.83	19630.56	10351.18
1	1	303	SY	71125.23	25449.76	25517.06
1	1	304	WB	-4872.99	-1140.29	-2158.24
1	1	317	WB	6066.23	2141.47	-576.24
1	1	316	WB	5820.2	1321.39	-514.56
1	1	303	WB	-5119.01	-1960.37	-2096.55
2	2	303	DEAD	-105822.93	-33252.67	-3345.37
2	2	316	DEAD	112065.11	32113.75	-6340.98
2	2	315	DEAD	112039.55	32028.54	-3934.04
2	2	302	DEAD	-105848.49	-33337.87	-938.42
2	2	303	LIVE	-194811.75	-63376.83	-8068.01
2	2	316	LIVE	218514.32	60620.99	-12909.97
2	2	315	LIVE	218687.36	61197.79	-8304.45
2	2	302	LIVE	-194638.71	-62800.03	-3462.48
2	2	303	SX	50431.91	17062.97	4217.64
2	2	316	SX	65744.21	17717.92	5238.22
2	2	315	SX	65768.42	17785.23	5255.74
2	2	302	SX	50418.63	17000.32	3543.38
2	2	303	SY	156054.77	51033.13	8891.15
2	2	316	SY	183982.49	50967.55	10351.54
2	2	315	SY	184190.66	51667.46	7680.19
2	2	302	SY	155839.05	50321.88	6178.24
2	2	303	WB	-11653.35	-3920.67	-534.78
2	2	316	WB	13714.64	3689.72	-801.81
2	2	315	WB	13744.9	3790.57	-511.06
2	2	302	WB	-11623.09	-3819.82	-244.03

Table 32: Element Stresses - Area Shells, Part 1 of 3

Area	AreaElem	Joint	OutputCase	S11Top	S22Top	S12Top
				Kgf/m2	Kgf/m2	Kgf/m2
3	3	302	DEAD	-109479.27	-34427.11	-613.01
3	3	315	DEAD	123168.11	35367.11	-1586.91
3	3	314	DEAD	123134.04	35253.52	11.43
3	3	301	DEAD	-109513.35	-34540.7	985.33
3	3	302	LIVE	-212164.39	-68057.73	-1136.58
3	3	315	LIVE	245580.11	69265.62	-3382.31
3	3	314	LIVE	245584.59	69280.54	245.83
3	3	301	LIVE	-212159.91	-68042.81	2491.56
3	3	302	SX	72382.64	23651.55	4532.83
3	3	315	SX	86858.51	24145.17	3390.97
3	3	314	SX	87107.92	24972.48	2156.06
3	3	301	SX	72136.7	22827.65	4520.6
3	3	302	SY	173713.67	55793.48	5613.15
3	3	315	SY	207414.9	58546.28	5702.53
3	3	314	SY	207529.38	58927.28	4287.11
3	3	301	SY	173599.58	55412.49	6571.48
3	3	302	WB	-13105.13	-4264.44	-59.31
3	3	315	WB	15543.66	4330.2	-222.78
3	3	314	WB	15548.23	4345.43	1.03
3	3	301	WB	-13100.56	-4249.21	164.5
4	4	314	DEAD	115423.14	32940.25	4400.54
4	4	313	DEAD	115322.86	32605.98	7190.59
4	4	300	DEAD	-107102.28	-34121.56	1922.83
4	4	301	DEAD	-107002.	-33787.29	-867.22
4	4	314	LIVE	224355.43	62911.79	10039.65
4	4	313	LIVE	223902.66	61402.54	15221.82
4	4	300	LIVE	-198139.25	-65210.03	5006.63
4	4	301	LIVE	-197686.47	-63700.78	-175.54
4	4	314	SX	89329.42	25609.31	6325.82
4	4	313	SX	88944.55	24338.05	8009.6
4	4	300	SX	79168.22	26055.54	880.75
4	4	301	SX	78793.01	24789.25	2307.9
4	4	314	SY	187883.71	53077.23	10882.96
4	4	313	SY	187177.12	50721.17	14533.04
4	4	300	SY	157947.99	52815.19	4433.47
4	4	301	SY	157236.06	50444.	4630.27
4	4	314	WB	14164.2	3930.22	642.4
4	4	313	WB	14109.48	3747.84	970.76
4	4	300	WB	-11984.69	-4080.41	301.28
4	4	301	WB	-11929.97	-3898.03	-27.07
5	5	300	DEAD	-68541.1	-22553.21	21933.19
5	5	313	DEAD	55562.47	14677.86	510.23
5	5	312	DEAD	57978.79	22732.25	311.
5	5	296	DEAD	-66124.78	-14498.82	21733.96
5	5	300	LIVE	-105126.08	-37306.08	41443.72
5	5	313	LIVE	100589.89	24408.71	1646.74
5	5	312	LIVE	104993.07	39085.97	1536.49
5	5	296	LIVE	-100722.9	-22628.82	41333.48
5	5	300	SX	41163.91	14557.57	20197.36
5	5	313	SX	41140.66	10003.86	3462.41
5	5	312	SX	43232.24	16985.57	4502.97
5	5	296	SX	39093.88	7599.15	20072.71
5	5	300	SY	70469.01	26496.14	36519.37
5	5	313	SY	80654.37	18789.22	2961.65

Table 32: Element Stresses - Area Shells, Part 1 of 3

Area	AreaElem	Joint	OutputCase	S11Top	S22Top	S12Top
				Kgf/m2	Kgf/m2	Kgf/m2
5	5	312	SY	84365.73	31213.52	4133.19
5	5	296	SY	66737.41	14101.29	36583.58
5	5	300	WB	-5303.39	-2076.02	2595.43
5	5	313	WB	6085.39	1340.62	131.38
5	5	312	WB	6359.98	2255.94	155.52
5	5	296	WB	-5028.79	-1160.69	2619.57
6	6	184	DEAD	-313.38	-9098.95	5592.62
6	6	185	DEAD	2601.72	618.03	5236.9
6	6	228	DEAD	-6275.6	-2045.16	7133.37
6	6	161	DEAD	-9190.7	-11762.15	7489.09
6	6	184	LIVE	-2432.29	-13278.38	7063.71
6	6	185	LIVE	2060.83	1698.71	9235.64
6	6	228	LIVE	-2286.05	394.64	10508.78
6	6	161	LIVE	-6779.18	-14582.44	8336.85
6	6	184	SX	4694.66	5165.06	1850.01
6	6	185	SX	3235.	1110.35	2305.83
6	6	228	SX	7151.72	3127.	3825.28
6	6	161	SX	5700.75	2236.03	2440.43
6	6	184	SY	2756.04	5391.87	1734.37
6	6	185	SY	1767.38	3766.66	9742.91
6	6	228	SY	4544.88	3566.08	6664.72
6	6	161	SY	3678.24	4000.37	4286.49
6	6	184	WB	-256.44	-725.67	289.56
6	6	185	WB	-5.31	111.45	547.84
6	6	228	WB	326.11	210.88	533.23
6	6	161	WB	74.97	-626.25	274.96
7	7	163	DEAD	-9307.82	-5191.51	-4048.2
7	7	209	DEAD	-9012.65	-4207.64	-2537.62
7	7	185	DEAD	2159.51	-855.99	3.49
7	7	184	DEAD	1864.35	-1839.86	-1507.09
7	7	163	LIVE	-8445.48	-1252.83	-1276.69
7	7	209	LIVE	-9294.92	-4084.28	-766.51
7	7	185	LIVE	1277.45	-912.57	1840.82
7	7	184	LIVE	2126.89	1918.89	1330.64
7	7	163	SX	2931.6	2293.98	638.72
7	7	209	SX	3518.53	1491.36	3915.04
7	7	185	SX	3266.83	785.84	1837.3
7	7	184	SX	4315.05	3922.89	1950.29
7	7	163	SY	6962.48	4880.24	3226.34
7	7	209	SY	6243.42	1921.07	3876.62
7	7	185	SY	1752.96	3182.43	2547.35
7	7	184	SY	2112.89	4706.35	3699.87
7	7	163	WB	-129.59	226.91	180.21
7	7	209	WB	-224.82	-90.52	115.26
7	7	185	WB	-50.18	-38.12	190.92
7	7	184	WB	45.05	279.3	255.87
8	8	185	DEAD	-3196.98	-1121.58	4959.82
8	8	186	DEAD	-2696.48	546.75	1202.55
8	8	229	DEAD	-1736.83	834.64	2982.5
8	8	228	DEAD	-2237.33	-833.68	6739.77
8	8	185	LIVE	-3856.79	-76.58	8763.31
8	8	186	LIVE	-2999.11	2782.35	1559.13
8	8	229	LIVE	2460.8	4420.32	4265.75
8	8	228	LIVE	1603.12	1561.39	11469.92

Table 32: Element Stresses - Area Shells, Part 1 of 3

Area	AreaElem	Joint	OutputCase	S11Top	S22Top	S12Top
				Kgf/m2	Kgf/m2	Kgf/m2
8	8	185	SX	3920.24	996.58	2080.85
8	8	186	SX	3433.81	3658.89	4932.49
8	8	229	SX	4898.78	5191.73	3905.87
8	8	228	SX	4288.74	2319.01	3555.76
8	8	185	SY	2681.77	3014.2	9144.11
8	8	186	SY	1984.85	12845.24	7817.57
8	8	229	SY	4138.22	13125.51	2782.84
8	8	228	SY	4141.79	3625.15	15286.62
8	8	185	WB	-165.71	63.33	519.37
8	8	186	WB	-110.2	248.38	51.56
8	8	229	WB	449.22	416.2	187.88
8	8	228	WB	393.7	231.16	655.69
9	9	209	DEAD	-6864.23	-3563.11	-1311.7
9	9	210	DEAD	-6125.51	-1100.68	363.85
9	9	186	DEAD	-2900.45	-133.17	1401.97
9	9	185	DEAD	-3639.18	-2595.59	-273.58
9	9	209	LIVE	-8022.92	-3702.68	-62.61
9	9	210	LIVE	-7238.96	-1089.48	2395.06
9	9	186	LIVE	-3856.21	-74.65	3826.17
9	9	185	LIVE	-4640.17	-2687.85	1368.49
9	9	209	SX	1776.23	695.67	2453.39
9	9	210	SX	1932.28	699.15	1358.45
9	9	186	SX	4023.05	643.2	901.67
9	9	185	SX	3972.58	764.23	1836.11
9	9	209	SY	5232.11	1660.8	3555.7
9	9	210	SY	6022.89	1529.67	3805.73
9	9	186	SY	3449.05	679.54	4483.26
9	9	185	SY	2752.37	2336.67	3171.46
9	9	209	WB	-271.19	-104.43	102.64
9	9	210	WB	-245.8	-19.81	234.65
9	9	186	WB	-185.2	-1.63	294.46
9	9	185	WB	-210.58	-86.25	162.45
10	10	186	DEAD	-4908.81	-116.95	1017.57
10	10	187	DEAD	-5381.4	-1692.25	1850.22
10	10	230	DEAD	1133.28	262.15	2689.7
10	10	229	DEAD	1605.87	1837.45	1857.05
10	10	186	LIVE	-4769.27	2251.3	787.99
10	10	187	LIVE	-6131.82	-2290.53	3456.72
10	10	230	LIVE	3380.82	563.26	5146.32
10	10	229	LIVE	4743.37	5105.1	2477.59
10	10	186	SX	2679.66	3743.28	5779.21
10	10	187	SX	3548.39	1362.52	3243.46
10	10	230	SX	2544.6	527.22	3851.47
10	10	229	SX	3606.26	4937.03	6023.29
10	10	186	SY	1725.65	12849.13	9222.74
10	10	187	SY	3611.23	1868.63	2832.84
10	10	230	SY	5091.67	1656.75	4366.39
10	10	229	SY	4972.06	13161.02	6400.98
10	10	186	WB	-105.41	249.81	-15.5
10	10	187	WB	-211.64	-104.28	205.29
10	10	230	WB	286.13	45.05	312.39
10	10	229	WB	392.36	399.15	91.6
11	11	210	DEAD	-5877.48	-1026.28	530.
11	11	211	DEAD	-6076.52	-1689.75	452.64

Table 32: Element Stresses - Area Shells, Part 1 of 3

Area	AreaElem	Joint	OutputCase	S11Top	S22Top	S12Top
				Kgf/m2	Kgf/m2	Kgf/m2
11	11	187	DEAD	-5311.83	-1460.34	1139.63
11	11	186	DEAD	-5112.79	-796.87	1216.99
11	11	210	LIVE	-8401.93	-1438.37	2735.5
11	11	211	LIVE	-8187.78	-724.54	1626.89
11	11	187	LIVE	-5412.22	108.13	1946.41
11	11	186	LIVE	-5626.37	-605.7	3055.02
11	11	210	SX	3411.41	524.4	1962.53
11	11	211	SX	3204.42	1155.79	2022.42
11	11	187	SX	3162.41	1376.6	2088.58
11	11	186	SX	3273.51	424.08	1131.87
11	11	210	SY	7670.84	1933.73	5295.69
11	11	211	SY	5770.87	4727.01	3213.93
11	11	187	SY	1659.24	6043.56	3152.03
11	11	186	SY	3280.79	625.43	3468.25
11	11	210	WB	-397.13	-65.21	255.4
11	11	211	WB	-356.09	71.58	138.54
11	11	187	WB	-139.38	136.59	110.54
11	11	186	WB	-180.42	-0.19	227.4
12	12	187	DEAD	-4792.94	-1515.72	1717.21
12	12	188	DEAD	-6669.92	-7772.32	606.52
12	12	231	DEAD	1092.72	-5443.52	435.82
12	12	230	DEAD	2969.7	813.07	1546.51
12	12	187	LIVE	-5799.53	-2190.84	3663.29
12	12	188	LIVE	-6909.6	-5891.1	3000.55
12	12	231	LIVE	5256.84	-2241.16	2517.48
12	12	230	LIVE	6366.92	1459.09	3180.21
12	12	187	SX	1280.99	640.8	2984.88
12	12	188	SX	1970.69	3801.7	4592.57
12	12	231	SX	3465.35	3989.17	6718.86
12	12	230	SX	3057.7	1206.1	5093.18
12	12	187	SY	3437.81	1662.06	3615.06
12	12	188	SY	1980.57	11898.	7674.76
12	12	231	SY	3530.82	11886.14	6996.35
12	12	230	SY	4534.78	1637.66	3464.47
12	12	187	WB	-217.79	-106.12	238.59
12	12	188	WB	-174.89	36.88	263.44
12	12	231	WB	482.28	234.04	223.29
12	12	230	WB	439.38	91.03	198.44
13	13	211	DEAD	-6888.46	-1933.33	1857.43
13	13	212	DEAD	-7066.93	-2528.23	2207.01
13	13	188	DEAD	-4901.84	-1878.7	1356.19
13	13	187	DEAD	-4723.37	-1283.8	1006.62
13	13	211	LIVE	-9703.71	-1179.32	2298.06
13	13	212	LIVE	-10204.97	-2850.19	2507.15
13	13	188	LIVE	-5581.19	-1463.05	2362.07
13	13	187	LIVE	-5079.93	207.82	2152.98
13	13	211	SX	6032.47	1648.68	2154.33
13	13	212	SX	6437.4	2322.3	2337.68
13	13	188	SX	1297.47	841.07	1878.71
13	13	187	SX	1100.17	1615.21	1886.38
13	13	211	SY	8466.76	4315.51	3644.
13	13	212	SY	9625.2	1228.71	3732.72
13	13	188	SY	2568.27	1669.8	3384.54
13	13	187	SY	1928.32	6163.04	3271.51

Table 32: Element Stresses - Area Shells, Part 1 of 3

Area	AreaElem	Joint	OutputCase	S11Top	S22Top	S12Top
				Kgf/m2	Kgf/m2	Kgf/m2
13	13	211	WB	-453.97	42.22	90.21
13	13	212	WB	-492.65	-86.72	82.45
13	13	188	WB	-184.21	5.81	136.08
13	13	187	WB	-145.53	134.75	143.84
14	14	188	DEAD	-2784.3	-6606.63	1377.72
14	14	189	DEAD	-4232.51	-11433.99	-1090.11
14	14	232	DEAD	-564.5	-10333.59	219.35
14	14	231	DEAD	883.71	-5506.23	2687.19
14	14	188	LIVE	-3487.26	-4864.39	3290.91
14	14	189	LIVE	-5116.59	-10295.48	117.65
14	14	232	LIVE	2212.92	-8096.63	779.78
14	14	231	LIVE	3842.25	-2665.54	3953.03
14	14	188	SX	537.33	3286.71	5080.29
14	14	189	SX	393.47	2771.25	4652.46
14	14	232	SX	7074.53	4783.15	5100.02
14	14	231	SX	7024.51	5016.18	4855.18
14	14	188	SY	799.5	11569.54	8087.44
14	14	189	SY	1516.95	7247.73	4584.19
14	14	232	SY	4083.98	7925.02	11127.81
14	14	231	SY	4761.79	12320.24	3811.67
14	14	188	WB	-138.18	47.9	228.86
14	14	189	WB	-188.95	-121.35	98.49
14	14	232	WB	303.65	26.43	52.78
14	14	231	WB	354.43	195.68	183.15
15	15	172	DEAD	-4813.93	166.12	2595.57
15	15	173	DEAD	-4010.51	94.39	2322.94
15	15	284	DEAD	-4476.2	-1560.55	1765.89
15	15	285	DEAD	-5323.28	-1559.64	1988.94
15	15	172	LIVE	-3289.63	486.22	1631.38
15	15	173	LIVE	-2553.79	764.96	1227.11
15	15	284	LIVE	-2738.55	207.09	1579.86
15	15	285	LIVE	-3487.14	-160.41	2040.64
15	15	172	SX	4469.93	4098.15	13885.92
15	15	173	SX	18222.31	7161.33	12530.72
15	15	284	SX	15683.42	10842.74	6410.25
15	15	285	SX	6573.65	10931.47	6655.82
15	15	172	SY	12052.91	5155.04	26964.5
15	15	173	SY	6653.31	4587.62	24930.57
15	15	284	SY	7799.26	28084.08	9862.16
15	15	285	SY	11953.69	20864.11	10925.73
15	15	172	WB	46.73	-27.94	-40.32
15	15	173	WB	54.3	3.16	-63.55
15	15	284	WB	88.02	129.13	7.48
15	15	285	WB	82.14	93.75	40.12
16	16	212	DEAD	-9229.08	-3176.87	1485.85
16	16	213	DEAD	-12051.33	-12584.35	7660.92
16	16	189	DEAD	-3838.46	-10120.49	8302.47
16	16	188	DEAD	-1016.22	-713.01	2127.39
16	16	212	LIVE	-12495.75	-3537.42	1774.59
16	16	213	LIVE	-14994.45	-11866.42	7567.32
16	16	189	LIVE	-4657.55	-8765.35	8445.16
16	16	188	LIVE	-2158.85	-436.35	2652.43
16	16	212	SX	9491.52	3215.77	2730.35
16	16	213	SX	9680.83	3872.62	3603.

Table 32: Element Stresses - Area Shells, Part 1 of 3

Area	AreaElem	Joint	OutputCase	S11Top	S22Top	S12Top
				Kgf/m2	Kgf/m2	Kgf/m2
16	16	189	SX	900.18	897.3	2385.64
16	16	188	SX	1078.07	361.36	2207.66
16	16	212	SY	11998.43	1937.71	3781.1
16	16	213	SY	11889.04	2657.84	5342.56
16	16	189	SY	2937.89	2514.2	6192.97
16	16	188	SY	3230.29	1484.01	3939.96
16	16	212	WB	-554.	-105.12	62.96
16	16	213	WB	-579.83	-191.22	153.58
16	16	189	WB	-173.33	-69.27	192.13
16	16	188	WB	-147.5	16.83	101.51
17	17	213	DEAD	-13871.43	-13130.38	17742.21
17	17	164	DEAD	-17896.02	-26545.69	11578.42
17	17	190	DEAD	-1742.76	-21699.71	1883.72
17	17	189	DEAD	2281.83	-8284.4	8047.5
17	17	213	LIVE	-16758.91	-12395.76	16928.16
17	17	164	LIVE	-20698.29	-25527.02	10814.14
17	17	190	LIVE	-3179.49	-20271.38	1812.36
17	17	189	LIVE	759.89	-7140.12	7926.38
17	17	213	SX	12816.4	4825.65	4376.56
17	17	164	SX	12111.71	2736.64	3202.38
17	17	190	SX	3186.93	2604.16	3229.53
17	17	189	SX	2349.64	613.99	3134.88
17	17	213	SY	14038.11	3522.82	9401.22
17	17	164	SY	15927.38	9764.44	5745.69
17	17	190	SY	5048.58	7357.27	7074.69
17	17	189	SY	2263.57	2728.33	4567.46
17	17	213	WB	-611.9	-200.84	295.07
17	17	164	WB	-691.41	-465.87	164.48
17	17	190	WB	-194.45	-316.78	24.12
17	17	189	WB	-114.94	-51.75	154.7
18	18	189	DEAD	1887.78	-9597.9	-1345.08
18	18	190	DEAD	906.97	-12867.25	1655.34
18	18	162	DEAD	-2964.03	-14028.55	-6829.14
18	18	232	DEAD	-1983.23	-10759.21	-9829.55
18	18	189	LIVE	300.85	-8670.25	-401.12
18	18	190	LIVE	-445.42	-11157.82	1376.68
18	18	162	LIVE	393.08	-10906.26	-4652.83
18	18	232	LIVE	1139.35	-8418.7	-6430.63
18	18	189	SX	1838.22	2401.12	4003.28
18	18	190	SX	1264.43	5869.76	3463.81
18	18	162	SX	11205.2	8899.74	7543.32
18	18	232	SX	10460.27	5709.39	8917.55
18	18	189	SY	1099.35	7487.8	7690.23
18	18	190	SY	2993.17	18877.42	10108.28
18	18	162	SY	5112.65	18764.34	7488.76
18	18	232	SY	4848.03	7544.87	10260.75
18	18	189	WB	-130.56	-103.83	61.07
18	18	190	WB	-123.01	-78.66	-0.37
18	18	162	WB	314.56	52.61	85.61
18	18	232	WB	307.01	27.44	147.05
19	19	190	DEAD	809.71	-12896.43	871.39
19	19	191	DEAD	2089.55	-8630.32	7785.33
19	19	233	DEAD	-6775.22	-11289.75	15922.43
19	19	162	DEAD	-8055.06	-15555.86	9008.49

Table 32: Element Stresses - Area Shells, Part 1 of 3

Area	AreaElem	Joint	OutputCase	S11Top	S22Top	S12Top
				Kgf/m2	Kgf/m2	Kgf/m2
19	19	190	LIVE	170.28	-10973.1	787.83
19	19	191	LIVE	976.43	-8285.96	7920.52
19	19	233	LIVE	-4954.98	-10065.38	15472.25
19	19	162	LIVE	-5761.13	-12752.53	8339.55
19	19	190	SX	7096.86	7834.54	3528.27
19	19	191	SX	5922.43	2995.24	4211.44
19	19	233	SX	5642.1	1652.77	6127.32
19	19	162	SX	5122.87	5853.24	5261.8
19	19	190	SY	3840.46	18089.1	9116.02
19	19	191	SY	6001.33	2972.22	10855.43
19	19	233	SY	10750.86	7105.57	19713.47
19	19	162	SY	15223.23	22501.19	17815.63
19	19	190	WB	-45.44	-55.39	4.47
19	19	191	WB	-71.54	-142.38	162.03
19	19	233	WB	60.25	-102.84	260.88
19	19	162	WB	86.34	-15.85	103.32
20	20	191	DEAD	-5442.97	-10890.08	6968.32
20	20	192	DEAD	-3639.89	-4879.8	-2248.83
20	20	234	DEAD	-1873.47	-4349.88	-620.34
20	20	233	DEAD	-3676.55	-10360.15	8596.81
20	20	191	LIVE	-6150.61	-10424.07	6947.44
20	20	192	LIVE	-4580.03	-5188.82	-1714.91
20	20	234	LIVE	-30.07	-3823.84	-95.47
20	20	233	LIVE	-1600.65	-9059.08	8566.88
20	20	191	SX	5340.32	2923.42	4692.06
20	20	192	SX	4747.14	1608.88	4524.34
20	20	234	SX	2935.46	2015.05	5146.4
20	20	233	SX	2479.54	1251.3	5142.23
20	20	191	SY	3863.2	4244.75	13382.82
20	20	192	SY	4277.63	4921.94	11989.22
20	20	234	SY	5290.6	3977.68	11189.61
20	20	233	SY	7031.41	5868.42	12565.42
20	20	191	WB	-183.74	-176.04	124.13
20	20	192	WB	-172.56	-138.77	-7.16
20	20	234	WB	156.93	-39.93	28.18
20	20	233	WB	145.75	-77.19	159.48
21	21	192	DEAD	-8583.51	-6362.89	-1755.35
21	21	193	DEAD	-8130.64	-4853.34	1861.94
21	21	235	DEAD	-428.36	-2542.65	3574.81
21	21	234	DEAD	-881.23	-4052.21	-42.48
21	21	192	LIVE	-9241.08	-6587.14	-1278.56
21	21	193	LIVE	-8880.9	-5386.53	1840.01
21	21	235	LIVE	644.85	-2528.81	4074.67
21	21	234	LIVE	284.66	-3729.41	956.09
21	21	192	SX	2706.41	1220.67	4143.17
21	21	193	SX	3035.86	1604.66	3342.91
21	21	235	SX	1982.66	1600.42	3394.21
21	21	234	SX	1771.39	1604.73	3893.32
21	21	192	SY	2258.93	4067.16	9982.14
21	21	193	SY	2480.77	4114.13	7320.33
21	21	235	SY	2327.95	3991.59	4421.72
21	21	234	SY	2475.5	4160.38	7025.88
21	21	192	WB	-245.09	-160.53	-0.44
21	21	193	WB	-242.17	-150.8	22.29

Table 32: Element Stresses - Area Shells, Part 1 of 3

Area	AreaElem	Joint	OutputCase	S11Top	S22Top	S12Top
				Kgf/m2	Kgf/m2	Kgf/m2
21	21	235	WB	105.83	-46.4	111.54
21	21	234	WB	102.91	-56.13	88.8
22	22	193	DEAD	-5888.19	-4180.6	2172.77
22	22	194	DEAD	-7278.11	-8813.68	-4221.85
22	22	236	DEAD	-3776.62	-7763.23	-4096.53
22	22	235	DEAD	-2386.7	-3130.15	2298.08
22	22	193	LIVE	-7253.6	-4898.34	2276.19
22	22	194	LIVE	-8358.14	-8580.17	-2380.82
22	22	236	LIVE	-2271.62	-6754.21	-2358.49
22	22	235	LIVE	-1167.07	-3072.39	2298.52
22	22	193	SX	601.15	1053.57	2877.02
22	22	194	SX	826.88	465.25	2629.63
22	22	236	SX	7031.95	2439.	4384.64
22	22	235	SX	7115.44	2888.91	4202.12
22	22	193	SY	1075.15	4172.21	5529.66
22	22	194	SY	1479.24	2264.2	3176.57
22	22	236	SY	3199.33	2053.44	2807.39
22	22	235	SY	2886.74	3953.11	6544.13
22	22	193	WB	-266.78	-158.19	40.37
22	22	194	WB	-260.81	-138.29	101.57
22	22	236	WB	82.24	-35.38	93.84
22	22	235	WB	76.27	-55.27	32.64
23	23	194	DEAD	-658.53	-6827.81	-4035.75
23	23	195	DEAD	-3607.02	-16656.12	731.28
23	23	177	DEAD	-8982.94	-18268.89	-7103.16
23	23	236	DEAD	-6034.45	-8440.58	-11870.18
23	23	194	LIVE	-2928.68	-6951.33	-2174.58
23	23	195	LIVE	-5044.49	-14004.05	764.52
23	23	177	LIVE	-6335.92	-14391.48	-5943.35
23	23	236	LIVE	-4220.1	-7338.75	-8882.45
23	23	194	SX	3138.1	757.78	2625.65
23	23	195	SX	2987.66	2228.85	3007.12
23	23	177	SX	12174.35	5296.22	5283.01
23	23	236	SX	11856.76	3886.25	5565.06
23	23	194	SY	1680.41	2210.67	3121.41
23	23	195	SY	3880.11	8221.05	5583.89
23	23	177	SY	5556.66	8511.13	4549.91
23	23	236	SY	3982.23	2637.05	3772.41
23	23	194	WB	-264.86	-139.51	108.27
23	23	195	WB	-232.38	-31.22	8.24
23	23	177	WB	99.43	68.32	-18.97
23	23	236	WB	66.94	-39.97	81.07
24	24	285	DEAD	-3915.82	-1221.57	1612.82
24	24	284	DEAD	-3547.03	-1110.93	1648.67
24	24	282	DEAD	-3580.91	-1185.66	1361.78
24	24	283	DEAD	-3955.64	-1298.08	1325.75
24	24	285	LIVE	-2549.09	166.83	2237.59
24	24	284	LIVE	-1467.61	491.28	1875.02
24	24	282	LIVE	-1890.41	-949.19	1475.6
24	24	283	LIVE	-2980.18	-1276.12	1834.52
24	24	285	SX	5608.08	8787.75	3857.81
24	24	284	SX	10809.27	11033.99	6291.11
24	24	282	SX	10549.81	2516.08	4783.88
24	24	283	SX	7959.47	931.83	2453.37

Table 32: Element Stresses - Area Shells, Part 1 of 3

Area	AreaElem	Joint	OutputCase	S11Top	S22Top	S12Top
				Kgf/m2	Kgf/m2	Kgf/m2
24	24	285	SY	14818.53	17851.96	6529.79
24	24	284	SY	18184.25	27241.05	6632.28
24	24	282	SY	12312.08	6008.41	5953.36
24	24	283	SY	20611.66	4053.66	5895.16
24	24	285	WB	54.25	96.49	74.41
24	24	284	WB	119.25	115.99	36.31
24	24	282	WB	84.27	-5.86	14.86
24	24	283	WB	18.83	-25.49	52.65
25	25	164	DEAD	-14267.11	-25457.01	-10451.66
25	25	214	DEAD	-10528.33	-12994.41	-19676.63
25	25	191	DEAD	1898.76	-9266.28	-8125.21
25	25	190	DEAD	-1840.02	-21728.89	1099.76
25	25	164	LIVE	-19453.71	-25153.64	-9884.82
25	25	214	LIVE	-15821.13	-13045.05	-18520.98
25	25	191	LIVE	1068.79	-7978.07	-7412.64
25	25	190	LIVE	-2563.79	-20086.67	1223.51
25	25	164	SX	4093.	2851.6	5005.62
25	25	214	SX	3740.85	1637.37	6934.
25	25	191	SX	5401.33	1125.48	3561.37
25	25	190	SX	5243.63	1509.98	3198.62
25	25	164	SY	6182.39	7391.05	7906.18
25	25	214	SY	4240.03	2043.	7331.
25	25	191	SY	6171.9	1261.94	5646.96
25	25	190	SY	8648.82	8277.19	6293.
25	25	164	WB	-869.6	-519.33	-171.79
25	25	214	WB	-799.62	-286.04	-305.24
25	25	191	WB	-46.89	-60.23	-104.5
25	25	190	WB	-116.88	-293.51	28.96
26	26	214	DEAD	-8560.87	-12404.17	-9196.74
26	26	215	DEAD	-5727.53	-2959.71	177.31
26	26	192	DEAD	-2800.42	-2081.58	431.83
26	26	191	DEAD	-5633.76	-11526.04	-8942.21
26	26	214	LIVE	-13967.91	-12489.08	-8757.58
26	26	215	LIVE	-11410.66	-3964.92	45.51
26	26	192	LIVE	-3500.99	-1592.02	417.36
26	26	191	LIVE	-6058.24	-10116.18	-8385.73
26	26	214	SX	1238.75	685.88	4960.79
26	26	215	SX	1201.79	169.52	4766.82
26	26	192	SX	4917.63	1433.54	4542.08
26	26	191	SX	4772.86	1001.8	4628.4
26	26	214	SY	4870.15	1526.28	5521.03
26	26	215	SY	5205.71	768.12	6178.27
26	26	192	SY	3605.42	1286.08	8792.83
26	26	191	SY	3484.29	2432.25	7781.13
26	26	214	WB	-768.36	-276.66	-154.47
26	26	215	WB	-736.25	-169.64	-18.27
26	26	192	WB	-126.98	13.14	-6.19
26	26	191	WB	-159.09	-93.88	-142.39
27	27	215	DEAD	-3510.01	-2294.46	399.97
27	27	216	DEAD	-3426.7	-2016.75	-2140.43
27	27	193	DEAD	-7660.73	-3286.96	-1615.09
27	27	192	DEAD	-7744.04	-3564.67	925.31
27	27	215	LIVE	-9275.89	-3324.49	249.62
27	27	216	LIVE	-9156.8	-2927.51	-1939.98

Table 32: Element Stresses - Area Shells, Part 1 of 3

Area	AreaElem	Joint	OutputCase	S11Top	S22Top	S12Top
				Kgf/m2	Kgf/m2	Kgf/m2
27	27	193	LIVE	-8042.94	-2593.35	-1335.9
27	27	192	LIVE	-8162.04	-2990.34	853.7
27	27	215	SX	5425.78	1493.51	5483.23
27	27	216	SX	5265.37	954.47	5167.65
27	27	193	SX	2788.63	395.07	3498.34
27	27	192	SX	2964.69	879.52	3840.69
27	27	215	SY	7354.66	1590.8	6490.86
27	27	216	SY	7451.47	1498.74	5349.09
27	27	193	SY	2806.33	569.53	5483.6
27	27	192	SY	3179.17	2067.31	6905.51
27	27	215	WB	-692.52	-156.52	-20.73
27	27	216	WB	-687.52	-139.86	-33.98
27	27	193	WB	-194.51	8.04	-12.72
27	27	192	WB	-199.51	-8.62	0.53
28	28	216	DEAD	-4238.97	-2260.43	-1589.46
28	28	217	DEAD	-5908.35	-7825.05	6034.6
28	28	194	DEAD	-7087.66	-8178.84	6319.8
28	28	193	DEAD	-5418.28	-2614.23	-1304.26
28	28	216	LIVE	-9844.57	-3133.84	-1430.33
28	28	217	LIVE	-11265.52	-7870.33	5380.74
28	28	194	LIVE	-7836.59	-6841.65	5911.36
28	28	193	LIVE	-6415.64	-2105.16	-899.72
28	28	216	SX	10883.69	2640.52	4842.21
28	28	217	SX	11129.54	3509.62	5966.56
28	28	194	SX	725.42	478.57	4242.65
28	28	193	SX	852.1	704.14	3253.47
28	28	216	SY	11287.44	2400.39	4986.23
28	28	217	SY	11314.2	2590.15	5667.25
28	28	194	SY	1685.75	1054.62	4886.69
28	28	193	SY	1679.88	866.26	4251.52
28	28	216	WB	-681.99	-138.2	-22.21
28	28	217	WB	-685.21	-148.94	33.93
28	28	194	WB	-222.35	-10.08	61.51
28	28	193	WB	-219.13	0.66	5.36
29	29	217	DEAD	-7931.75	-8432.07	13733.01
29	29	165	DEAD	-11357.52	-19851.3	7827.45
29	29	195	DEAD	-3893.85	-17612.2	600.33
29	29	194	DEAD	-468.08	-6192.97	6505.9
29	29	217	LIVE	-12872.5	-8352.43	12380.95
29	29	165	LIVE	-16202.23	-19451.51	6935.77
29	29	195	LIVE	-5736.85	-16311.9	672.41
29	29	194	LIVE	-2407.12	-5212.81	6117.59
29	29	217	SX	16526.87	5132.54	6461.15
29	29	165	SX	15562.18	2845.3	5375.83
29	29	195	SX	3896.03	4334.1	3173.95
29	29	194	SX	3096.47	696.21	4169.34
29	29	217	SY	15241.19	3766.79	5569.59
29	29	165	SY	14805.36	9798.67	5012.08
29	29	195	SY	2341.6	9889.32	3626.5
29	29	194	SY	1990.23	1164.62	4771.24
29	29	217	WB	-674.23	-145.65	97.7
29	29	165	WB	-724.52	-313.26	39.96
29	29	195	WB	-276.68	-178.91	10.47
29	29	194	WB	-226.4	-11.3	68.21

Table 32: Element Stresses - Area Shells, Part 1 of 3

Area	AreaElem	Joint	OutputCase	S11Top	S22Top	S12Top
				Kgf/m2	Kgf/m2	Kgf/m2
30	30	195	DEAD	-4881.51	-17038.46	419.26
30	30	196	DEAD	-1499.83	-5766.21	5355.77
30	30	237	DEAD	-4915.4	-6790.88	11633.63
30	30	177	DEAD	-8297.08	-18063.13	6697.12
30	30	195	LIVE	-6065.64	-14310.39	109.62
30	30	196	LIVE	-3801.2	-6762.26	4282.22
30	30	237	LIVE	-2872.28	-6483.59	9545.92
30	30	177	LIVE	-5136.72	-14031.72	5373.32
30	30	195	SX	6871.13	4152.41	3182.46
30	30	196	SX	5380.62	4333.71	3869.53
30	30	237	SX	13073.24	7682.99	6107.22
30	30	177	SX	11801.67	2756.52	5605.28
30	30	195	SY	7144.91	8928.69	6971.68
30	30	196	SY	4260.99	15608.28	9341.99
30	30	237	SY	8911.87	17012.81	12666.72
30	30	177	SY	7379.89	8227.16	10236.8
30	30	195	WB	-228.89	-30.17	-31.8
30	30	196	WB	-281.23	-204.66	-23.25
30	30	237	WB	105.43	-88.66	-13.06
30	30	177	WB	157.77	85.82	-21.6
31	31	196	DEAD	-7220.55	-7482.42	5653.68
31	31	197	DEAD	-7039.59	-6879.22	-4240.23
31	31	238	DEAD	-2566.05	-5537.16	-3637.52
31	31	237	DEAD	-2747.01	-6140.36	6256.39
31	31	196	LIVE	-8403.56	-8142.97	4540.63
31	31	197	LIVE	-8226.28	-7552.04	-3957.53
31	31	238	LIVE	-1448.39	-5518.67	-2815.69
31	31	237	LIVE	-1625.67	-6109.6	5682.47
31	31	196	SX	1417.7	4402.91	3469.27
31	31	197	SX	1828.21	3085.44	2510.87
31	31	238	SX	4728.9	4680.99	6185.34
31	31	237	SX	5114.93	6075.34	4853.68
31	31	196	SY	3100.02	14352.25	7264.81
31	31	197	SY	4125.31	10790.89	1630.61
31	31	238	SY	6455.17	13736.05	9923.68
31	31	237	SY	7486.99	17320.98	3846.26
31	31	196	WB	-272.31	-201.98	-20.86
31	31	197	WB	-268.12	-187.99	-48.55
31	31	238	WB	61.15	-89.21	15.44
31	31	237	WB	56.95	-103.2	43.12
32	32	197	DEAD	-1042.95	-5080.23	-4072.12
32	32	198	DEAD	-4656.93	-17126.83	1570.45
32	32	178	DEAD	-8120.07	-18165.77	-4537.36
32	32	238	DEAD	-4506.09	-6119.17	-10179.93
32	32	197	LIVE	-2944.27	-5967.43	-3597.86
32	32	198	LIVE	-5532.35	-14594.36	1570.36
32	32	178	LIVE	-6090.55	-14761.82	-3434.38
32	32	238	LIVE	-3502.47	-6134.89	-8602.6
32	32	197	SX	4491.05	3950.67	2826.71
32	32	198	SX	4219.73	2447.64	4031.94
32	32	178	SX	3607.44	3275.75	7513.59
32	32	238	SX	3664.75	4289.6	6460.72
32	32	197	SY	3339.71	11204.33	3116.23
32	32	198	SY	7689.49	5966.41	10073.5

Table 32: Element Stresses - Area Shells, Part 1 of 3

Area	AreaElem	Joint	OutputCase	S11Top	S22Top	S12Top
				Kgf/m2	Kgf/m2	Kgf/m2
32	32	178	SY	4450.72	3979.12	12789.8
32	32	238	SY	8789.51	14532.5	5971.58
32	32	197	WB	-242.18	-180.21	-26.89
32	32	198	WB	-201.26	-43.81	24.54
32	32	178	WB	61.99	35.17	31.92
32	32	238	WB	21.07	-101.23	-19.51
33	33	165	DEAD	-11042.65	-19756.84	-5251.47
33	33	218	DEAD	-6805.6	-5633.35	-10158.2
33	33	196	DEAD	-931.29	-3871.06	-4618.41
33	33	195	DEAD	-5168.33	-17994.55	288.32
33	33	165	LIVE	-16778.22	-19624.31	-4888.15
33	33	218	LIVE	-12700.48	-6031.83	-8985.25
33	33	196	LIVE	-2680.25	-3025.77	-4079.59
33	33	195	LIVE	-6757.99	-16618.24	17.51
33	33	165	SX	3183.98	3167.82	6381.45
33	33	218	SX	3645.59	1663.5	7507.42
33	33	196	SX	5750.25	488.47	4476.05
33	33	195	SX	5356.98	2508.18	3557.82
33	33	165	SY	8158.69	7265.39	4984.93
33	33	218	SY	10307.11	1438.66	5291.36
33	33	196	SY	4837.1	1210.86	4414.01
33	33	195	SY	4082.01	9226.04	4177.71
33	33	165	WB	-802.12	-336.54	-61.21
33	33	218	WB	-743.51	-141.18	-63.7
33	33	196	WB	-214.59	17.49	-32.05
33	33	195	WB	-273.19	-177.87	-29.56
34	34	218	DEAD	-5665.89	-5291.44	-4434.19
34	34	219	DEAD	-5737.97	-5531.7	6389.76
34	34	197	DEAD	-6724.09	-5827.54	6503.45
34	34	196	DEAD	-6652.01	-5587.28	-4320.5
34	34	218	LIVE	-11935.76	-5802.42	-3796.23
34	34	219	LIVE	-12026.55	-6105.04	5729.02
34	34	197	LIVE	-7373.4	-4709.09	5704.08
34	34	196	LIVE	-7282.61	-4406.48	-3821.18
34	34	218	SX	6825.51	483.12	5823.41
34	34	219	SX	7148.54	1729.08	4967.12
34	34	197	SX	2674.94	341.76	3091.7
34	34	196	SX	2563.81	1136.78	4010.44
34	34	218	SY	9757.84	674.03	4332.21
34	34	219	SY	9675.55	1840.01	5009.14
34	34	197	SY	6933.99	1262.53	3640.81
34	34	196	SY	7242.2	1196.94	3567.7
34	34	218	WB	-756.23	-145.	-17.58
34	34	219	WB	-758.82	-153.63	36.61
34	34	197	WB	-208.26	11.54	24.54
34	34	196	WB	-205.67	20.17	-29.66
35	35	219	DEAD	-8533.11	-6370.25	12611.79
35	35	166	DEAD	-12319.91	-18992.89	7116.77
35	35	198	DEAD	-4514.24	-16651.19	1176.54
35	35	197	DEAD	-727.45	-4028.55	6671.57
35	35	219	LIVE	-14472.22	-6838.74	11383.63
35	35	166	LIVE	-18072.78	-18840.59	6566.3
35	35	198	LIVE	-5691.94	-15126.34	1246.41
35	35	197	LIVE	-2091.39	-3124.49	6063.75

Table 32: Element Stresses - Area Shells, Part 1 of 3

Area	AreaElem	Joint	OutputCase	S11Top	S22Top	S12Top
				Kgf/m2	Kgf/m2	Kgf/m2
35	35	219	SX	13685.04	3803.2	5743.54
35	35	166	SX	12861.18	2288.76	5758.81
35	35	198	SX	4894.78	4338.82	2603.53
35	35	197	SX	4443.32	1401.87	2616.32
35	35	219	SY	12343.66	3317.61	6881.58
35	35	166	SY	11301.66	6336.95	6548.41
35	35	198	SY	4806.7	6735.36	5543.62
35	35	197	SY	5851.27	1645.96	5943.5
35	35	219	WB	-766.42	-155.91	83.83
35	35	166	WB	-810.31	-302.22	58.57
35	35	198	WB	-226.22	-126.99	20.93
35	35	197	WB	-182.32	19.32	46.19
36	36	166	DEAD	-12194.31	-18955.21	-5662.93
36	36	220	DEAD	-8228.89	-5737.15	-9548.86
36	36	199	DEAD	-1609.51	-3751.34	-2596.76
36	36	198	DEAD	-5574.93	-16969.4	1289.17
36	36	166	LIVE	-17388.01	-18635.16	-5246.7
36	36	220	LIVE	-13576.55	-5930.27	-8892.
36	36	199	LIVE	-3606.41	-2939.23	-2607.63
36	36	198	LIVE	-7417.88	-15644.12	1037.67
36	36	166	SX	3706.99	3748.02	6060.45
36	36	220	SX	3887.64	1738.15	6166.23
36	36	199	SX	3195.26	286.84	3247.65
36	36	198	SX	2648.96	3047.63	3116.82
36	36	166	SY	10365.12	5382.28	5993.73
36	36	220	SY	12009.19	2200.79	6653.49
36	36	199	SY	2883.61	1319.61	6475.55
36	36	198	SY	2157.45	7680.56	5520.16
36	36	166	WB	-750.85	-284.38	-58.12
36	36	220	WB	-701.53	-119.96	-96.01
36	36	199	WB	-256.39	13.58	-45.27
36	36	198	WB	-305.72	-150.84	-7.38
37	37	220	DEAD	-6918.82	-5344.13	-1229.72
37	37	221	DEAD	-5621.31	-1019.1	2479.
37	37	200	DEAD	-7654.53	-1629.06	686.49
37	37	199	DEAD	-8952.03	-5954.09	-3022.23
37	37	220	LIVE	-12478.05	-5600.73	-1162.4
37	37	221	LIVE	-11327.95	-1767.06	2038.8
37	37	200	LIVE	-8580.58	-942.85	-44.13
37	37	199	LIVE	-9730.68	-4776.51	-3245.32
37	37	220	SX	3788.31	259.47	5070.49
37	37	221	SX	4005.99	1284.27	4359.7
37	37	200	SX	1465.1	1406.82	2160.81
37	37	199	SX	1188.42	1166.01	2888.35
37	37	220	SY	7215.5	540.5	7757.87
37	37	221	SY	8212.81	3931.21	8018.57
37	37	200	SY	2972.67	2564.24	5263.16
37	37	199	SY	1955.41	1336.71	5181.44
37	37	220	WB	-697.3	-118.69	-12.45
37	37	221	WB	-690.99	-97.66	-5.63
37	37	200	WB	-253.28	33.65	-66.38
37	37	199	WB	-259.59	12.62	-73.2
38	38	221	DEAD	-6693.63	-1340.8	-857.34
38	38	222	DEAD	-7980.59	-5630.64	4650.16

Table 32: Element Stresses - Area Shells, Part 1 of 3

Area	AreaElem	Joint	OutputCase	S11Top	S22Top	S12Top
				Kgf/m2	Kgf/m2	Kgf/m2
38	38	201	DEAD	-8512.98	-5790.36	6705.5
38	38	200	DEAD	-7226.03	-1500.51	1198.
38	38	221	LIVE	-12133.71	-2008.79	-1312.2
38	38	222	LIVE	-13409.52	-6261.49	3810.25
38	38	201	LIVE	-9074.97	-4961.12	5828.52
38	38	200	LIVE	-7799.16	-708.42	706.07
38	38	221	SX	8087.2	1839.07	3732.26
38	38	222	SX	8228.75	2165.9	3454.05
38	38	201	SX	3418.44	1301.35	2641.41
38	38	200	SX	3662.42	2102.74	2828.57
38	38	221	SY	6641.83	2850.66	6152.07
38	38	222	SY	6424.5	1559.36	4849.11
38	38	201	SY	2783.71	1173.27	7038.33
38	38	200	SY	3289.81	2702.83	8156.92
38	38	221	WB	-684.82	-95.81	-66.86
38	38	222	WB	-708.95	-176.25	9.6
38	38	201	WB	-226.91	-31.63	42.33
38	38	200	WB	-202.77	48.81	-34.12
39	39	222	DEAD	-9991.48	-6233.91	14718.79
39	39	167	DEAD	-15820.05	-25662.48	7580.52
39	39	202	DEAD	-6870.66	-22977.66	-1067.19
39	39	201	DEAD	-1042.09	-3549.09	6071.09
39	39	222	LIVE	-14901.71	-6709.14	13391.33
39	39	167	LIVE	-20553.93	-25549.89	6787.01
39	39	202	LIVE	-7581.71	-21658.23	-1673.2
39	39	201	LIVE	-1929.48	-2817.48	4931.12
39	39	222	SX	12391.82	3412.9	4331.34
39	39	167	SX	11674.2	2614.73	3828.68
39	39	202	SX	5825.31	4728.02	1604.47
39	39	201	SX	5241.19	1852.26	1688.08
39	39	222	SY	8783.87	2218.86	7140.54
39	39	167	SY	7881.14	4280.52	8198.61
39	39	202	SY	3039.85	5589.4	5750.48
39	39	201	SY	2780.31	1134.59	4602.01
39	39	222	WB	-695.43	-172.19	156.86
39	39	167	WB	-794.78	-503.37	68.43
39	39	202	WB	-208.2	-327.4	-82.67
39	39	201	WB	-108.85	3.78	5.75
40	40	167	DEAD	-18848.34	-26570.96	-11031.73
40	40	223	DEAD	-13401.87	-8416.08	-16335.75
40	40	203	DEAD	1698.28	-3886.04	-8336.61
40	40	202	DEAD	-3748.19	-22040.92	-3032.59
40	40	167	LIVE	-21148.14	-25728.16	-11168.8
40	40	223	LIVE	-15853.05	-8077.84	-16634.61
40	40	203	LIVE	266.92	-3241.85	-9130.98
40	40	202	LIVE	-5028.18	-20892.17	-3665.16
40	40	167	SX	1942.96	3912.01	3100.38
40	40	223	SX	2006.1	4010.21	3277.31
40	40	203	SX	2028.7	3128.67	1037.76
40	40	202	SX	2077.5	3075.76	1504.19
40	40	167	SY	4868.94	5569.67	5340.56
40	40	223	SY	5717.04	5091.35	4870.25
40	40	203	SY	2496.7	3996.61	1913.4
40	40	202	SY	1448.19	5090.58	5215.24

Table 32: Element Stresses - Area Shells, Part 1 of 3

Area	AreaElem	Joint	OutputCase	S11Top	S22Top	S12Top
				Kgf/m2	Kgf/m2	Kgf/m2
40	40	167	WB	-593.05	-442.85	-231.94
40	40	223	WB	-499.86	-132.22	-349.48
40	40	203	WB	-123.48	-19.31	-246.05
40	40	202	WB	-216.67	-329.94	-128.51
41	41	223	DEAD	-9752.52	-7321.28	-6525.68
41	41	224	DEAD	-8221.79	-2218.83	175.91
41	41	204	DEAD	-4069.65	-973.19	-2204.58
41	41	203	DEAD	-5600.38	-6075.63	-8906.16
41	41	223	LIVE	-11799.92	-6861.9	-7302.61
41	41	224	LIVE	-10488.61	-2490.86	-972.69
41	41	204	LIVE	-4888.79	-810.91	-3554.17
41	41	203	LIVE	-6200.1	-5181.95	-9884.09
41	41	223	SX	965.31	3470.3	1299.33
41	41	224	SX	1271.74	1260.79	1510.78
41	41	204	SX	1520.18	1016.65	2484.3
41	41	203	SX	821.35	3245.94	1963.8
41	41	223	SY	3981.46	4555.45	2020.24
41	41	224	SY	3504.23	2100.71	933.41
41	41	204	SY	1217.73	1333.78	1690.21
41	41	203	SY	816.37	3705.3	2351.39
41	41	223	WB	-392.37	-99.98	-201.03
41	41	224	WB	-383.81	-71.46	-108.38
41	41	204	WB	-162.52	-5.07	-181.18
41	41	203	WB	-171.07	-33.59	-273.83
42	42	224	DEAD	-6179.5	-1606.15	-1638.44
42	42	225	DEAD	-6604.6	-3023.16	-2506.11
42	42	205	DEAD	-5757.97	-2769.17	-1636.17
42	42	204	DEAD	-5332.86	-1352.16	-768.5
42	42	224	LIVE	-7633.26	-1634.26	-2811.56
42	42	225	LIVE	-8075.93	-3109.8	-3635.31
42	42	205	LIVE	-6451.8	-2622.56	-3029.29
42	42	204	LIVE	-6009.13	-1147.02	-2205.54
42	42	224	SX	2047.13	1420.1	1949.96
42	42	225	SX	1993.57	1931.21	2272.9
42	42	205	SX	1314.69	1499.47	4201.89
42	42	204	SX	1493.51	906.23	3856.33
42	42	224	SY	4025.37	2372.52	1064.55
42	42	225	SY	4205.13	3262.49	1168.
42	42	205	SY	1505.81	1888.74	1966.05
42	42	204	SY	1764.91	937.73	1583.13
42	42	224	WB	-265.55	-35.98	-147.49
42	42	225	WB	-277.4	-75.47	-157.25
42	42	205	WB	-179.22	-46.02	-165.
42	42	204	WB	-167.38	-6.53	-155.24
43	43	225	DEAD	-6462.01	-2980.39	-125.96
43	43	226	DEAD	-6152.89	-1949.98	1637.21
43	43	206	DEAD	-4109.61	-1337.	-407.19
43	43	205	DEAD	-4418.73	-2367.4	-2170.36
43	43	225	LIVE	-7082.12	-2811.66	-1366.06
43	43	226	LIVE	-6898.27	-2198.84	320.55
43	43	206	LIVE	-4663.86	-1528.52	-1943.96
43	43	205	LIVE	-4847.71	-2141.34	-3630.58
43	43	225	SX	2183.75	2038.99	2650.01
43	43	226	SX	2472.1	1500.4	3906.41

Table 32: Element Stresses - Area Shells, Part 1 of 3

Area	AreaElem	Joint	OutputCase	S11Top	S22Top	S12Top
				Kgf/m2	Kgf/m2	Kgf/m2
43	43	206	SX	629.59	606.84	6351.21
43	43	205	SX	926.78	2019.79	5098.85
43	43	225	SY	4453.86	3340.97	1471.91
43	43	226	SY	4308.41	2436.52	2550.96
43	43	206	SY	1265.03	965.16	3513.17
43	43	205	SY	1109.74	2124.57	2463.55
43	43	225	WB	-192.59	-50.03	-117.6
43	43	226	WB	-197.2	-65.38	-90.06
43	43	206	WB	-135.32	-46.82	-151.99
43	43	205	WB	-130.72	-31.47	-179.53
44	44	226	DEAD	-7402.06	-2324.73	1583.5
44	44	227	DEAD	-8356.68	-5506.8	2397.52
44	44	207	DEAD	-1801.21	-3540.16	1697.3
44	44	206	DEAD	-846.59	-358.09	883.28
44	44	226	LIVE	-7210.15	-2292.4	404.05
44	44	227	LIVE	-8281.51	-5863.59	1216.7
44	44	207	LIVE	-2311.71	-4072.65	249.08
44	44	206	LIVE	-1240.35	-501.46	-563.58
44	44	226	SX	2166.39	1432.55	4717.44
44	44	227	SX	2731.98	4455.19	2261.11
44	44	207	SX	1566.5	3326.63	3518.04
44	44	206	SX	2651.23	784.51	5940.26
44	44	226	SY	4590.8	2520.59	3154.21
44	44	227	SY	4397.74	3333.99	1960.47
44	44	207	SY	1261.92	2651.38	2715.44
44	44	206	SY	1442.47	1010.26	3698.26
44	44	226	WB	-134.48	-46.57	-78.01
44	44	227	WB	-164.92	-148.01	-57.18
44	44	207	WB	-91.59	-126.01	-94.01
44	44	206	WB	-61.16	-24.57	-114.84
45	45	198	DEAD	-5717.62	-17445.04	1683.08
45	45	199	DEAD	-1869.86	-4619.16	5291.87
45	45	239	DEAD	1908.51	-3485.65	11342.29
45	45	178	DEAD	-1939.26	-16311.53	7733.5
45	45	198	LIVE	-7258.29	-15112.14	1361.62
45	45	199	LIVE	-4185.04	-4868.	3838.
45	45	239	LIVE	5460.18	-1974.43	8531.44
45	45	178	LIVE	2386.94	-12218.57	6055.06
45	45	198	SX	4344.5	3803.16	3515.25
45	45	199	SX	3647.95	1438.39	1988.7
45	45	239	SX	19203.66	5437.27	4768.79
45	45	178	SX	18667.89	4012.68	5325.08
45	45	198	SY	4304.15	5203.	9771.63
45	45	199	SY	3468.34	1687.84	3023.67
45	45	239	SY	7459.49	2593.41	4374.54
45	45	178	SY	7272.01	4657.25	4607.85
45	45	198	WB	-280.76	-67.66	-3.77
45	45	199	WB	-292.02	-105.2	-58.1
45	45	239	WB	355.91	89.18	-89.4
45	45	178	WB	367.17	126.72	-35.07
46	46	199	DEAD	-9212.38	-6821.92	4866.4
46	46	200	DEAD	-8249.15	-3611.16	1115.32
46	46	240	DEAD	5999.51	663.44	335.48
46	46	239	DEAD	5036.28	-2547.32	4086.55

Table 32: Element Stresses - Area Shells, Part 1 of 3

Area	AreaElem	Joint	OutputCase	S11Top	S22Top	S12Top
				Kgf/m2	Kgf/m2	Kgf/m2
46	46	199	LIVE	-10309.31	-6705.28	3200.32
46	46	200	LIVE	-9543.7	-4153.25	193.87
46	46	240	LIVE	8538.72	1271.48	-195.09
46	46	239	LIVE	7773.12	-1280.55	2811.36
46	46	199	SX	1203.31	532.99	2342.91
46	46	200	SX	845.4	1439.47	1979.68
46	46	240	SX	13469.86	2887.68	4190.72
46	46	239	SX	13794.76	3830.9	4186.65
46	46	199	SY	2738.87	1690.52	2250.61
46	46	200	SY	1803.47	2191.56	3620.1
46	46	240	SY	6372.37	2295.72	6889.17
46	46	239	SY	7036.14	2824.26	4452.42
46	46	199	WB	-295.23	-106.16	-86.03
46	46	200	WB	-299.66	-120.95	-71.14
46	46	240	WB	323.03	65.86	-46.72
46	46	239	WB	327.47	80.65	-61.61
47	47	200	DEAD	-7820.66	-3482.61	1626.83
47	47	201	DEAD	-9342.12	-8554.17	-3219.1
47	47	241	DEAD	5258.44	-4174.	-2693.57
47	47	240	DEAD	6779.9	897.56	2152.36
47	47	200	LIVE	-8762.28	-3918.82	944.07
47	47	201	LIVE	-10095.9	-8364.25	-3486.07
47	47	241	LIVE	7256.93	-3158.4	-3475.5
47	47	240	LIVE	8590.56	1287.03	954.64
47	47	200	SX	2860.45	845.65	2468.35
47	47	201	SX	3138.37	690.39	3661.83
47	47	241	SX	9169.97	2131.74	4334.2
47	47	240	SX	8946.86	1551.72	4069.18
47	47	200	SY	2004.11	2076.23	6730.76
47	47	201	SY	3171.15	2356.71	10607.24
47	47	241	SY	8417.18	3820.23	5764.07
47	47	240	SY	7332.19	1517.5	2259.69
47	47	200	WB	-249.15	-105.8	-38.88
47	47	201	WB	-261.88	-148.21	-97.5
47	47	241	WB	248.17	4.8	-139.35
47	47	240	WB	260.89	47.22	-80.73
48	48	201	DEAD	-1871.23	-6312.9	-3853.5
48	48	202	DEAD	-3841.27	-12879.68	1049.34
48	48	179	DEAD	1020.84	-11421.04	-5392.66
48	48	241	DEAD	2990.88	-4854.27	-10295.5
48	48	201	LIVE	-2950.42	-6220.6	-4383.47
48	48	202	LIVE	-4435.8	-11171.86	-295.53
48	48	179	LIVE	2879.1	-8977.39	-5779.53
48	48	241	LIVE	4364.48	-4026.13	-9867.47
48	48	201	SX	4923.67	907.14	3431.02
48	48	202	SX	5586.5	4698.09	2807.5
48	48	179	SX	5884.34	4958.1	4335.61
48	48	241	SX	5087.05	1246.09	5990.31
48	48	201	SY	3036.45	2155.81	8213.6
48	48	202	SY	4756.92	9699.72	1251.16
48	48	179	SY	12193.04	11719.8	7021.36
48	48	241	SY	10384.79	4527.53	15658.16
48	48	201	WB	-143.82	-112.8	-134.08
48	48	202	WB	-131.89	-73.01	-122.13

Table 32: Element Stresses - Area Shells, Part 1 of 3

Area	AreaElem	Joint	OutputCase	S11Top	S22Top	S12Top
				Kgf/m2	Kgf/m2	Kgf/m2
48	48	179	WB	147.05	10.67	-156.08
48	48	241	WB	135.12	-29.11	-168.03
49	49	202	DEAD	-718.14	-11942.91	-916.19
49	49	203	DEAD	1401.07	-4877.79	190.92
49	49	367	DEAD	-8877.15	-7960.66	5300.04
49	49	179	DEAD	-10996.76	-15026.35	4192.85
49	49	202	LIVE	-1881.7	-10405.78	-2287.6
49	49	203	LIVE	-195.43	-4783.81	-1341.63
49	49	367	LIVE	-6510.81	-6677.91	2865.9
49	49	179	LIVE	-8197.41	-12300.35	1919.85
49	49	202	SX	3218.55	4235.66	2512.95
49	49	203	SX	2291.31	1865.71	1909.3
49	49	367	SX	20304.81	8279.15	4517.39
49	49	179	SX	19841.68	7704.59	6350.65
49	49	202	SY	4081.54	9483.29	1540.63
49	49	203	SY	2396.32	2649.46	6412.04
49	49	367	SY	10286.	5130.49	6097.49
49	49	179	SY	10901.31	10554.33	3085.53
49	49	202	WB	-140.34	-75.55	-167.97
49	49	203	WB	-147.33	-98.8	-170.14
49	49	367	WB	70.19	-33.54	-160.99
49	49	179	WB	77.18	-10.29	-158.81
50	50	203	DEAD	-5898.37	-7067.85	-1538.51
50	50	204	DEAD	-5416.46	-5461.02	-4947.76
50	50	368	DEAD	-6540.98	-5798.56	-4764.18
50	50	242	DEAD	-7023.12	-7405.47	-1354.91
50	50	203	LIVE	-6667.01	-6737.04	-3050.91
50	50	204	LIVE	-6001.24	-4517.33	-6535.25
50	50	368	LIVE	-5303.49	-4308.18	-6085.77
50	50	242	LIVE	-5969.5	-6528.	-2601.42
50	50	203	SX	1185.79	1934.21	2209.56
50	50	204	SX	1430.31	9857.32	4381.25
50	50	368	SX	13912.83	13469.33	4166.13
50	50	242	SX	11722.53	5700.22	2846.67
50	50	203	SY	905.46	2358.77	6754.09
50	50	204	SY	2605.53	11352.2	2092.37
50	50	368	SY	8846.51	12925.73	2313.75
50	50	242	SY	6805.04	4216.85	7218.33
50	50	203	WB	-195.36	-114.5	-204.64
50	50	204	WB	-175.03	-46.7	-259.79
50	50	368	WB	-7.19	3.64	-233.89
50	50	242	WB	-27.53	-64.16	-178.75
51	51	204	DEAD	-6689.14	-5875.82	-3462.73
51	51	205	DEAD	-5817.42	-2968.49	-2410.45
51	51	369	DEAD	-5924.6	-3000.6	-3452.34
51	51	243	DEAD	-6796.66	-5907.94	-4504.75
51	51	204	LIVE	-7133.12	-4896.49	-5365.56
51	51	205	LIVE	-6568.15	-3011.26	-4303.77
51	51	369	LIVE	-4738.4	-2462.28	-5573.19
51	51	243	LIVE	-5303.71	-4347.5	-6635.08
51	51	204	SX	1228.49	9830.94	7031.26
51	51	205	SX	1005.34	3365.04	7835.62
51	51	369	SX	8861.07	5545.29	9445.5
51	51	243	SX	11056.93	12621.99	8648.52

Table 32: Element Stresses - Area Shells, Part 1 of 3

Area	AreaElem	Joint	OutputCase	S11Top	S22Top	S12Top
				Kgf/m2	Kgf/m2	Kgf/m2
51	51	204	SY	1654.24	11107.32	2617.81
51	51	205	SY	796.89	6181.82	3838.54
51	51	369	SY	4209.3	6792.32	3942.23
51	51	243	SY	5817.88	12054.84	3194.47
51	51	204	WB	-180.32	-49.76	-254.92
51	51	205	WB	-190.09	-82.23	-228.99
51	51	369	WB	8.2	-22.74	-276.45
51	51	243	WB	17.96	9.73	-302.38
52	52	205	DEAD	-4488.05	-2598.6	-2939.14
52	52	206	DEAD	-4773.88	-3551.25	-3485.24
52	52	370	DEAD	-7594.09	-4397.3	-3497.06
52	52	244	DEAD	-7308.13	-3444.6	-2950.9
52	52	205	LIVE	-4977.91	-2574.81	-4963.71
52	52	206	LIVE	-5532.6	-4423.97	-5374.59
52	52	370	LIVE	-6228.5	-4632.79	-5546.65
52	52	244	LIVE	-5673.71	-2783.58	-5135.7
52	52	205	SX	871.95	3695.73	9686.97
52	52	206	SX	701.	3286.86	7773.12
52	52	370	SX	5399.96	2047.62	8308.56
52	52	244	SX	6903.43	5028.02	10205.29
52	52	205	SY	862.83	6371.95	5051.52
52	52	206	SY	837.44	3481.22	3511.2
52	52	370	SY	2460.19	3272.69	3843.53
52	52	244	SY	3530.19	6749.81	5175.74
52	52	205	WB	-142.19	-69.64	-247.42
52	52	206	WB	-173.27	-173.28	-243.28
52	52	370	WB	6.51	-119.35	-262.56
52	52	244	WB	37.59	-15.71	-266.7
53	53	206	DEAD	-1520.53	-2604.06	-2574.96
53	53	207	DEAD	-1472.88	-2446.09	-3792.61
53	53	371	DEAD	-10228.35	-5073.03	-5769.57
53	53	245	DEAD	-10275.7	-5230.74	-4551.82
53	53	206	LIVE	-2123.65	-3445.46	-4430.06
53	53	207	LIVE	-2363.72	-4246.26	-5177.78
53	53	371	LIVE	-8618.2	-6122.87	-7245.83
53	53	245	LIVE	-8377.92	-5321.83	-6498.02
53	53	206	SX	1837.95	2780.61	8481.91
53	53	207	SX	1051.38	5545.94	8278.2
53	53	371	SX	1228.51	6004.7	8851.54
53	53	245	SX	1084.89	3228.57	9078.92
53	53	206	SY	829.53	3458.92	4220.46
53	53	207	SY	1497.73	4290.35	5221.35
53	53	371	SY	583.62	4064.72	5411.55
53	53	245	SY	1772.25	3799.12	4386.69
53	53	206	WB	-99.78	-153.29	-216.54
53	53	207	WB	-126.41	-242.05	-196.5
53	53	371	WB	0.33	-204.03	-247.26
53	53	245	WB	26.96	-115.27	-267.3
54	54	255	DEAD	1081.5	-812.38	519.21
54	54	261	DEAD	1374.76	165.98	1604.54
54	54	252	DEAD	-4404.76	-1567.88	2921.59
54	54	156	DEAD	-4698.06	-2546.25	1836.25
54	54	255	LIVE	1139.06	82.72	-85.32
54	54	261	LIVE	1233.17	397.31	1401.55

Table 32: Element Stresses - Area Shells, Part 1 of 3

Area	AreaElem	Joint	OutputCase	S11Top	S22Top	S12Top
				Kgf/m2	Kgf/m2	Kgf/m2
54	54	252	LIVE	-4053.26	-1188.62	2587.07
54	54	156	LIVE	-4147.43	-1503.22	1100.2
54	54	255	SX	4737.23	5603.57	2911.61
54	54	261	SX	3140.5	656.73	2094.37
54	54	252	SX	5937.74	3276.5	1200.54
54	54	156	SX	4393.26	3627.34	3929.
54	54	255	SY	3535.94	14603.26	11513.71
54	54	261	SY	1900.05	1085.85	4089.35
54	54	252	SY	5806.89	2263.05	3624.66
54	54	156	SY	3226.63	13601.23	10858.53
54	54	255	WB	6.45	52.47	-60.11
54	54	261	WB	-1.5	26.01	11.97
54	54	252	WB	-25.3	18.87	28.27
54	54	156	WB	-17.36	45.33	-43.81
55	55	256	DEAD	-3761.64	-571.36	-4593.19
55	55	258	DEAD	-3127.95	1542.72	-915.51
55	55	262	DEAD	-956.65	2194.1	1491.04
55	55	261	DEAD	-1590.49	79.99	-2186.65
55	55	256	LIVE	-3217.38	-14.52	-5380.69
55	55	258	LIVE	-2393.9	2732.56	-407.37
55	55	262	LIVE	-589.52	3273.87	2195.63
55	55	261	LIVE	-1413.19	526.74	-2777.7
55	55	256	SX	2474.55	2750.5	6286.07
55	55	258	SX	3899.46	7931.02	2263.63
55	55	262	SX	2459.98	6287.	5484.34
55	55	261	SX	3815.97	1339.65	3941.29
55	55	256	SY	9265.84	8686.15	20228.87
55	55	258	SY	11836.76	17914.42	1788.24
55	55	262	SY	1038.86	14629.4	7688.84
55	55	261	SY	2564.85	5323.53	14499.71
55	55	256	WB	35.52	64.44	-186.41
55	55	258	WB	72.48	187.73	39.96
55	55	262	WB	4.83	167.44	113.13
55	55	261	WB	-32.14	44.14	-113.24
56	56	262	DEAD	-2484.99	-434.64	-94.45
56	56	263	DEAD	-2766.81	-1373.17	857.78
56	56	254	DEAD	-1780.49	-1077.27	1290.88
56	56	253	DEAD	-1498.7	-138.76	338.66
56	56	262	LIVE	-2416.28	-463.89	70.63
56	56	263	LIVE	-2518.6	-804.05	1224.31
56	56	254	LIVE	-1621.22	-534.84	1204.29
56	56	253	LIVE	-1518.95	-194.69	50.61
56	56	262	SX	2134.05	290.01	1672.9
56	56	263	SX	2730.7	2207.96	1920.65
56	56	254	SX	1317.61	1377.71	1192.73
56	56	253	SX	1699.03	1075.81	2972.51
56	56	262	SY	2700.11	220.97	2317.15
56	56	263	SY	2186.31	3188.17	6401.87
56	56	254	SY	5440.54	2133.36	2778.27
56	56	253	SY	6286.3	1357.9	5647.02
56	56	262	WB	-57.89	-12.07	17.75
56	56	263	WB	-45.34	29.79	62.45
56	56	254	WB	5.92	45.17	24.31
56	56	253	WB	-6.63	3.31	-20.38

Table 32: Element Stresses - Area Shells, Part 1 of 3

Area	AreaElem	Joint	OutputCase	S11Top	S22Top	S12Top
				Kgf/m2	Kgf/m2	Kgf/m2
57	57	259	DEAD	-4600.92	-1689.77	1924.18
57	57	159	DEAD	-6245.99	-7172.21	2913.69
57	57	260	DEAD	-1158.3	-5645.9	3070.42
57	57	263	DEAD	486.73	-163.47	2080.94
57	57	259	LIVE	-3671.76	-1644.92	2525.22
57	57	159	LIVE	-4957.98	-5931.48	2822.71
57	57	260	LIVE	-948.55	-4728.65	2357.54
57	57	263	LIVE	337.65	-442.1	2060.07
57	57	259	SX	10382.75	2046.55	6868.02
57	57	159	SX	12159.96	8591.22	2482.61
57	57	260	SX	1225.26	5428.72	2826.36
57	57	263	SX	2121.54	1704.48	7102.25
57	57	259	SY	5998.23	974.81	9694.67
57	57	159	SY	5447.8	6278.39	4109.74
57	57	260	SY	2861.34	7259.06	3388.32
57	57	263	SY	1364.81	1264.04	4975.02
57	57	259	WB	45.31	-20.83	113.22
57	57	159	WB	41.65	-33.03	50.65
57	57	260	WB	-21.42	-51.95	-17.1
57	57	263	WB	-17.76	-39.75	45.47
58	58	157	DEAD	-6609.01	-4267.48	-2630.37
58	58	256	DEAD	-5671.78	-1144.4	-3491.15
58	58	261	DEAD	1640.11	1049.17	-2582.67
58	58	255	DEAD	702.91	-2073.91	-1721.91
58	58	157	LIVE	-6102.42	-3775.	-1765.28
58	58	256	LIVE	-5147.6	-593.58	-3576.95
58	58	261	LIVE	1538.04	1412.11	-3224.75
58	58	255	LIVE	583.28	-1769.29	-1413.1
58	58	157	SX	4685.96	2776.37	2897.21
58	58	256	SX	5780.41	3655.37	3697.63
58	58	261	SX	3131.44	1527.45	4243.26
58	58	255	SX	4227.08	4022.77	1941.55
58	58	157	SY	2495.16	12411.65	2774.02
58	58	256	SY	8411.38	8443.72	13680.74
58	58	261	SY	1303.08	5986.18	16445.89
58	58	255	SY	6202.39	14827.7	4519.83
58	58	157	WB	-25.98	-43.32	44.88
58	58	256	WB	3.48	54.83	-87.11
58	58	261	WB	7.53	56.04	-128.97
58	58	255	WB	-21.93	-42.1	3.02
59	59	261	DEAD	-1855.82	-803.2	2000.56
59	59	262	DEAD	-1671.78	-190.68	-59.
59	59	253	DEAD	-2454.4	-425.46	156.32
59	59	252	DEAD	-2638.36	-1037.96	2215.87
59	59	261	LIVE	-1718.05	-488.06	1848.6
59	59	262	LIVE	-1640.69	-231.21	-314.44
59	59	253	LIVE	-2394.33	-457.3	30.57
59	59	252	LIVE	-2471.61	-714.13	2193.61
59	59	261	SX	3861.55	429.74	2266.6
59	59	262	SX	4073.82	348.04	2392.49
59	59	253	SX	2891.15	1696.26	3175.26
59	59	252	SX	3078.85	2398.85	904.31
59	59	261	SY	3926.79	780.04	2677.34
59	59	262	SY	4085.46	426.18	6374.84

Table 32: Element Stresses - Area Shells, Part 1 of 3

Area	AreaElem	Joint	OutputCase	S11Top	S22Top	S12Top
				Kgf/m2	Kgf/m2	Kgf/m2
59	59	253	SY	5509.04	1238.65	4761.14
59	59	252	SY	5547.42	1913.	2001.82
59	59	261	WB	-41.16	14.11	27.7
59	59	262	WB	-48.13	-9.14	-28.09
59	59	253	WB	-18.76	-0.33	-12.16
59	59	252	WB	-11.79	22.92	43.64
60	60	263	DEAD	409.46	-420.28	1933.55
60	60	260	DEAD	-1324.89	-6202.62	-1611.58
60	60	158	DEAD	-3936.17	-6986.	-3885.26
60	60	254	DEAD	-2201.68	-1203.62	-340.1
60	60	263	LIVE	500.59	101.71	1867.95
60	60	260	LIVE	-1172.7	-5476.91	-1014.69
60	60	158	LIVE	-3532.63	-6184.89	-2804.6
60	60	254	LIVE	-1859.24	-606.23	78.06
60	60	263	SX	1475.69	1444.67	4110.91
60	60	260	SX	2315.43	4187.28	775.8
60	60	158	SX	3884.89	3281.65	5774.57
60	60	254	SX	4709.9	2364.08	2386.5
60	60	263	SY	949.1	3625.66	5490.58
60	60	260	SY	2917.	10613.95	4390.8
60	60	158	SY	3232.8	8938.16	7397.36
60	60	254	SY	5285.8	2339.36	7799.88
60	60	263	WB	7.89	45.76	38.55
60	60	260	WB	-31.64	-86.01	35.94
60	60	158	WB	-15.77	-81.25	38.13
60	60	254	WB	23.76	50.52	40.74
61	61	258	DEAD	-2418.76	1755.48	1151.09
61	61	259	DEAD	-3338.43	-1311.02	700.7
61	61	263	DEAD	-2689.55	-1116.35	1005.18
61	61	262	DEAD	-1769.86	1950.14	1455.59
61	61	258	LIVE	-994.99	3152.24	1696.59
61	61	259	LIVE	-2311.37	-1236.8	532.35
61	61	263	LIVE	-2681.55	-1347.85	1416.44
61	61	262	LIVE	-1365.12	3041.2	2580.7
61	61	258	SX	4186.94	6321.04	5698.49
61	61	259	SX	5234.7	514.18	5193.89
61	61	263	SX	2108.14	600.99	4622.61
61	61	262	SX	1251.26	6859.23	5772.22
61	61	258	SY	10391.73	17223.76	6161.74
61	61	259	SY	6467.34	1072.13	2258.96
61	61	263	SY	3146.76	1666.9	5717.16
61	61	262	SY	2440.3	15105.18	12789.32
61	61	258	WB	145.48	209.63	83.72
61	61	259	WB	79.42	-10.59	-5.89
61	61	263	WB	-70.99	-55.72	69.37
61	61	262	WB	-4.93	164.51	158.98
62	62	247	DEAD	4323.86	8190.86	2299.56
62	62	180	DEAD	-597.53	-8213.54	2444.51
62	62	159	DEAD	-6542.69	-9997.09	-4345.48
62	62	257	DEAD	-1621.29	6407.32	-4490.58
62	62	247	LIVE	7621.75	10927.59	5605.6
62	62	180	LIVE	2664.77	-5596.12	6260.16
62	62	159	LIVE	-4821.66	-7842.05	-2479.49
62	62	257	LIVE	135.37	8681.67	-3134.2

Table 32: Element Stresses - Area Shells, Part 1 of 3

Area	AreaElem	Joint	OutputCase	S11Top	S22Top	S12Top
				Kgf/m2	Kgf/m2	Kgf/m2
62	62	247	SX	3995.56	12812.13	1688.21
62	62	180	SX	2348.14	8278.95	2914.26
62	62	159	SX	10251.55	10616.14	10690.9
62	62	257	SX	4871.56	10793.54	11788.87
62	62	247	SY	6142.43	20562.27	7561.
62	62	180	SY	2246.65	13893.98	11411.16
62	62	159	SY	10361.11	16835.05	10890.78
62	62	257	SY	10420.84	21949.	13709.59
62	62	247	WB	460.78	475.33	401.42
62	62	180	WB	351.3	110.34	463.56
62	62	159	WB	86.3	30.84	102.51
62	62	257	WB	195.78	395.83	40.36
63	63	283	DEAD	-3231.01	-1080.71	915.44
63	63	282	DEAD	-3694.32	-1219.7	883.33
63	63	280	DEAD	-3679.21	-1212.25	546.25
63	63	281	DEAD	-3222.88	-1075.35	578.37
63	63	283	LIVE	-1708.21	-894.68	1438.94
63	63	282	LIVE	-1976.97	-975.31	1386.02
63	63	280	LIVE	-2074.16	-1304.49	1179.79
63	63	281	LIVE	-1809.67	-1225.14	1231.88
63	63	283	SX	7780.74	703.82	1730.73
63	63	282	SX	7852.85	2372.06	5123.2
63	63	280	SX	7861.99	2472.75	7447.07
63	63	281	SX	7748.56	661.49	3736.74
63	63	283	SY	15059.97	2223.15	5519.23
63	63	282	SY	10980.41	5671.88	5560.66
63	63	280	SY	10696.22	5245.61	7675.06
63	63	281	SY	15304.34	3022.12	7231.94
63	63	283	WB	72.73	-9.33	45.71
63	63	282	WB	75.8	-8.41	36.09
63	63	280	WB	66.11	-38.29	41.99
63	63	281	WB	63.17	-39.17	51.54
64	64	373	DEAD	-6983.4	-5235.16	-2773.74
64	64	244	DEAD	-6937.14	-5080.9	-3244.91
64	64	354	DEAD	-1012.9	-3303.52	-1139.38
64	64	353	DEAD	-1058.93	-3456.98	-667.93
64	64	373	LIVE	-5481.66	-3695.81	-5598.96
64	64	244	LIVE	-5871.81	-4996.3	-5510.25
64	64	354	LIVE	1638.58	-2742.87	-2772.42
64	64	353	LIVE	2029.05	-1441.34	-2860.78
64	64	373	SX	11289.	14270.61	12543.59
64	64	244	SX	7409.4	4706.75	5559.74
64	64	354	SX	19997.93	5161.84	2308.7
64	64	353	SX	23755.31	17322.3	5289.6
64	64	373	SY	7454.02	19150.1	4556.91
64	64	244	SY	4706.91	11193.28	5186.96
64	64	354	SY	9462.86	8369.76	4485.34
64	64	353	SY	9543.38	16722.38	2425.48
64	64	373	WB	13.06	11.74	-338.24
64	64	244	WB	-24.87	-114.71	-310.32
64	64	354	WB	230.69	-38.02	-220.22
64	64	353	WB	268.63	88.46	-248.12
65	65	374	DEAD	-8276.95	-5458.51	-2426.9
65	65	245	DEAD	-7801.46	-3874.54	-925.37

Table 32: Element Stresses - Area Shells, Part 1 of 3

Area	AreaElem	Joint	OutputCase	S11Top	S22Top	S12Top
				Kgf/m2	Kgf/m2	Kgf/m2
65	65	355	DEAD	-1717.42	-2049.14	-241.73
65	65	354	DEAD	-2192.35	-3632.6	-1742.79
65	65	374	LIVE	-6776.96	-5228.4	-4653.97
65	65	245	LIVE	-6599.37	-4637.67	-3295.88
65	65	355	LIVE	-113.93	-2692.06	-2170.07
65	65	354	LIVE	-290.94	-3282.05	-3527.7
65	65	374	SX	5194.89	4734.58	5094.52
65	65	245	SX	4571.33	4248.46	2476.32
65	65	355	SX	10826.13	3102.06	3223.83
65	65	354	SX	11386.32	4506.65	679.14
65	65	374	SY	3848.91	11039.37	4339.33
65	65	245	SY	2377.88	6275.	2749.
65	65	355	SY	4229.13	5372.44	4813.33
65	65	354	SY	4161.5	10077.64	1500.98
65	65	374	WB	5.14	-103.44	-286.62
65	65	245	WB	-13.97	-167.18	-273.16
65	65	355	WB	120.88	-126.74	-228.54
65	65	354	WB	140.	-62.98	-241.98
66	66	375	DEAD	-10632.66	-4719.47	-1679.79
66	66	246	DEAD	-10803.39	-5293.69	1652.26
66	66	356	DEAD	-1200.86	-2415.42	3177.5
66	66	355	DEAD	-1028.22	-1838.54	-152.81
66	66	375	LIVE	-8823.7	-5281.01	-3911.
66	66	246	LIVE	-9487.98	-7499.52	-975.23
66	66	356	LIVE	-731.12	-4874.63	952.78
66	66	355	LIVE	-64.89	-2652.91	-1981.47
66	66	375	SX	1491.32	5494.68	2662.65
66	66	246	SX	2730.15	10536.1	1172.5
66	66	356	SX	4066.26	8593.05	3936.42
66	66	355	SX	5877.49	4020.5	2434.02
66	66	375	SY	2620.25	6811.6	4070.72
66	66	246	SY	1069.92	7795.86	2721.75
66	66	356	SY	1686.06	7478.68	1744.65
66	66	355	SY	2534.81	6281.06	2353.5
66	66	375	WB	11.87	-157.14	-266.42
66	66	246	WB	-35.55	-315.19	-256.6
66	66	356	WB	26.96	-296.44	-209.73
66	66	355	WB	74.41	-138.32	-219.55
67	67	359	DEAD	442.24	253.26	2067.01
67	67	353	DEAD	-322.32	-2287.97	1135.07
67	67	284	DEAD	-3409.23	-3214.09	1696.29
67	67	358	DEAD	-2647.92	-673.99	2627.27
67	67	359	LIVE	4430.88	2882.31	-434.3
67	67	353	LIVE	3475.19	-276.37	949.03
67	67	284	LIVE	-1697.46	-1827.91	4422.82
67	67	358	LIVE	-737.33	1331.17	3038.35
67	67	359	SX	31641.03	19431.	8877.16
67	67	353	SX	28848.35	12637.37	5865.89
67	67	284	SX	11692.68	10770.52	23502.87
67	67	358	SX	8967.75	10583.28	12706.06
67	67	359	SY	12637.8	16970.96	19034.25
67	67	353	SY	11087.21	20064.43	2889.97
67	67	284	SY	18221.98	26644.54	23713.62
67	67	358	SY	17134.16	22730.78	7704.78

Table 32: Element Stresses - Area Shells, Part 1 of 3

Area	AreaElem	Joint	OutputCase	S11Top	S22Top	S12Top
				Kgf/m2	Kgf/m2	Kgf/m2
67	67	359	WB	375.25	225.79	-231.96
67	67	353	WB	341.9	116.53	-29.28
67	67	284	WB	93.84	42.14	237.98
67	67	358	WB	127.86	151.53	35.27
68	68	353	DEAD	-745.65	-2415.13	1104.13
68	68	354	DEAD	-764.24	-2473.84	866.59
68	68	282	DEAD	-4277.9	-3527.81	1400.52
68	68	284	DEAD	-4259.81	-3469.11	1637.9
68	68	353	LIVE	2270.08	-638.02	1215.83
68	68	354	LIVE	1973.4	-1629.69	110.55
68	68	282	LIVE	-2488.81	-2968.45	898.91
68	68	284	LIVE	-2194.59	-1977.32	2003.75
68	68	353	SX	20896.58	11132.13	12836.21
68	68	354	SX	21235.89	9242.2	10585.78
68	68	282	SX	11312.53	7217.08	10747.12
68	68	284	SX	12083.5	11074.79	12237.34
68	68	353	SY	7821.76	20635.92	5379.19
68	68	354	SY	9286.47	10949.95	7713.15
68	68	282	SY	15498.04	16935.02	12252.42
68	68	284	SY	18376.72	26767.34	6453.22
68	68	353	WB	270.6	95.14	-12.96
68	68	354	WB	246.37	13.93	-95.98
68	68	282	WB	75.13	-37.46	-52.84
68	68	284	WB	99.16	43.7	30.15
69	69	354	DEAD	-1951.95	-2830.1	192.71
69	69	355	DEAD	-1986.24	-2948.25	-827.92
69	69	280	DEAD	-4422.91	-3679.25	-97.63
69	69	282	DEAD	-4390.96	-3561.8	922.97
69	69	354	LIVE	31.11	-2212.38	-731.79
69	69	355	LIVE	-391.26	-3620.15	-1581.51
69	69	280	LIVE	-2998.12	-4402.21	-40.1
69	69	282	LIVE	-2577.7	-2995.03	809.23
69	69	354	SX	12665.12	7680.73	9835.13
69	69	355	SX	11033.47	1317.37	7055.82
69	69	280	SX	9592.6	6839.28	8762.54
69	69	282	SX	8776.18	7083.82	11112.04
69	69	354	SY	4531.6	12601.26	9779.8
69	69	355	SY	5069.26	2583.05	4021.8
69	69	280	SY	10623.13	5569.83	4300.14
69	69	282	SY	14167.04	16597.8	5970.02
69	69	354	WB	154.97	-13.49	-123.93
69	69	355	WB	119.94	-129.98	-137.05
69	69	280	WB	31.43	-156.53	-44.77
69	69	282	WB	66.43	-40.06	-31.68
70	70	355	DEAD	-1300.31	-2742.37	-402.34
70	70	356	DEAD	-1447.	-3225.64	-1513.58
70	70	278	DEAD	-5090.07	-4318.88	-1888.45
70	70	280	DEAD	-4945.9	-3836.26	-777.22
70	70	355	LIVE	-351.89	-3608.27	-1115.71
70	70	356	LIVE	-772.87	-5008.34	-2277.18
70	70	278	LIVE	-3997.38	-5975.79	-2164.03
70	70	280	LIVE	-3579.08	-4576.55	-1002.83
70	70	355	SX	6014.37	2409.93	7150.66
70	70	356	SX	5260.73	4644.24	7562.88

Table 32: Element Stresses - Area Shells, Part 1 of 3

Area	AreaElem	Joint	OutputCase	S11Top	S22Top	S12Top
				Kgf/m2	Kgf/m2	Kgf/m2
70	70	278	SX	8039.4	8530.84	6883.38
70	70	280	SX	7356.44	6174.36	6433.83
70	70	355	SY	2265.13	2898.77	2497.35
70	70	356	SY	2054.8	5998.29	2784.97
70	70	278	SY	6378.65	6381.44	2742.59
70	70	280	SY	7137.86	4754.79	2629.01
70	70	355	WB	72.7	-144.15	-131.14
70	70	356	WB	43.98	-240.04	-146.97
70	70	278	WB	-17.62	-258.5	-101.23
70	70	280	WB	11.07	-162.64	-85.42
71	71	281	DEAD	-2849.49	-963.4	373.54
71	71	280	DEAD	-4203.42	-1369.58	-132.52
71	71	278	DEAD	-4225.33	-1394.5	-560.63
71	71	279	DEAD	-2880.27	-990.99	-54.63
71	71	281	LIVE	-948.37	-966.74	957.4
71	71	280	LIVE	-2657.66	-1479.53	217.14
71	71	278	LIVE	-2976.46	-2513.29	-552.63
71	71	279	LIVE	-1283.12	-2005.28	185.02
71	71	281	SX	6750.86	519.34	5730.79
71	71	280	SX	5596.55	2138.76	5261.91
71	71	278	SX	6858.51	4390.05	3155.57
71	71	279	SX	8233.31	4593.78	3947.93
71	71	281	SY	9655.45	1287.28	8938.31
71	71	280	SY	7189.2	4225.71	6178.46
71	71	278	SY	6156.53	2852.1	5769.06
71	71	279	SY	10913.29	5828.98	8578.85
71	71	281	WB	101.35	-27.71	38.13
71	71	280	WB	45.59	-44.44	1.29
71	71	278	WB	15.79	-144.3	-46.23
71	71	279	WB	70.56	-127.87	-9.64
72	72	279	DEAD	-2549.93	-889.12	-863.83
72	72	278	DEAD	-5075.35	-1646.56	-861.35
72	72	170	DEAD	-5810.62	-4099.9	-1113.42
72	72	171	DEAD	-3290.36	-3344.18	-1115.79
72	72	279	LIVE	-932.85	-1893.97	-1112.98
72	72	278	LIVE	-3377.2	-2627.28	-990.69
72	72	170	LIVE	-4284.13	-5657.55	-1980.32
72	72	171	LIVE	-1860.99	-4933.03	-2104.2
72	72	279	SX	6823.22	4433.07	4086.21
72	72	278	SX	7075.39	4408.49	4938.08
72	72	170	SX	6393.78	3162.38	8833.27
72	72	171	SX	6015.23	3064.64	5657.94
72	72	279	SY	5188.82	4313.26	7949.72
72	72	278	SY	4074.41	2570.63	7917.83
72	72	170	SY	3525.06	5195.89	10122.93
72	72	171	SY	5301.83	6592.24	9465.16
72	72	279	WB	60.75	-130.37	-79.34
72	72	278	WB	50.79	-133.43	-64.27
72	72	170	WB	9.46	-271.55	-146.82
72	72	171	WB	17.6	-269.31	-162.23
73	73	359	DEAD	195.73	-642.74	-1028.77
73	73	360	DEAD	-4443.52	-2003.61	510.27
73	73	243	DEAD	-5279.04	-4733.45	995.87
73	73	353	DEAD	-626.58	-3348.54	-555.59

Table 32: Element Stresses - Area Shells, Part 1 of 3

Area	AreaElem	Joint	OutputCase	S11Top	S22Top	S12Top
				Kgf/m2	Kgf/m2	Kgf/m2
73	73	359	LIVE	4245.61	2183.97	-2136.8
73	73	360	LIVE	-3103.11	-4.07	-2086.58
73	73	243	LIVE	-4093.78	-3295.63	-3030.91
73	73	353	LIVE	3243.06	-1110.41	-3099.16
73	73	359	SX	31754.51	18408.84	1350.59
73	73	360	SX	8624.51	11770.17	9042.75
73	73	243	SX	8909.91	13563.65	20485.16
73	73	353	SX	31746.53	19481.51	12546.41
73	73	359	SY	14308.76	8015.81	3623.58
73	73	360	SY	3460.6	8859.03	6286.89
73	73	243	SY	4864.31	18438.72	7819.28
73	73	353	SY	12797.85	16403.54	6352.09
73	73	359	WB	382.37	248.24	-151.02
73	73	360	WB	59.46	150.69	-247.87
73	73	243	WB	18.92	12.45	-364.17
73	73	353	WB	339.89	108.17	-268.1
75	75	182	DEAD	-2185.76	-293.9	3920.14
75	75	265	DEAD	-2849.69	-2507.	3207.31
75	75	334	DEAD	-1375.33	-2064.7	2453.58
75	75	183	DEAD	-711.4	148.41	3166.41
75	75	182	LIVE	262.12	-334.54	5470.76
75	75	265	LIVE	-376.42	-2463.02	4319.8
75	75	334	LIVE	-987.1	-2646.22	3141.8
75	75	183	LIVE	-348.56	-517.74	4292.76
75	75	182	SX	5673.37	175.22	5425.04
75	75	265	SX	6099.17	1704.12	4543.28
75	75	334	SX	2890.62	788.9	5349.35
75	75	183	SX	3111.6	2021.9	6143.57
75	75	182	SY	5812.85	587.91	8824.48
75	75	265	SY	5687.86	1169.13	7354.57
75	75	334	SY	5349.63	2683.02	3593.95
75	75	183	SY	5146.35	1614.4	5014.99
75	75	182	WB	198.73	-10.07	241.51
75	75	265	WB	188.72	-43.43	182.
75	75	334	WB	-29.79	-108.99	126.3
75	75	183	WB	-19.78	-75.62	185.82
76	76	265	DEAD	-2453.72	-2388.21	868.93
76	76	266	DEAD	-1879.69	-474.78	-285.6
76	76	335	DEAD	649.3	283.91	276.77
76	76	334	DEAD	75.27	-1629.52	1431.29
76	76	265	LIVE	-387.48	-2466.33	1338.
76	76	266	LIVE	383.16	102.45	297.05
76	76	335	LIVE	1930.27	566.58	928.29
76	76	334	LIVE	1159.63	-2002.2	1969.23
76	76	265	SX	2792.53	642.9	4431.96
76	76	266	SX	2945.4	1081.11	5602.36
76	76	335	SX	7710.04	2145.77	7413.33
76	76	334	SX	7670.91	2030.83	6321.08
76	76	265	SY	5527.37	969.16	2906.01
76	76	266	SY	6242.82	2214.08	2574.78
76	76	335	SY	9692.4	3323.04	5841.8
76	76	334	SY	9600.38	3704.75	7284.02
76	76	265	WB	150.84	-54.8	69.97
76	76	266	WB	181.48	47.33	55.01

Table 32: Element Stresses - Area Shells, Part 1 of 3

Area	AreaElem	Joint	OutputCase	S11Top	S22Top	S12Top
				Kgf/m2	Kgf/m2	Kgf/m2
76	76	335	WB	106.39	24.81	74.41
76	76	334	WB	75.75	-77.33	89.37
77	77	266	DEAD	-1953.51	-496.93	484.33
77	77	267	DEAD	-1850.33	-153.01	516.81
77	77	347	DEAD	864.68	661.5	-73.58
77	77	335	DEAD	761.51	317.58	-106.06
77	77	266	LIVE	268.22	67.97	1335.35
77	77	267	LIVE	248.62	2.65	1361.74
77	77	347	LIVE	2530.23	687.13	673.68
77	77	335	LIVE	2549.83	752.45	647.29
77	77	266	SX	2637.47	1398.71	6091.82
77	77	267	SX	2600.05	1982.78	8052.96
77	77	347	SX	15214.18	3576.41	8588.79
77	77	335	SX	15465.95	4283.	8455.46
77	77	266	SY	5399.37	2095.64	9821.14
77	77	267	SY	4865.23	4235.18	20377.99
77	77	347	SY	14836.81	7824.55	7206.21
77	77	335	SY	14110.3	4600.55	6633.59
77	77	266	WB	172.04	44.5	94.78
77	77	267	WB	162.73	13.5	95.83
77	77	347	WB	153.73	10.8	74.97
77	77	335	WB	163.03	41.8	73.92
78	78	267	DEAD	-1349.45	-2.74	59.35
78	78	268	DEAD	-1724.02	-1251.3	852.32
78	78	349	DEAD	937.02	-452.98	997.56
78	78	347	DEAD	1311.59	795.57	204.6
78	78	267	LIVE	337.05	29.18	843.74
78	78	268	LIVE	-107.05	-1451.13	1618.13
78	78	349	LIVE	3486.49	-373.07	1738.48
78	78	347	LIVE	3930.58	1107.24	964.09
78	78	267	SX	3250.18	2422.3	7167.74
78	78	268	SX	3654.87	5299.39	10337.35
78	78	349	SX	13942.41	7212.2	10616.92
78	78	347	SX	13140.93	3299.64	9326.24
78	78	267	SY	4565.65	3317.95	12841.54
78	78	268	SY	4463.84	20119.28	14465.22
78	78	349	SY	22969.12	25723.6	6195.27
78	78	347	SY	18456.4	8947.95	22893.16
78	78	267	WB	127.7	2.99	83.12
78	78	268	WB	115.17	-38.79	92.05
78	78	349	WB	255.36	3.27	91.39
78	78	347	WB	267.89	45.04	82.46
79	79	268	DEAD	-1464.53	-1173.45	1904.34
79	79	269	DEAD	-1544.61	-1440.38	843.6
79	79	336	DEAD	2022.94	-370.12	-514.09
79	79	349	DEAD	2103.01	-103.19	546.65
79	79	268	LIVE	108.62	-1386.43	2651.31
79	79	269	LIVE	-103.4	-2093.14	1225.42
79	79	336	LIVE	5647.83	-367.77	-254.14
79	79	349	LIVE	5859.84	338.94	1171.75
79	79	268	SX	2004.82	4866.21	11654.05
79	79	269	SX	1408.6	1757.52	8172.38
79	79	336	SX	18432.46	4192.25	9779.83
79	79	349	SX	19814.53	9433.5	12140.59

Table 32: Element Stresses - Area Shells, Part 1 of 3

Area	AreaElem	Joint	OutputCase	S11Top	S22Top	S12Top
				Kgf/m2	Kgf/m2	Kgf/m2
79	79	268	SY	4019.85	19194.54	25801.1
79	79	269	SY	6965.74	2028.38	11534.23
79	79	336	SY	19297.41	8890.97	7250.13
79	79	349	SY	24292.15	26333.37	9778.29
79	79	268	WB	102.56	-42.57	104.34
79	79	269	WB	86.41	-96.41	56.93
79	79	336	WB	417.01	2.77	28.44
79	79	349	WB	433.16	56.61	75.85
80	80	269	DEAD	-948.4	-1261.52	-1033.91
80	80	270	DEAD	-727.02	-523.58	-1302.05
80	80	337	DEAD	1868.42	255.06	-668.61
80	80	336	DEAD	1647.04	-482.89	-400.47
80	80	269	LIVE	479.6	-1918.24	-1207.82
80	80	270	LIVE	833.	-740.22	-1742.78
80	80	337	LIVE	5676.62	712.86	-1001.64
80	80	336	LIVE	5323.22	-465.15	-466.68
80	80	269	SX	6412.43	666.64	7855.11
80	80	270	SX	7002.12	3464.02	8559.69
80	80	337	SX	11453.57	5873.91	11051.97
80	80	336	SX	10381.83	2730.65	12006.82
80	80	269	SY	9636.38	1592.04	7278.63
80	80	270	SY	8913.47	5590.85	16883.05
80	80	337	SY	22336.94	13949.24	5932.6
80	80	336	SY	20786.22	9250.77	7149.15
80	80	269	WB	87.39	-96.11	-25.2
80	80	270	WB	102.27	-46.52	-59.8
80	80	337	WB	439.06	54.51	-39.26
80	80	336	WB	424.18	4.93	-4.65
81	81	270	DEAD	-384.22	-420.74	-740.6
81	81	271	DEAD	-423.12	-550.39	-461.42
81	81	341	DEAD	1344.63	-20.07	-1198.91
81	81	337	DEAD	1383.53	109.59	-1478.08
81	81	270	LIVE	1609.63	-507.23	-1176.7
81	81	271	LIVE	1558.96	-676.13	-909.79
81	81	341	LIVE	4811.27	299.56	-1758.45
81	81	337	LIVE	4861.94	468.46	-2025.36
81	81	270	SX	11491.07	4590.36	7555.09
81	81	271	SX	10858.47	3951.31	10351.61
81	81	341	SX	13038.24	6853.63	11220.15
81	81	337	SX	13116.08	6350.46	10699.86
81	81	270	SY	9390.49	5664.16	10080.59
81	81	271	SY	7855.77	10994.68	11784.1
81	81	341	SY	27967.07	20777.7	4791.83
81	81	337	SY	26394.11	15196.59	22595.64
81	81	270	WB	146.22	-33.34	-56.4
81	81	271	WB	148.74	-24.93	-54.96
81	81	341	WB	384.75	45.87	-75.25
81	81	337	WB	382.22	37.46	-76.68
82	82	271	DEAD	-54.45	-439.8	-528.14
82	82	272	DEAD	20.68	-189.34	-474.19
82	82	339	DEAD	2012.97	408.35	-448.52
82	82	341	DEAD	1937.83	157.89	-502.47
82	82	271	LIVE	1923.92	-566.64	-983.04
82	82	272	LIVE	2051.55	-141.19	-960.97

Table 32: Element Stresses - Area Shells, Part 1 of 3

Area	AreaElem	Joint	OutputCase	S11Top	S22Top	S12Top
				Kgf/m2	Kgf/m2	Kgf/m2
82	82	339	LIVE	5469.77	884.27	-998.83
82	82	341	LIVE	5342.13	458.82	-1020.89
82	82	271	SX	8561.71	4143.01	11473.41
82	82	272	SX	7574.62	2700.92	7680.45
82	82	339	SX	34164.03	5923.36	8996.37
82	82	341	SX	35465.19	10937.38	12421.96
82	82	271	SY	5412.72	12398.89	15100.76
82	82	272	SY	8353.29	6860.6	7041.47
82	82	339	SY	25291.62	2930.89	4072.41
82	82	341	SY	30607.05	21280.51	10524.94
82	82	271	WB	167.24	-19.38	-57.33
82	82	272	WB	173.12	0.24	-62.76
82	82	339	WB	330.58	47.47	-65.77
82	82	341	WB	324.69	27.85	-60.33
83	83	272	DEAD	294.73	-107.13	-271.46
83	83	273	DEAD	372.2	151.11	-176.32
83	83	343	DEAD	1602.81	520.29	-516.61
83	83	339	DEAD	1525.34	262.06	-611.75
83	83	272	LIVE	2544.81	6.78	-881.68
83	83	273	LIVE	2622.82	266.83	-710.52
83	83	343	LIVE	4590.73	857.21	-915.24
83	83	339	LIVE	4512.71	597.15	-1086.4
83	83	272	SX	12856.82	1603.06	8564.22
83	83	273	SX	12945.15	269.19	9247.79
83	83	343	SX	23730.71	3261.8	10220.43
83	83	339	SX	23556.11	2675.72	9454.43
83	83	272	SY	5192.87	5088.87	5279.81
83	83	273	SY	5144.18	825.47	7563.33
83	83	343	SY	19822.13	4680.25	11069.53
83	83	339	SY	18649.21	1221.8	8621.26
83	83	272	WB	199.41	8.12	-67.72
83	83	273	WB	202.	16.75	-56.59
83	83	343	WB	275.42	38.78	-52.34
83	83	339	WB	272.83	30.15	-63.47
84	84	273	DEAD	158.19	86.91	-570.52
84	84	274	DEAD	258.29	420.57	-682.33
84	84	345	DEAD	1447.06	777.2	105.25
84	84	343	DEAD	1346.96	443.54	217.05
84	84	273	LIVE	2669.52	280.84	-929.9
84	84	274	LIVE	2698.54	377.56	-1279.51
84	84	345	LIVE	3930.76	747.23	-567.08
84	84	343	LIVE	3901.75	650.51	-217.46
84	84	273	SX	17173.52	1240.33	9001.18
84	84	274	SX	17145.6	1353.46	9765.48
84	84	345	SX	13405.44	2126.74	11600.03
84	84	343	SX	13325.24	1062.04	10813.04
84	84	273	SY	6273.51	595.25	11581.6
84	84	274	SY	6544.92	2345.9	10295.17
84	84	345	SY	12894.93	5052.32	7942.62
84	84	343	SY	12167.49	2371.62	9120.91
84	84	273	WB	221.71	22.67	-49.68
84	84	274	WB	215.74	2.77	-75.77
84	84	345	WB	220.18	4.1	-65.24
84	84	343	WB	226.15	24.	-39.16

Table 32: Element Stresses - Area Shells, Part 1 of 3

Area	AreaElem	Joint	OutputCase	S11Top	S22Top	S12Top
				Kgf/m2	Kgf/m2	Kgf/m2
85	85	250	DEAD	-2178.04	-3441.33	2818.73
85	85	251	DEAD	-1192.37	-155.74	435.18
85	85	270	DEAD	-559.73	34.05	-1835.23
85	85	269	DEAD	-1545.4	-3251.54	548.31
85	85	250	LIVE	-1742.63	-4960.69	3631.75
85	85	251	LIVE	-494.89	-801.58	1649.94
85	85	270	LIVE	944.1	-369.88	-1836.13
85	85	269	LIVE	-303.63	-4528.99	145.68
85	85	250	SX	3912.55	9583.9	3864.21
85	85	251	SX	2632.87	4563.97	3603.03
85	85	270	SX	7120.37	4751.81	3519.34
85	85	269	SX	7256.22	9336.92	5429.81
85	85	250	SY	10534.28	34453.04	12634.88
85	85	251	SY	4114.3	11098.68	15602.29
85	85	270	SY	8275.76	8356.65	6969.94
85	85	269	SY	3577.68	31367.71	11722.03
85	85	250	WB	1.29	-204.87	111.
85	85	251	WB	41.17	-71.96	108.35
85	85	270	WB	99.93	-54.33	-37.01
85	85	269	WB	60.05	-187.25	-34.36
86	86	248	DEAD	-1431.73	-5266.87	4679.02
86	86	249	DEAD	141.34	-23.3	4316.65
86	86	266	DEAD	-1930.73	-644.92	143.5
86	86	265	DEAD	-3503.8	-5888.49	505.86
86	86	248	LIVE	-757.15	-6195.49	6367.8
86	86	249	LIVE	1113.51	40.06	5764.54
86	86	266	LIVE	290.36	-206.89	965.17
86	86	265	LIVE	-1580.31	-6442.44	1568.42
86	86	248	SX	2676.82	1782.07	5806.19
86	86	249	SX	2678.57	3536.14	6772.34
86	86	266	SX	3624.22	3964.11	4048.9
86	86	265	SX	3049.16	1599.17	4115.82
86	86	248	SY	1640.22	3470.17	11295.25
86	86	249	SY	2402.68	9851.82	14829.16
86	86	266	SY	5851.82	9851.74	9112.5
86	86	265	SY	5222.67	2855.82	5657.77
86	86	248	WB	41.4	-204.74	258.8
86	86	249	WB	103.99	3.91	227.59
86	86	266	WB	174.83	25.16	84.26
86	86	265	WB	112.24	-183.49	115.48
87	87	181	DEAD	62.76	130.55	5951.83
87	87	380	DEAD	-1052.09	-3590.59	1767.55
87	87	265	DEAD	-3384.1	-4287.96	66.31
87	87	182	DEAD	-2268.47	-567.62	4250.52
87	87	181	LIVE	-460.55	-428.13	6865.76
87	87	380	LIVE	-1704.1	-4578.68	2364.72
87	87	265	LIVE	-941.92	-4347.87	1012.83
87	87	182	LIVE	302.55	-197.86	5514.08
87	87	181	SX	2737.82	2456.4	4957.42
87	87	380	SX	2373.48	1051.09	1347.94
87	87	265	SX	6431.38	2719.3	3459.62
87	87	182	SX	5581.94	513.16	4240.61
87	87	181	SY	6121.16	2728.33	9062.89
87	87	380	SY	4904.91	3067.81	1685.98

Table 32: Element Stresses - Area Shells, Part 1 of 3

Area	AreaElem	Joint	OutputCase	S11Top	S22Top	S12Top
				Kgf/m2	Kgf/m2	Kgf/m2
87	87	265	SY	5655.91	3512.73	1749.06
87	87	182	SY	6212.06	1894.67	9435.42
87	87	181	WB	-39.8	-52.04	209.15
87	87	380	WB	-76.16	-173.39	99.52
87	87	265	WB	172.09	-98.88	101.72
87	87	182	WB	208.48	22.48	211.38
88	88	381	DEAD	1553.04	181.76	622.
88	88	346	DEAD	1757.9	864.39	1478.36
88	88	267	DEAD	-1871.79	-224.83	1001.19
88	88	266	DEAD	-2076.3	-907.11	145.11
88	88	381	LIVE	2765.71	179.49	270.62
88	88	346	LIVE	2999.63	956.99	2755.08
88	88	267	LIVE	291.16	144.42	1726.87
88	88	266	LIVE	58.16	-632.26	-757.37
88	88	381	SX	2573.44	2127.7	2191.95
88	88	346	SX	2277.62	996.96	4265.8
88	88	267	SX	2634.17	1699.38	4110.98
88	88	266	SX	2968.92	2620.4	3142.04
88	88	381	SY	7059.01	4736.51	5028.34
88	88	346	SY	7680.01	1653.92	7468.37
88	88	267	SY	5140.05	3695.52	10074.03
88	88	266	SY	5467.92	6783.66	9601.55
88	88	381	WB	148.08	-0.45	-19.34
88	88	346	WB	156.77	28.32	154.79
88	88	267	WB	168.21	31.77	91.36
88	88	266	WB	159.58	3.05	-82.77
89	89	346	DEAD	-840.91	84.81	511.65
89	89	348	DEAD	-796.66	232.27	698.81
89	89	268	DEAD	-1326.65	73.28	731.
89	89	267	DEAD	-1370.89	-74.19	543.84
89	89	346	LIVE	-302.18	-33.15	623.95
89	89	348	LIVE	-262.04	100.65	830.66
89	89	268	LIVE	419.86	305.22	1415.66
89	89	267	LIVE	379.72	171.42	1208.94
89	89	346	SX	3873.12	1096.45	1063.92
89	89	348	SX	4055.22	1101.88	1762.58
89	89	268	SX	2804.49	716.53	1790.58
89	89	267	SX	2670.87	1101.61	2838.2
89	89	346	SY	13958.81	969.62	1488.88
89	89	348	SY	14423.8	2558.83	970.18
89	89	268	SY	5053.6	1031.39	2516.37
89	89	267	SY	4898.92	2667.35	3403.44
89	89	346	WB	34.46	-8.34	20.76
89	89	348	WB	35.3	-5.52	25.07
89	89	268	WB	134.03	24.1	82.96
89	89	267	WB	133.19	21.28	78.65
90	90	348	DEAD	-2187.99	-185.41	2469.14
90	90	382	DEAD	-3049.37	-3060.22	-425.55
90	90	269	DEAD	-1929.66	-2723.88	-1111.92
90	90	268	DEAD	-1067.4	150.98	1782.94
90	90	348	LIVE	-2971.49	-712.56	3824.56
90	90	382	LIVE	-4145.68	-4630.62	454.1
90	90	269	LIVE	-539.84	-3548.2	-922.04
90	90	268	LIVE	635.32	369.72	2448.72

Table 32: Element Stresses - Area Shells, Part 1 of 3

Area	AreaElem	Joint	OutputCase	S11Top	S22Top	S12Top
				Kgf/m2	Kgf/m2	Kgf/m2
90	90	348	SX	5504.4	1705.6	2985.63
90	90	382	SX	3569.99	6364.32	1171.92
90	90	269	SX	2769.65	7772.16	4179.79
90	90	268	SX	1567.52	200.6	2809.12
90	90	348	SY	10597.78	2659.9	8373.92
90	90	382	SY	5298.13	25065.3	5614.5
90	90	269	SY	4655.43	25885.79	9688.78
90	90	268	SY	7559.8	345.02	12007.64
90	90	348	WB	-109.96	-49.12	176.7
90	90	382	WB	-155.71	-201.75	72.52
90	90	269	WB	75.65	-132.31	-8.95
90	90	268	WB	121.42	20.31	95.25
91	91	383	DEAD	204.81	223.28	107.63
91	91	352	DEAD	157.21	63.69	313.92
91	91	271	DEAD	-277.98	-66.35	-65.25
91	91	270	DEAD	-230.24	93.54	-271.5
91	91	383	LIVE	502.89	-399.87	-543.91
91	91	352	LIVE	593.06	-100.98	341.58
91	91	271	LIVE	1844.07	274.9	-300.99
91	91	270	LIVE	1754.32	-23.42	-1186.59
91	91	383	SX	4045.3	2065.84	3203.6
91	91	352	SX	4369.59	769.37	5069.35
91	91	271	SX	11154.53	2834.49	2055.89
91	91	270	SX	11497.6	4711.29	6690.23
91	91	383	SY	17670.97	3583.49	10205.87
91	91	352	SY	18693.29	1512.23	5426.41
91	91	271	SY	9965.9	2120.13	2739.53
91	91	270	SY	9188.5	6089.19	11534.19
91	91	383	WB	5.43	-65.97	-55.98
91	91	352	WB	20.11	-17.07	-19.15
91	91	271	WB	164.04	26.12	-33.75
91	91	270	WB	149.37	-22.77	-70.58
92	92	352	DEAD	-28.83	8.23	171.07
92	92	338	DEAD	-20.31	36.62	42.08
92	92	272	DEAD	99.23	72.48	-261.02
92	92	271	DEAD	90.72	44.1	-132.03
92	92	352	LIVE	1304.18	112.77	-82.76
92	92	338	LIVE	1258.46	-39.62	-239.7
92	92	272	LIVE	2163.48	231.88	-531.25
92	92	271	LIVE	2209.19	384.28	-374.3
92	92	352	SX	8046.83	1102.78	1057.09
92	92	338	SX	7998.47	1157.75	2397.98
92	92	272	SX	8505.97	1731.74	4382.11
92	92	271	SX	8713.91	2383.18	2222.41
92	92	352	SY	24596.5	3028.57	2504.46
92	92	338	SY	24626.9	3162.04	1039.39
92	92	272	SY	6329.7	3134.31	5629.62
92	92	271	SY	6411.91	3397.23	3918.72
92	92	352	WB	105.29	8.49	-24.54
92	92	338	WB	100.27	-8.26	-23.24
92	92	272	WB	177.53	14.92	-34.81
92	92	271	WB	182.55	31.67	-36.11
93	93	338	DEAD	227.22	110.88	-193.1
93	93	342	DEAD	210.62	55.55	-375.38

Table 32: Element Stresses - Area Shells, Part 1 of 3

Area	AreaElem	Joint	OutputCase	S11Top	S22Top	S12Top
				Kgf/m2	Kgf/m2	Kgf/m2
93	93	273	DEAD	356.68	99.37	-240.58
93	93	272	DEAD	373.28	154.7	-58.3
93	93	338	LIVE	2249.94	257.82	-261.17
93	93	342	LIVE	2219.85	157.53	-498.68
93	93	273	LIVE	2626.64	279.56	-689.46
93	93	272	LIVE	2656.73	379.86	-451.95
93	93	338	SX	9962.13	1479.72	3288.41
93	93	342	SX	9649.	1812.08	3300.15
93	93	273	SX	13259.16	1019.49	5216.69
93	93	272	SX	13883.13	3277.24	5214.08
93	93	338	SY	16442.31	1136.66	6639.94
93	93	342	SY	17809.48	5383.89	6794.1
93	93	273	SY	5333.64	844.4	3899.85
93	93	272	SY	5709.94	4899.23	3745.27
93	93	338	WB	187.41	17.89	-13.38
93	93	342	WB	185.04	9.98	-24.77
93	93	273	WB	201.44	14.9	-51.16
93	93	272	WB	203.81	22.81	-39.77
94	94	342	DEAD	1582.58	467.14	-520.28
94	94	344	DEAD	1566.07	412.1	-460.47
94	94	274	DEAD	126.16	-19.88	-574.97
94	94	273	DEAD	142.67	35.17	-634.78
94	94	342	LIVE	4285.5	777.22	-1024.34
94	94	344	LIVE	4235.38	610.14	-675.28
94	94	274	LIVE	2623.22	126.49	-559.79
94	94	273	LIVE	2673.34	293.57	-908.84
94	94	342	SX	16104.02	1827.39	2401.97
94	94	344	SX	14947.35	2183.28	2921.5
94	94	274	SX	16313.54	1679.94	5747.05
94	94	273	SX	17483.95	2243.99	5035.75
94	94	342	SY	5399.85	653.7	1209.04
94	94	344	SY	5115.97	1390.32	4173.95
94	94	274	SY	6063.54	548.86	11055.18
94	94	273	SY	6489.27	1074.42	7951.56
94	94	342	WB	290.31	41.56	-65.74
94	94	344	WB	288.22	34.58	-31.77
94	94	274	WB	219.06	13.83	-10.29
94	94	273	WB	221.16	20.81	-44.26
98	98	183	DEAD	-3463.92	-689.2	4118.4
98	98	160	DEAD	-4758.38	-5004.09	4844.97
98	98	264	DEAD	-2522.1	-4385.88	4494.85
98	98	182	DEAD	-1208.78	-8.14	3723.8
98	98	183	LIVE	-4321.22	-1685.54	5725.06
98	98	160	LIVE	-5287.78	-4907.4	6655.14
98	98	264	LIVE	706.95	-3279.33	5921.15
98	98	182	LIVE	1714.28	78.42	4877.66
98	98	183	SX	8457.3	3801.48	7385.22
98	98	160	SX	7744.18	2502.82	7077.16
98	98	264	SX	9810.77	3720.31	4555.39
98	98	182	SX	9231.69	1173.75	4656.28
98	98	183	SY	3723.75	1695.46	10420.41
98	98	160	SY	4855.03	10168.84	7970.48
98	98	264	SY	7175.1	10851.9	5888.97
98	98	182	SY	5075.69	503.49	8069.86

Table 32: Element Stresses - Area Shells, Part 1 of 3

Area	AreaElem	Joint	OutputCase	S11Top	S22Top	S12Top
				Kgf/m2	Kgf/m2	Kgf/m2
98	98	183	WB	-208.72	-128.56	256.78
98	98	160	WB	-202.78	-108.77	298.79
98	98	264	WB	281.91	22.	246.67
98	98	182	WB	278.93	12.05	195.67
99	99	181	DEAD	6158.4	2374.06	3257.94
99	99	182	DEAD	-1141.74	-154.68	3952.75
99	99	264	DEAD	-2694.85	-5369.99	-751.81
99	99	386	DEAD	4601.5	-2941.83	-1289.07
99	99	181	LIVE	7114.74	2346.77	4427.05
99	99	182	LIVE	1986.18	378.91	4836.04
99	99	264	LIVE	126.55	-5868.09	-1522.43
99	99	386	LIVE	5275.66	-3951.69	-1812.56
99	99	181	SX	7759.52	4312.18	6119.29
99	99	182	SX	9243.92	761.9	3873.24
99	99	264	SX	10685.17	5966.9	1618.94
99	99	386	SX	6366.79	934.17	1875.89
99	99	181	SY	7641.42	2410.55	11736.37
99	99	182	SY	5577.48	1204.08	8533.76
99	99	264	SY	5144.56	2989.19	2623.91
99	99	386	SY	7490.69	3590.67	1681.61
99	99	181	WB	222.47	43.7	169.81
99	99	182	WB	300.55	50.95	165.08
99	99	264	WB	232.37	-178.14	-91.77
99	99	386	WB	156.16	-184.07	-87.86
100	100	344	DEAD	3284.04	1460.41	-125.25
100	100	387	DEAD	2158.77	-2316.65	-288.31
100	100	275	DEAD	-449.97	-3868.89	-65.33
100	100	274	DEAD	685.36	-64.19	-121.6
100	100	344	LIVE	5346.54	1176.23	890.96
100	100	387	LIVE	3470.39	-5090.05	747.07
100	100	275	LIVE	2890.27	-4991.14	-413.32
100	100	274	LIVE	4550.65	553.84	-345.85
100	100	344	SX	17637.68	4094.7	6389.37
100	100	387	SX	21366.77	11122.14	3870.4
100	100	275	SX	27659.42	16272.89	1966.87
100	100	274	SX	23283.37	1633.88	6540.22
100	100	344	SY	27838.19	11364.6	17640.37
100	100	387	SY	28583.87	13300.61	12171.63
100	100	275	SY	9798.89	7139.75	2044.82
100	100	274	SY	8196.7	1309.96	9414.31
100	100	344	WB	263.98	7.92	110.29
100	100	387	WB	147.19	-380.43	100.78
100	100	275	WB	287.06	-246.26	-39.33
100	100	274	WB	380.16	63.5	-20.86
101	101	345	DEAD	1219.99	1057.	-1581.35
101	101	274	DEAD	1030.46	418.57	-469.55
101	101	275	DEAD	-722.41	-5424.33	122.6
101	101	174	DEAD	-320.97	-4079.54	-1064.03
101	101	345	LIVE	2692.59	778.53	-2732.45
101	101	274	LIVE	4733.09	887.89	-1271.06
101	101	275	LIVE	2711.56	-5850.55	-706.8
101	101	174	LIVE	943.57	-5051.53	-2072.18
101	101	345	SX	4687.59	3931.67	13024.55
101	101	274	SX	22943.54	4450.99	10405.07

Table 32: Element Stresses - Area Shells, Part 2 of 3

Table 32: Element Stresses - Area Shells, Part 2 of 3

Area	AreaElem	Joint	OutputCase	S11Bot	S22Bot	S12Bot
				Kgf/m2	Kgf/m2	Kgf/m2
1	1	304	DEAD	-63800.65	-14093.	-18605.8
1	1	317	DEAD	55034.96	21557.69	-2901.74
1	1	316	DEAD	52874.64	14356.6	-2898.84
1	1	303	DEAD	-65960.97	-21294.08	-18602.91
1	1	304	LIVE	-97832.28	-22198.88	-34898.82
1	1	317	LIVE	100624.01	37338.01	-7527.05
1	1	316	LIVE	96640.23	24058.76	-7080.12
1	1	303	LIVE	-101816.05	-35478.12	-34451.88
1	1	304	SX	16115.39	4056.82	8508.47
1	1	317	SX	25261.57	8044.35	4837.91
1	1	316	SX	24460.34	5362.68	3931.83
1	1	303	SX	16851.23	6678.4	8850.4
1	1	304	SY	67889.24	14707.09	26637.51
1	1	317	SY	82544.63	30398.23	12024.27
1	1	316	SY	79330.83	19630.56	10351.18
1	1	303	SY	71125.23	25449.76	25517.06
1	1	304	WB	-4872.99	-1140.29	-2158.24
1	1	317	WB	6066.23	2141.47	-576.24
1	1	316	WB	5820.2	1321.39	-514.56
1	1	303	WB	-5119.01	-1960.37	-2096.55
2	2	303	DEAD	-105822.93	-33252.67	-3345.37
2	2	316	DEAD	112065.11	32113.75	-6340.98
2	2	315	DEAD	112039.55	32028.54	-3934.04
2	2	302	DEAD	-105848.49	-33337.87	-938.42
2	2	303	LIVE	-194811.75	-63376.83	-8068.01
2	2	316	LIVE	218514.32	60620.99	-12909.97
2	2	315	LIVE	218687.36	61197.79	-8304.45
2	2	302	LIVE	-194638.71	-62800.03	-3462.48
2	2	303	SX	50431.91	17062.97	4217.64
2	2	316	SX	65744.21	17717.92	5238.22
2	2	315	SX	65768.42	17785.23	5255.74
2	2	302	SX	50418.63	17000.32	3543.38
2	2	303	SY	156054.77	51033.13	8891.15
2	2	316	SY	183982.49	50967.55	10351.54
2	2	315	SY	184190.66	51667.46	7680.19
2	2	302	SY	155839.05	50321.88	6178.24
2	2	303	WB	-11653.35	-3920.67	-534.78
2	2	316	WB	13714.64	3689.72	-801.81
2	2	315	WB	13744.9	3790.57	-511.06
2	2	302	WB	-11623.09	-3819.82	-244.03
3	3	302	DEAD	-109479.27	-34427.11	-613.01
3	3	315	DEAD	123168.11	35367.11	-1586.91
3	3	314	DEAD	123134.04	35253.52	11.43
3	3	301	DEAD	-109513.35	-34540.7	985.33
3	3	302	LIVE	-212164.39	-68057.73	-1136.58
3	3	315	LIVE	245580.11	69265.62	-3382.31
3	3	314	LIVE	245584.59	69280.54	245.83
3	3	301	LIVE	-212159.91	-68042.81	2491.56
3	3	302	SX	72382.64	23651.55	4532.83
3	3	315	SX	86858.51	24145.17	3390.97
3	3	314	SX	87107.92	24972.48	2156.06
3	3	301	SX	72136.7	22827.65	4520.6
3	3	302	SY	173713.67	55793.48	5613.15

Table 32: Element Stresses - Area Shells, Part 2 of 3

Area	AreaElem	Joint	OutputCase	S11Bot	S22Bot	S12Bot
				Kgf/m2	Kgf/m2	Kgf/m2
3	3	315	SY	207414.9	58546.28	5702.53
3	3	314	SY	207529.38	58927.28	4287.11
3	3	301	SY	173599.58	55412.49	6571.48
3	3	302	WB	-13105.13	-4264.44	-59.31
3	3	315	WB	15543.66	4330.2	-222.78
3	3	314	WB	15548.23	4345.43	1.03
3	3	301	WB	-13100.56	-4249.21	164.5
4	4	314	DEAD	115423.14	32940.25	4400.54
4	4	313	DEAD	115322.86	32605.98	7190.59
4	4	300	DEAD	-107102.28	-34121.56	1922.83
4	4	301	DEAD	-107002.	-33787.29	-867.22
4	4	314	LIVE	224355.43	62911.79	10039.65
4	4	313	LIVE	223902.66	61402.54	15221.82
4	4	300	LIVE	-198139.25	-65210.03	5006.63
4	4	301	LIVE	-197686.47	-63700.78	-175.54
4	4	314	SX	89329.42	25609.31	6325.82
4	4	313	SX	88944.55	24338.05	8009.6
4	4	300	SX	79168.22	26055.54	880.75
4	4	301	SX	78793.01	24789.25	2307.9
4	4	314	SY	187883.71	53077.23	10882.96
4	4	313	SY	187177.12	50721.17	14533.04
4	4	300	SY	157947.99	52815.19	4433.47
4	4	301	SY	157236.06	50444.	4630.27
4	4	314	WB	14164.2	3930.22	642.4
4	4	313	WB	14109.48	3747.84	970.76
4	4	300	WB	-11984.69	-4080.41	301.28
4	4	301	WB	-11929.97	-3898.03	-27.07
5	5	300	DEAD	-68541.1	-22553.21	21933.19
5	5	313	DEAD	55562.47	14677.86	510.23
5	5	312	DEAD	57978.79	22732.25	311.
5	5	296	DEAD	-66124.78	-14498.82	21733.96
5	5	300	LIVE	-105126.08	-37306.08	41443.72
5	5	313	LIVE	100589.89	24408.71	1646.74
5	5	312	LIVE	104993.07	39085.97	1536.49
5	5	296	LIVE	-100722.9	-22628.82	41333.48
5	5	300	SX	41163.91	14557.57	20197.36
5	5	313	SX	41140.66	10003.86	3462.41
5	5	312	SX	43232.24	16985.57	4502.97
5	5	296	SX	39093.88	7599.15	20072.71
5	5	300	SY	70469.01	26496.14	36519.37
5	5	313	SY	80654.37	18789.22	2961.65
5	5	312	SY	84365.73	31213.52	4133.19
5	5	296	SY	66737.41	14101.29	36583.58
5	5	300	WB	-5303.39	-2076.02	2595.43
5	5	313	WB	6085.39	1340.62	131.38
5	5	312	WB	6359.98	2255.94	155.52
5	5	296	WB	-5028.79	-1160.69	2619.57
6	6	184	DEAD	-313.38	-9098.95	5592.62
6	6	185	DEAD	2601.72	618.03	5236.9
6	6	228	DEAD	-6275.6	-2045.16	7133.37
6	6	161	DEAD	-9190.7	-11762.15	7489.09
6	6	184	LIVE	-2432.29	-13278.38	7063.71
6	6	185	LIVE	2060.83	1698.71	9235.64
6	6	228	LIVE	-2286.05	394.64	10508.78

Table 32: Element Stresses - Area Shells, Part 2 of 3

Area	AreaElem	Joint	OutputCase	S11Bot	S22Bot	S12Bot
				Kgf/m2	Kgf/m2	Kgf/m2
6	6	161	LIVE	-6779.18	-14582.44	8336.85
6	6	184	SX	4694.66	5165.06	1850.01
6	6	185	SX	3235.	1110.35	2305.83
6	6	228	SX	7151.72	3127.	3825.28
6	6	161	SX	5700.75	2236.03	2440.43
6	6	184	SY	2756.04	5391.87	1734.37
6	6	185	SY	1767.38	3766.66	9742.91
6	6	228	SY	4544.88	3566.08	6664.72
6	6	161	SY	3678.24	4000.37	4286.49
6	6	184	WB	-256.44	-725.67	289.56
6	6	185	WB	-5.31	111.45	547.84
6	6	228	WB	326.11	210.88	533.23
6	6	161	WB	74.97	-626.25	274.96
7	7	163	DEAD	-9307.82	-5191.51	-4048.2
7	7	209	DEAD	-9012.65	-4207.64	-2537.62
7	7	185	DEAD	2159.51	-855.99	3.49
7	7	184	DEAD	1864.35	-1839.86	-1507.09
7	7	163	LIVE	-8445.48	-1252.83	-1276.69
7	7	209	LIVE	-9294.92	-4084.28	-766.51
7	7	185	LIVE	1277.45	-912.57	1840.82
7	7	184	LIVE	2126.89	1918.89	1330.64
7	7	163	SX	2931.6	2293.98	638.72
7	7	209	SX	3518.53	1491.36	3915.04
7	7	185	SX	3266.83	785.84	1837.3
7	7	184	SX	4315.05	3922.89	1950.29
7	7	163	SY	6962.48	4880.24	3226.34
7	7	209	SY	6243.42	1921.07	3876.62
7	7	185	SY	1752.96	3182.43	2547.35
7	7	184	SY	2112.89	4706.35	3699.87
7	7	163	WB	-129.59	226.91	180.21
7	7	209	WB	-224.82	-90.52	115.26
7	7	185	WB	-50.18	-38.12	190.92
7	7	184	WB	45.05	279.3	255.87
8	8	185	DEAD	-3196.98	-1121.58	4959.82
8	8	186	DEAD	-2696.48	546.75	1202.55
8	8	229	DEAD	-1736.83	834.64	2982.5
8	8	228	DEAD	-2237.33	-833.68	6739.77
8	8	185	LIVE	-3856.79	-76.58	8763.31
8	8	186	LIVE	-2999.11	2782.35	1559.13
8	8	229	LIVE	2460.8	4420.32	4265.75
8	8	228	LIVE	1603.12	1561.39	11469.92
8	8	185	SX	3920.24	996.58	2080.85
8	8	186	SX	3433.81	3658.89	4932.49
8	8	229	SX	4898.78	5191.73	3905.87
8	8	228	SX	4288.74	2319.01	3555.76
8	8	185	SY	2681.77	3014.2	9144.11
8	8	186	SY	1984.85	12845.24	7817.57
8	8	229	SY	4138.22	13125.51	2782.84
8	8	228	SY	4141.79	3625.15	15286.62
8	8	185	WB	-165.71	63.33	519.37
8	8	186	WB	-110.2	248.38	51.56
8	8	229	WB	449.22	416.2	187.88
8	8	228	WB	393.7	231.16	655.69
9	9	209	DEAD	-6864.23	-3563.11	-1311.7

Table 32: Element Stresses - Area Shells, Part 2 of 3

Area	AreaElem	Joint	OutputCase	S11Bot	S22Bot	S12Bot
				Kgf/m2	Kgf/m2	Kgf/m2
9	9	210	DEAD	-6125.51	-1100.68	363.85
9	9	186	DEAD	-2900.45	-133.17	1401.97
9	9	185	DEAD	-3639.18	-2595.59	-273.58
9	9	209	LIVE	-8022.92	-3702.68	-62.61
9	9	210	LIVE	-7238.96	-1089.48	2395.06
9	9	186	LIVE	-3856.21	-74.65	3826.17
9	9	185	LIVE	-4640.17	-2687.85	1368.49
9	9	209	SX	1776.23	695.67	2453.39
9	9	210	SX	1932.28	699.15	1358.45
9	9	186	SX	4023.05	643.2	901.67
9	9	185	SX	3972.58	764.23	1836.11
9	9	209	SY	5232.11	1660.8	3555.7
9	9	210	SY	6022.89	1529.67	3805.73
9	9	186	SY	3449.05	679.54	4483.26
9	9	185	SY	2752.37	2336.67	3171.46
9	9	209	WB	-271.19	-104.43	102.64
9	9	210	WB	-245.8	-19.81	234.65
9	9	186	WB	-185.2	-1.63	294.46
9	9	185	WB	-210.58	-86.25	162.45
10	10	186	DEAD	-4908.81	-116.95	1017.57
10	10	187	DEAD	-5381.4	-1692.25	1850.22
10	10	230	DEAD	1133.28	262.15	2689.7
10	10	229	DEAD	1605.87	1837.45	1857.05
10	10	186	LIVE	-4769.27	2251.3	787.99
10	10	187	LIVE	-6131.82	-2290.53	3456.72
10	10	230	LIVE	3380.82	563.26	5146.32
10	10	229	LIVE	4743.37	5105.1	2477.59
10	10	186	SX	2679.66	3743.28	5779.21
10	10	187	SX	3548.39	1362.52	3243.46
10	10	230	SX	2544.6	527.22	3851.47
10	10	229	SX	3606.26	4937.03	6023.29
10	10	186	SY	1725.65	12849.13	9222.74
10	10	187	SY	3611.23	1868.63	2832.84
10	10	230	SY	5091.67	1656.75	4366.39
10	10	229	SY	4972.06	13161.02	6400.98
10	10	186	WB	-105.41	249.81	-15.5
10	10	187	WB	-211.64	-104.28	205.29
10	10	230	WB	286.13	45.05	312.39
10	10	229	WB	392.36	399.15	91.6
11	11	210	DEAD	-5877.48	-1026.28	530.
11	11	211	DEAD	-6076.52	-1689.75	452.64
11	11	187	DEAD	-5311.83	-1460.34	1139.63
11	11	186	DEAD	-5112.79	-796.87	1216.99
11	11	210	LIVE	-8401.93	-1438.37	2735.5
11	11	211	LIVE	-8187.78	-724.54	1626.89
11	11	187	LIVE	-5412.22	108.13	1946.41
11	11	186	LIVE	-5626.37	-605.7	3055.02
11	11	210	SX	3411.41	524.4	1962.53
11	11	211	SX	3204.42	1155.79	2022.42
11	11	187	SX	3162.41	1376.6	2088.58
11	11	186	SX	3273.51	424.08	1131.87
11	11	210	SY	7670.84	1933.73	5295.69
11	11	211	SY	5770.87	4727.01	3213.93
11	11	187	SY	1659.24	6043.56	3152.03

Table 32: Element Stresses - Area Shells, Part 2 of 3

Area	AreaElem	Joint	OutputCase	S11Bot	S22Bot	S12Bot
				Kgf/m2	Kgf/m2	Kgf/m2
11	11	186	SY	3280.79	625.43	3468.25
11	11	210	WB	-397.13	-65.21	255.4
11	11	211	WB	-356.09	71.58	138.54
11	11	187	WB	-139.38	136.59	110.54
11	11	186	WB	-180.42	-0.19	227.4
12	12	187	DEAD	-4792.94	-1515.72	1717.21
12	12	188	DEAD	-6669.92	-7772.32	606.52
12	12	231	DEAD	1092.72	-5443.52	435.82
12	12	230	DEAD	2969.7	813.07	1546.51
12	12	187	LIVE	-5799.53	-2190.84	3663.29
12	12	188	LIVE	-6909.6	-5891.1	3000.55
12	12	231	LIVE	5256.84	-2241.16	2517.48
12	12	230	LIVE	6366.92	1459.09	3180.21
12	12	187	SX	1280.99	640.8	2984.88
12	12	188	SX	1970.69	3801.7	4592.57
12	12	231	SX	3465.35	3989.17	6718.86
12	12	230	SX	3057.7	1206.1	5093.18
12	12	187	SY	3437.81	1662.06	3615.06
12	12	188	SY	1980.57	11898.	7674.76
12	12	231	SY	3530.82	11886.14	6996.35
12	12	230	SY	4534.78	1637.66	3464.47
12	12	187	WB	-217.79	-106.12	238.59
12	12	188	WB	-174.89	36.88	263.44
12	12	231	WB	482.28	234.04	223.29
12	12	230	WB	439.38	91.03	198.44
13	13	211	DEAD	-6888.46	-1933.33	1857.43
13	13	212	DEAD	-7066.93	-2528.23	2207.01
13	13	188	DEAD	-4901.84	-1878.7	1356.19
13	13	187	DEAD	-4723.37	-1283.8	1006.62
13	13	211	LIVE	-9703.71	-1179.32	2298.06
13	13	212	LIVE	-10204.97	-2850.19	2507.15
13	13	188	LIVE	-5581.19	-1463.05	2362.07
13	13	187	LIVE	-5079.93	207.82	2152.98
13	13	211	SX	6032.47	1648.68	2154.33
13	13	212	SX	6437.4	2322.3	2337.68
13	13	188	SX	1297.47	841.07	1878.71
13	13	187	SX	1100.17	1615.21	1886.38
13	13	211	SY	8466.76	4315.51	3644.
13	13	212	SY	9625.2	1228.71	3732.72
13	13	188	SY	2568.27	1669.8	3384.54
13	13	187	SY	1928.32	6163.04	3271.51
13	13	211	WB	-453.97	42.22	90.21
13	13	212	WB	-492.65	-86.72	82.45
13	13	188	WB	-184.21	5.81	136.08
13	13	187	WB	-145.53	134.75	143.84
14	14	188	DEAD	-2784.3	-6606.63	1377.72
14	14	189	DEAD	-4232.51	-11433.99	-1090.11
14	14	232	DEAD	-564.5	-10333.59	219.35
14	14	231	DEAD	883.71	-5506.23	2687.19
14	14	188	LIVE	-3487.26	-4864.39	3290.91
14	14	189	LIVE	-5116.59	-10295.48	117.65
14	14	232	LIVE	2212.92	-8096.63	779.78
14	14	231	LIVE	3842.25	-2665.54	3953.03
14	14	188	SX	537.33	3286.71	5080.29

Table 32: Element Stresses - Area Shells, Part 2 of 3

Area	AreaElem	Joint	OutputCase	S11Bot	S22Bot	S12Bot
				Kgf/m2	Kgf/m2	Kgf/m2
14	14	189	SX	393.47	2771.25	4652.46
14	14	232	SX	7074.53	4783.15	5100.02
14	14	231	SX	7024.51	5016.18	4855.18
14	14	188	SY	799.5	11569.54	8087.44
14	14	189	SY	1516.95	7247.73	4584.19
14	14	232	SY	4083.98	7925.02	11127.81
14	14	231	SY	4761.79	12320.24	3811.67
14	14	188	WB	-138.18	47.9	228.86
14	14	189	WB	-188.95	-121.35	98.49
14	14	232	WB	303.65	26.43	52.78
14	14	231	WB	354.43	195.68	183.15
15	15	172	DEAD	-4813.93	166.12	2595.57
15	15	173	DEAD	-4010.51	94.39	2322.94
15	15	284	DEAD	-4476.2	-1560.55	1765.89
15	15	285	DEAD	-5323.28	-1559.64	1988.94
15	15	172	LIVE	-3289.63	486.22	1631.38
15	15	173	LIVE	-2553.79	764.96	1227.11
15	15	284	LIVE	-2738.55	207.09	1579.86
15	15	285	LIVE	-3487.14	-160.41	2040.64
15	15	172	SX	4469.93	4098.15	13885.92
15	15	173	SX	18222.31	7161.33	12530.72
15	15	284	SX	15683.42	10842.74	6410.25
15	15	285	SX	6573.65	10931.47	6655.82
15	15	172	SY	12052.91	5155.04	26964.5
15	15	173	SY	6653.31	4587.62	24930.57
15	15	284	SY	7799.26	28084.08	9862.16
15	15	285	SY	11953.69	20864.11	10925.73
15	15	172	WB	46.73	-27.94	-40.32
15	15	173	WB	54.3	3.16	-63.55
15	15	284	WB	88.02	129.13	7.48
15	15	285	WB	82.14	93.75	40.12
16	16	212	DEAD	-9229.08	-3176.87	1485.85
16	16	213	DEAD	-12051.33	-12584.35	7660.92
16	16	189	DEAD	-3838.46	-10120.49	8302.47
16	16	188	DEAD	-1016.22	-713.01	2127.39
16	16	212	LIVE	-12495.75	-3537.42	1774.59
16	16	213	LIVE	-14994.45	-11866.42	7567.32
16	16	189	LIVE	-4657.55	-8765.35	8445.16
16	16	188	LIVE	-2158.85	-436.35	2652.43
16	16	212	SX	9491.52	3215.77	2730.35
16	16	213	SX	9680.83	3872.62	3603.
16	16	189	SX	900.18	897.3	2385.64
16	16	188	SX	1078.07	361.36	2207.66
16	16	212	SY	11998.43	1937.71	3781.1
16	16	213	SY	11889.04	2657.84	5342.56
16	16	189	SY	2937.89	2514.2	6192.97
16	16	188	SY	3230.29	1484.01	3939.96
16	16	212	WB	-554.	-105.12	62.96
16	16	213	WB	-579.83	-191.22	153.58
16	16	189	WB	-173.33	-69.27	192.13
16	16	188	WB	-147.5	16.83	101.51
17	17	213	DEAD	-13871.43	-13130.38	17742.21
17	17	164	DEAD	-17896.02	-26545.69	11578.42
17	17	190	DEAD	-1742.76	-21699.71	1883.72

Table 32: Element Stresses - Area Shells, Part 2 of 3

Area	AreaElem	Joint	OutputCase	S11Bot	S22Bot	S12Bot
				Kgf/m2	Kgf/m2	Kgf/m2
17	17	189	DEAD	2281.83	-8284.4	8047.5
17	17	213	LIVE	-16758.91	-12395.76	16928.16
17	17	164	LIVE	-20698.29	-25527.02	10814.14
17	17	190	LIVE	-3179.49	-20271.38	1812.36
17	17	189	LIVE	759.89	-7140.12	7926.38
17	17	213	SX	12816.4	4825.65	4376.56
17	17	164	SX	12111.71	2736.64	3202.38
17	17	190	SX	3186.93	2604.16	3229.53
17	17	189	SX	2349.64	613.99	3134.88
17	17	213	SY	14038.11	3522.82	9401.22
17	17	164	SY	15927.38	9764.44	5745.69
17	17	190	SY	5048.58	7357.27	7074.69
17	17	189	SY	2263.57	2728.33	4567.46
17	17	213	WB	-611.9	-200.84	295.07
17	17	164	WB	-691.41	-465.87	164.48
17	17	190	WB	-194.45	-316.78	24.12
17	17	189	WB	-114.94	-51.75	154.7
18	18	189	DEAD	1887.78	-9597.9	-1345.08
18	18	190	DEAD	906.97	-12867.25	1655.34
18	18	162	DEAD	-2964.03	-14028.55	-6829.14
18	18	232	DEAD	-1983.23	-10759.21	-9829.55
18	18	189	LIVE	300.85	-8670.25	-401.12
18	18	190	LIVE	-445.42	-11157.82	1376.68
18	18	162	LIVE	393.08	-10906.26	-4652.83
18	18	232	LIVE	1139.35	-8418.7	-6430.63
18	18	189	SX	1838.22	2401.12	4003.28
18	18	190	SX	1264.43	5869.76	3463.81
18	18	162	SX	11205.2	8899.74	7543.32
18	18	232	SX	10460.27	5709.39	8917.55
18	18	189	SY	1099.35	7487.8	7690.23
18	18	190	SY	2993.17	18877.42	10108.28
18	18	162	SY	5112.65	18764.34	7488.76
18	18	232	SY	4848.03	7544.87	10260.75
18	18	189	WB	-130.56	-103.83	61.07
18	18	190	WB	-123.01	-78.66	-0.37
18	18	162	WB	314.56	52.61	85.61
18	18	232	WB	307.01	27.44	147.05
19	19	190	DEAD	809.71	-12896.43	871.39
19	19	191	DEAD	2089.55	-8630.32	7785.33
19	19	233	DEAD	-6775.22	-11289.75	15922.43
19	19	162	DEAD	-8055.06	-15555.86	9008.49
19	19	190	LIVE	170.28	-10973.1	787.83
19	19	191	LIVE	976.43	-8285.96	7920.52
19	19	233	LIVE	-4954.98	-10065.38	15472.25
19	19	162	LIVE	-5761.13	-12752.53	8339.55
19	19	190	SX	7096.86	7834.54	3528.27
19	19	191	SX	5922.43	2995.24	4211.44
19	19	233	SX	5642.1	1652.77	6127.32
19	19	162	SX	5122.87	5853.24	5261.8
19	19	190	SY	3840.46	18089.1	9116.02
19	19	191	SY	6001.33	2972.22	10855.43
19	19	233	SY	10750.86	7105.57	19713.47
19	19	162	SY	15223.23	22501.19	17815.63
19	19	190	WB	-45.44	-55.39	4.47

Table 32: Element Stresses - Area Shells, Part 2 of 3

Area	AreaElem	Joint	OutputCase	S11Bot	S22Bot	S12Bot
				Kgf/m2	Kgf/m2	Kgf/m2
19	19	191	WB	-71.54	-142.38	162.03
19	19	233	WB	60.25	-102.84	260.88
19	19	162	WB	86.34	-15.85	103.32
20	20	191	DEAD	-5442.97	-10890.08	6968.32
20	20	192	DEAD	-3639.89	-4879.8	-2248.83
20	20	234	DEAD	-1873.47	-4349.88	-620.34
20	20	233	DEAD	-3676.55	-10360.15	8596.81
20	20	191	LIVE	-6150.61	-10424.07	6947.44
20	20	192	LIVE	-4580.03	-5188.82	-1714.91
20	20	234	LIVE	-30.07	-3823.84	-95.47
20	20	233	LIVE	-1600.65	-9059.08	8566.88
20	20	191	SX	5340.32	2923.42	4692.06
20	20	192	SX	4747.14	1608.88	4524.34
20	20	234	SX	2935.46	2015.05	5146.4
20	20	233	SX	2479.54	1251.3	5142.23
20	20	191	SY	3863.2	4244.75	13382.82
20	20	192	SY	4277.63	4921.94	11989.22
20	20	234	SY	5290.6	3977.68	11189.61
20	20	233	SY	7031.41	5868.42	12565.42
20	20	191	WB	-183.74	-176.04	124.13
20	20	192	WB	-172.56	-138.77	-7.16
20	20	234	WB	156.93	-39.93	28.18
20	20	233	WB	145.75	-77.19	159.48
21	21	192	DEAD	-8583.51	-6362.89	-1755.35
21	21	193	DEAD	-8130.64	-4853.34	1861.94
21	21	235	DEAD	-428.36	-2542.65	3574.81
21	21	234	DEAD	-881.23	-4052.21	-42.48
21	21	192	LIVE	-9241.08	-6587.14	-1278.56
21	21	193	LIVE	-8880.9	-5386.53	1840.01
21	21	235	LIVE	644.85	-2528.81	4074.67
21	21	234	LIVE	284.66	-3729.41	956.09
21	21	192	SX	2706.41	1220.67	4143.17
21	21	193	SX	3035.86	1604.66	3342.91
21	21	235	SX	1982.66	1600.42	3394.21
21	21	234	SX	1771.39	1604.73	3893.32
21	21	192	SY	2258.93	4067.16	9982.14
21	21	193	SY	2480.77	4114.13	7320.33
21	21	235	SY	2327.95	3991.59	4421.72
21	21	234	SY	2475.5	4160.38	7025.88
21	21	192	WB	-245.09	-160.53	-0.44
21	21	193	WB	-242.17	-150.8	22.29
21	21	235	WB	105.83	-46.4	111.54
21	21	234	WB	102.91	-56.13	88.8
22	22	193	DEAD	-5888.19	-4180.6	2172.77
22	22	194	DEAD	-7278.11	-8813.68	-4221.85
22	22	236	DEAD	-3776.62	-7763.23	-4096.53
22	22	235	DEAD	-2386.7	-3130.15	2298.08
22	22	193	LIVE	-7253.6	-4898.34	2276.19
22	22	194	LIVE	-8358.14	-8580.17	-2380.82
22	22	236	LIVE	-2271.62	-6754.21	-2358.49
22	22	235	LIVE	-1167.07	-3072.39	2298.52
22	22	193	SX	601.15	1053.57	2877.02
22	22	194	SX	826.88	465.25	2629.63
22	22	236	SX	7031.95	2439.	4384.64

Table 32: Element Stresses - Area Shells, Part 2 of 3

Area	AreaElem	Joint	OutputCase	S11Bot	S22Bot	S12Bot
				Kgf/m2	Kgf/m2	Kgf/m2
22	22	235	SX	7115.44	2888.91	4202.12
22	22	193	SY	1075.15	4172.21	5529.66
22	22	194	SY	1479.24	2264.2	3176.57
22	22	236	SY	3199.33	2053.44	2807.39
22	22	235	SY	2886.74	3953.11	6544.13
22	22	193	WB	-266.78	-158.19	40.37
22	22	194	WB	-260.81	-138.29	101.57
22	22	236	WB	82.24	-35.38	93.84
22	22	235	WB	76.27	-55.27	32.64
23	23	194	DEAD	-658.53	-6827.81	-4035.75
23	23	195	DEAD	-3607.02	-16656.12	731.28
23	23	177	DEAD	-8982.94	-18268.89	-7103.16
23	23	236	DEAD	-6034.45	-8440.58	-11870.18
23	23	194	LIVE	-2928.68	-6951.33	-2174.58
23	23	195	LIVE	-5044.49	-14004.05	764.52
23	23	177	LIVE	-6335.92	-14391.48	-5943.35
23	23	236	LIVE	-4220.1	-7338.75	-8882.45
23	23	194	SX	3138.1	757.78	2625.65
23	23	195	SX	2987.66	2228.85	3007.12
23	23	177	SX	12174.35	5296.22	5283.01
23	23	236	SX	11856.76	3886.25	5565.06
23	23	194	SY	1680.41	2210.67	3121.41
23	23	195	SY	3880.11	8221.05	5583.89
23	23	177	SY	5556.66	8511.13	4549.91
23	23	236	SY	3982.23	2637.05	3772.41
23	23	194	WB	-264.86	-139.51	108.27
23	23	195	WB	-232.38	-31.22	8.24
23	23	177	WB	99.43	68.32	-18.97
23	23	236	WB	66.94	-39.97	81.07
24	24	285	DEAD	-3915.82	-1221.57	1612.82
24	24	284	DEAD	-3547.03	-1110.93	1648.67
24	24	282	DEAD	-3580.91	-1185.66	1361.78
24	24	283	DEAD	-3955.64	-1298.08	1325.75
24	24	285	LIVE	-2549.09	166.83	2237.59
24	24	284	LIVE	-1467.61	491.28	1875.02
24	24	282	LIVE	-1890.41	-949.19	1475.6
24	24	283	LIVE	-2980.18	-1276.12	1834.52
24	24	285	SX	5608.08	8787.75	3857.81
24	24	284	SX	10809.27	11033.99	6291.11
24	24	282	SX	10549.81	2516.08	4783.88
24	24	283	SX	7959.47	931.83	2453.37
24	24	285	SY	14818.53	17851.96	6529.79
24	24	284	SY	18184.25	27241.05	6632.28
24	24	282	SY	12312.08	6008.41	5953.36
24	24	283	SY	20611.66	4053.66	5895.16
24	24	285	WB	54.25	96.49	74.41
24	24	284	WB	119.25	115.99	36.31
24	24	282	WB	84.27	-5.86	14.86
24	24	283	WB	18.83	-25.49	52.65
25	25	164	DEAD	-14267.11	-25457.01	-10451.66
25	25	214	DEAD	-10528.33	-12994.41	-19676.63
25	25	191	DEAD	1898.76	-9266.28	-8125.21
25	25	190	DEAD	-1840.02	-21728.89	1099.76
25	25	164	LIVE	-19453.71	-25153.64	-9884.82

Table 32: Element Stresses - Area Shells, Part 2 of 3

Area	AreaElem	Joint	OutputCase	S11Bot	S22Bot	S12Bot
				Kgf/m2	Kgf/m2	Kgf/m2
25	25	214	LIVE	-15821.13	-13045.05	-18520.98
25	25	191	LIVE	1068.79	-7978.07	-7412.64
25	25	190	LIVE	-2563.79	-20086.67	1223.51
25	25	164	SX	4093.	2851.6	5005.62
25	25	214	SX	3740.85	1637.37	6934.
25	25	191	SX	5401.33	1125.48	3561.37
25	25	190	SX	5243.63	1509.98	3198.62
25	25	164	SY	6182.39	7391.05	7906.18
25	25	214	SY	4240.03	2043.	7331.
25	25	191	SY	6171.9	1261.94	5646.96
25	25	190	SY	8648.82	8277.19	6293.
25	25	164	WB	-869.6	-519.33	-171.79
25	25	214	WB	-799.62	-286.04	-305.24
25	25	191	WB	-46.89	-60.23	-104.5
25	25	190	WB	-116.88	-293.51	28.96
26	26	214	DEAD	-8560.87	-12404.17	-9196.74
26	26	215	DEAD	-5727.53	-2959.71	177.31
26	26	192	DEAD	-2800.42	-2081.58	431.83
26	26	191	DEAD	-5633.76	-11526.04	-8942.21
26	26	214	LIVE	-13967.91	-12489.08	-8757.58
26	26	215	LIVE	-11410.66	-3964.92	45.51
26	26	192	LIVE	-3500.99	-1592.02	417.36
26	26	191	LIVE	-6058.24	-10116.18	-8385.73
26	26	214	SX	1238.75	685.88	4960.79
26	26	215	SX	1201.79	169.52	4766.82
26	26	192	SX	4917.63	1433.54	4542.08
26	26	191	SX	4772.86	1001.8	4628.4
26	26	214	SY	4870.15	1526.28	5521.03
26	26	215	SY	5205.71	768.12	6178.27
26	26	192	SY	3605.42	1286.08	8792.83
26	26	191	SY	3484.29	2432.25	7781.13
26	26	214	WB	-768.36	-276.66	-154.47
26	26	215	WB	-736.25	-169.64	-18.27
26	26	192	WB	-126.98	13.14	-6.19
26	26	191	WB	-159.09	-93.88	-142.39
27	27	215	DEAD	-3510.01	-2294.46	399.97
27	27	216	DEAD	-3426.7	-2016.75	-2140.43
27	27	193	DEAD	-7660.73	-3286.96	-1615.09
27	27	192	DEAD	-7744.04	-3564.67	925.31
27	27	215	LIVE	-9275.89	-3324.49	249.62
27	27	216	LIVE	-9156.8	-2927.51	-1939.98
27	27	193	LIVE	-8042.94	-2593.35	-1335.9
27	27	192	LIVE	-8162.04	-2990.34	853.7
27	27	215	SX	5425.78	1493.51	5483.23
27	27	216	SX	5265.37	954.47	5167.65
27	27	193	SX	2788.63	395.07	3498.34
27	27	192	SX	2964.69	879.52	3840.69
27	27	215	SY	7354.66	1590.8	6490.86
27	27	216	SY	7451.47	1498.74	5349.09
27	27	193	SY	2806.33	569.53	5483.6
27	27	192	SY	3179.17	2067.31	6905.51
27	27	215	WB	-692.52	-156.52	-20.73
27	27	216	WB	-687.52	-139.86	-33.98
27	27	193	WB	-194.51	8.04	-12.72

Table 32: Element Stresses - Area Shells, Part 2 of 3

Area	AreaElem	Joint	OutputCase	S11Bot	S22Bot	S12Bot
				Kgf/m2	Kgf/m2	Kgf/m2
27	27	192	WB	-199.51	-8.62	0.53
28	28	216	DEAD	-4238.97	-2260.43	-1589.46
28	28	217	DEAD	-5908.35	-7825.05	6034.6
28	28	194	DEAD	-7087.66	-8178.84	6319.8
28	28	193	DEAD	-5418.28	-2614.23	-1304.26
28	28	216	LIVE	-9844.57	-3133.84	-1430.33
28	28	217	LIVE	-11265.52	-7870.33	5380.74
28	28	194	LIVE	-7836.59	-6841.65	5911.36
28	28	193	LIVE	-6415.64	-2105.16	-899.72
28	28	216	SX	10883.69	2640.52	4842.21
28	28	217	SX	11129.54	3509.62	5966.56
28	28	194	SX	725.42	478.57	4242.65
28	28	193	SX	852.1	704.14	3253.47
28	28	216	SY	11287.44	2400.39	4986.23
28	28	217	SY	11314.2	2590.15	5667.25
28	28	194	SY	1685.75	1054.62	4886.69
28	28	193	SY	1679.88	866.26	4251.52
28	28	216	WB	-681.99	-138.2	-22.21
28	28	217	WB	-685.21	-148.94	33.93
28	28	194	WB	-222.35	-10.08	61.51
28	28	193	WB	-219.13	0.66	5.36
29	29	217	DEAD	-7931.75	-8432.07	13733.01
29	29	165	DEAD	-11357.52	-19851.3	7827.45
29	29	195	DEAD	-3893.85	-17612.2	600.33
29	29	194	DEAD	-468.08	-6192.97	6505.9
29	29	217	LIVE	-12872.5	-8352.43	12380.95
29	29	165	LIVE	-16202.23	-19451.51	6935.77
29	29	195	LIVE	-5736.85	-16311.9	672.41
29	29	194	LIVE	-2407.12	-5212.81	6117.59
29	29	217	SX	16526.87	5132.54	6461.15
29	29	165	SX	15562.18	2845.3	5375.83
29	29	195	SX	3896.03	4334.1	3173.95
29	29	194	SX	3096.47	696.21	4169.34
29	29	217	SY	15241.19	3766.79	5569.59
29	29	165	SY	14805.36	9798.67	5012.08
29	29	195	SY	2341.6	9889.32	3626.5
29	29	194	SY	1990.23	1164.62	4771.24
29	29	217	WB	-674.23	-145.65	97.7
29	29	165	WB	-724.52	-313.26	39.96
29	29	195	WB	-276.68	-178.91	10.47
29	29	194	WB	-226.4	-11.3	68.21
30	30	195	DEAD	-4881.51	-17038.46	419.26
30	30	196	DEAD	-1499.83	-5766.21	5355.77
30	30	237	DEAD	-4915.4	-6790.88	11633.63
30	30	177	DEAD	-8297.08	-18063.13	6697.12
30	30	195	LIVE	-6065.64	-14310.39	109.62
30	30	196	LIVE	-3801.2	-6762.26	4282.22
30	30	237	LIVE	-2872.28	-6483.59	9545.92
30	30	177	LIVE	-5136.72	-14031.72	5373.32
30	30	195	SX	6871.13	4152.41	3182.46
30	30	196	SX	5380.62	4333.71	3869.53
30	30	237	SX	13073.24	7682.99	6107.22
30	30	177	SX	11801.67	2756.52	5605.28
30	30	195	SY	7144.91	8928.69	6971.68

Table 32: Element Stresses - Area Shells, Part 2 of 3

Area	AreaElem	Joint	OutputCase	S11Bot	S22Bot	S12Bot
				Kgf/m2	Kgf/m2	Kgf/m2
30	30	196	SY	4260.99	15608.28	9341.99
30	30	237	SY	8911.87	17012.81	12666.72
30	30	177	SY	7379.89	8227.16	10236.8
30	30	195	WB	-228.89	-30.17	-31.8
30	30	196	WB	-281.23	-204.66	-23.25
30	30	237	WB	105.43	-88.66	-13.06
30	30	177	WB	157.77	85.82	-21.6
31	31	196	DEAD	-7220.55	-7482.42	5653.68
31	31	197	DEAD	-7039.59	-6879.22	-4240.23
31	31	238	DEAD	-2566.05	-5537.16	-3637.52
31	31	237	DEAD	-2747.01	-6140.36	6256.39
31	31	196	LIVE	-8403.56	-8142.97	4540.63
31	31	197	LIVE	-8226.28	-7552.04	-3957.53
31	31	238	LIVE	-1448.39	-5518.67	-2815.69
31	31	237	LIVE	-1625.67	-6109.6	5682.47
31	31	196	SX	1417.7	4402.91	3469.27
31	31	197	SX	1828.21	3085.44	2510.87
31	31	238	SX	4728.9	4680.99	6185.34
31	31	237	SX	5114.93	6075.34	4853.68
31	31	196	SY	3100.02	14352.25	7264.81
31	31	197	SY	4125.31	10790.89	1630.61
31	31	238	SY	6455.17	13736.05	9923.68
31	31	237	SY	7486.99	17320.98	3846.26
31	31	196	WB	-272.31	-201.98	-20.86
31	31	197	WB	-268.12	-187.99	-48.55
31	31	238	WB	61.15	-89.21	15.44
31	31	237	WB	56.95	-103.2	43.12
32	32	197	DEAD	-1042.95	-5080.23	-4072.12
32	32	198	DEAD	-4656.93	-17126.83	1570.45
32	32	178	DEAD	-8120.07	-18165.77	-4537.36
32	32	238	DEAD	-4506.09	-6119.17	-10179.93
32	32	197	LIVE	-2944.27	-5967.43	-3597.86
32	32	198	LIVE	-5532.35	-14594.36	1570.36
32	32	178	LIVE	-6090.55	-14761.82	-3434.38
32	32	238	LIVE	-3502.47	-6134.89	-8602.6
32	32	197	SX	4491.05	3950.67	2826.71
32	32	198	SX	4219.73	2447.64	4031.94
32	32	178	SX	3607.44	3275.75	7513.59
32	32	238	SX	3664.75	4289.6	6460.72
32	32	197	SY	3339.71	11204.33	3116.23
32	32	198	SY	7689.49	5966.41	10073.5
32	32	178	SY	4450.72	3979.12	12789.8
32	32	238	SY	8789.51	14532.5	5971.58
32	32	197	WB	-242.18	-180.21	-26.89
32	32	198	WB	-201.26	-43.81	24.54
32	32	178	WB	61.99	35.17	31.92
32	32	238	WB	21.07	-101.23	-19.51
33	33	165	DEAD	-11042.65	-19756.84	-5251.47
33	33	218	DEAD	-6805.6	-5633.35	-10158.2
33	33	196	DEAD	-931.29	-3871.06	-4618.41
33	33	195	DEAD	-5168.33	-17994.55	288.32
33	33	165	LIVE	-16778.22	-19624.31	-4888.15
33	33	218	LIVE	-12700.48	-6031.83	-8985.25
33	33	196	LIVE	-2680.25	-3025.77	-4079.59

Table 32: Element Stresses - Area Shells, Part 2 of 3

Area	AreaElem	Joint	OutputCase	S11Bot	S22Bot	S12Bot
				Kgf/m2	Kgf/m2	Kgf/m2
33	33	195	LIVE	-6757.99	-16618.24	17.51
33	33	165	SX	3183.98	3167.82	6381.45
33	33	218	SX	3645.59	1663.5	7507.42
33	33	196	SX	5750.25	488.47	4476.05
33	33	195	SX	5356.98	2508.18	3557.82
33	33	165	SY	8158.69	7265.39	4984.93
33	33	218	SY	10307.11	1438.66	5291.36
33	33	196	SY	4837.1	1210.86	4414.01
33	33	195	SY	4082.01	9226.04	4177.71
33	33	165	WB	-802.12	-336.54	-61.21
33	33	218	WB	-743.51	-141.18	-63.7
33	33	196	WB	-214.59	17.49	-32.05
33	33	195	WB	-273.19	-177.87	-29.56
34	34	218	DEAD	-5665.89	-5291.44	-4434.19
34	34	219	DEAD	-5737.97	-5531.7	6389.76
34	34	197	DEAD	-6724.09	-5827.54	6503.45
34	34	196	DEAD	-6652.01	-5587.28	-4320.5
34	34	218	LIVE	-11935.76	-5802.42	-3796.23
34	34	219	LIVE	-12026.55	-6105.04	5729.02
34	34	197	LIVE	-7373.4	-4709.09	5704.08
34	34	196	LIVE	-7282.61	-4406.48	-3821.18
34	34	218	SX	6825.51	483.12	5823.41
34	34	219	SX	7148.54	1729.08	4967.12
34	34	197	SX	2674.94	341.76	3091.7
34	34	196	SX	2563.81	1136.78	4010.44
34	34	218	SY	9757.84	674.03	4332.21
34	34	219	SY	9675.55	1840.01	5009.14
34	34	197	SY	6933.99	1262.53	3640.81
34	34	196	SY	7242.2	1196.94	3567.7
34	34	218	WB	-756.23	-145.	-17.58
34	34	219	WB	-758.82	-153.63	36.61
34	34	197	WB	-208.26	11.54	24.54
34	34	196	WB	-205.67	20.17	-29.66
35	35	219	DEAD	-8533.11	-6370.25	12611.79
35	35	166	DEAD	-12319.91	-18992.89	7116.77
35	35	198	DEAD	-4514.24	-16651.19	1176.54
35	35	197	DEAD	-727.45	-4028.55	6671.57
35	35	219	LIVE	-14472.22	-6838.74	11383.63
35	35	166	LIVE	-18072.78	-18840.59	6566.3
35	35	198	LIVE	-5691.94	-15126.34	1246.41
35	35	197	LIVE	-2091.39	-3124.49	6063.75
35	35	219	SX	13685.04	3803.2	5743.54
35	35	166	SX	12861.18	2288.76	5758.81
35	35	198	SX	4894.78	4338.82	2603.53
35	35	197	SX	4443.32	1401.87	2616.32
35	35	219	SY	12343.66	3317.61	6881.58
35	35	166	SY	11301.66	6336.95	6548.41
35	35	198	SY	4806.7	6735.36	5543.62
35	35	197	SY	5851.27	1645.96	5943.5
35	35	219	WB	-766.42	-155.91	83.83
35	35	166	WB	-810.31	-302.22	58.57
35	35	198	WB	-226.22	-126.99	20.93
35	35	197	WB	-182.32	19.32	46.19
36	36	166	DEAD	-12194.31	-18955.21	-5662.93

Table 32: Element Stresses - Area Shells, Part 2 of 3

Area	AreaElem	Joint	OutputCase	S11Bot	S22Bot	S12Bot
				Kgf/m2	Kgf/m2	Kgf/m2
36	36	220	DEAD	-8228.89	-5737.15	-9548.86
36	36	199	DEAD	-1609.51	-3751.34	-2596.76
36	36	198	DEAD	-5574.93	-16969.4	1289.17
36	36	166	LIVE	-17388.01	-18635.16	-5246.7
36	36	220	LIVE	-13576.55	-5930.27	-8892.
36	36	199	LIVE	-3606.41	-2939.23	-2607.63
36	36	198	LIVE	-7417.88	-15644.12	1037.67
36	36	166	SX	3706.99	3748.02	6060.45
36	36	220	SX	3887.64	1738.15	6166.23
36	36	199	SX	3195.26	286.84	3247.65
36	36	198	SX	2648.96	3047.63	3116.82
36	36	166	SY	10365.12	5382.28	5993.73
36	36	220	SY	12009.19	2200.79	6653.49
36	36	199	SY	2883.61	1319.61	6475.55
36	36	198	SY	2157.45	7680.56	5520.16
36	36	166	WB	-750.85	-284.38	-58.12
36	36	220	WB	-701.53	-119.96	-96.01
36	36	199	WB	-256.39	13.58	-45.27
36	36	198	WB	-305.72	-150.84	-7.38
37	37	220	DEAD	-6918.82	-5344.13	-1229.72
37	37	221	DEAD	-5621.31	-1019.1	2479.
37	37	200	DEAD	-7654.53	-1629.06	686.49
37	37	199	DEAD	-8952.03	-5954.09	-3022.23
37	37	220	LIVE	-12478.05	-5600.73	-1162.4
37	37	221	LIVE	-11327.95	-1767.06	2038.8
37	37	200	LIVE	-8580.58	-942.85	-44.13
37	37	199	LIVE	-9730.68	-4776.51	-3245.32
37	37	220	SX	3788.31	259.47	5070.49
37	37	221	SX	4005.99	1284.27	4359.7
37	37	200	SX	1465.1	1406.82	2160.81
37	37	199	SX	1188.42	1166.01	2888.35
37	37	220	SY	7215.5	540.5	7757.87
37	37	221	SY	8212.81	3931.21	8018.57
37	37	200	SY	2972.67	2564.24	5263.16
37	37	199	SY	1955.41	1336.71	5181.44
37	37	220	WB	-697.3	-118.69	-12.45
37	37	221	WB	-690.99	-97.66	-5.63
37	37	200	WB	-253.28	33.65	-66.38
37	37	199	WB	-259.59	12.62	-73.2
38	38	221	DEAD	-6693.63	-1340.8	-857.34
38	38	222	DEAD	-7980.59	-5630.64	4650.16
38	38	201	DEAD	-8512.98	-5790.36	6705.5
38	38	200	DEAD	-7226.03	-1500.51	1198.
38	38	221	LIVE	-12133.71	-2008.79	-1312.2
38	38	222	LIVE	-13409.52	-6261.49	3810.25
38	38	201	LIVE	-9074.97	-4961.12	5828.52
38	38	200	LIVE	-7799.16	-708.42	706.07
38	38	221	SX	8087.2	1839.07	3732.26
38	38	222	SX	8228.75	2165.9	3454.05
38	38	201	SX	3418.44	1301.35	2641.41
38	38	200	SX	3662.42	2102.74	2828.57
38	38	221	SY	6641.83	2850.66	6152.07
38	38	222	SY	6424.5	1559.36	4849.11
38	38	201	SY	2783.71	1173.27	7038.33

Table 32: Element Stresses - Area Shells, Part 2 of 3

Area	AreaElem	Joint	OutputCase	S11Bot	S22Bot	S12Bot
				Kgf/m2	Kgf/m2	Kgf/m2
38	38	200	SY	3289.81	2702.83	8156.92
38	38	221	WB	-684.82	-95.81	-66.86
38	38	222	WB	-708.95	-176.25	9.6
38	38	201	WB	-226.91	-31.63	42.33
38	38	200	WB	-202.77	48.81	-34.12
39	39	222	DEAD	-9991.48	-6233.91	14718.79
39	39	167	DEAD	-15820.05	-25662.48	7580.52
39	39	202	DEAD	-6870.66	-22977.66	-1067.19
39	39	201	DEAD	-1042.09	-3549.09	6071.09
39	39	222	LIVE	-14901.71	-6709.14	13391.33
39	39	167	LIVE	-20553.93	-25549.89	6787.01
39	39	202	LIVE	-7581.71	-21658.23	-1673.2
39	39	201	LIVE	-1929.48	-2817.48	4931.12
39	39	222	SX	12391.82	3412.9	4331.34
39	39	167	SX	11674.2	2614.73	3828.68
39	39	202	SX	5825.31	4728.02	1604.47
39	39	201	SX	5241.19	1852.26	1688.08
39	39	222	SY	8783.87	2218.86	7140.54
39	39	167	SY	7881.14	4280.52	8198.61
39	39	202	SY	3039.85	5589.4	5750.48
39	39	201	SY	2780.31	1134.59	4602.01
39	39	222	WB	-695.43	-172.19	156.86
39	39	167	WB	-794.78	-503.37	68.43
39	39	202	WB	-208.2	-327.4	-82.67
39	39	201	WB	-108.85	3.78	5.75
40	40	167	DEAD	-18848.34	-26570.96	-11031.73
40	40	223	DEAD	-13401.87	-8416.08	-16335.75
40	40	203	DEAD	1698.28	-3886.04	-8336.61
40	40	202	DEAD	-3748.19	-22040.92	-3032.59
40	40	167	LIVE	-21148.14	-25728.16	-11168.8
40	40	223	LIVE	-15853.05	-8077.84	-16634.61
40	40	203	LIVE	266.92	-3241.85	-9130.98
40	40	202	LIVE	-5028.18	-20892.17	-3665.16
40	40	167	SX	1942.96	3912.01	3100.38
40	40	223	SX	2006.1	4010.21	3277.31
40	40	203	SX	2028.7	3128.67	1037.76
40	40	202	SX	2077.5	3075.76	1504.19
40	40	167	SY	4868.94	5569.67	5340.56
40	40	223	SY	5717.04	5091.35	4870.25
40	40	203	SY	2496.7	3996.61	1913.4
40	40	202	SY	1448.19	5090.58	5215.24
40	40	167	WB	-593.05	-442.85	-231.94
40	40	223	WB	-499.86	-132.22	-349.48
40	40	203	WB	-123.48	-19.31	-246.05
40	40	202	WB	-216.67	-329.94	-128.51
41	41	223	DEAD	-9752.52	-7321.28	-6525.68
41	41	224	DEAD	-8221.79	-2218.83	175.91
41	41	204	DEAD	-4069.65	-973.19	-2204.58
41	41	203	DEAD	-5600.38	-6075.63	-8906.16
41	41	223	LIVE	-11799.92	-6861.9	-7302.61
41	41	224	LIVE	-10488.61	-2490.86	-972.69
41	41	204	LIVE	-4888.79	-810.91	-3554.17
41	41	203	LIVE	-6200.1	-5181.95	-9884.09
41	41	223	SX	965.31	3470.3	1299.33

Table 32: Element Stresses - Area Shells, Part 2 of 3

Area	AreaElem	Joint	OutputCase	S11Bot	S22Bot	S12Bot
				Kgf/m2	Kgf/m2	Kgf/m2
41	41	224	SX	1271.74	1260.79	1510.78
41	41	204	SX	1520.18	1016.65	2484.3
41	41	203	SX	821.35	3245.94	1963.8
41	41	223	SY	3981.46	4555.45	2020.24
41	41	224	SY	3504.23	2100.71	933.41
41	41	204	SY	1217.73	1333.78	1690.21
41	41	203	SY	816.37	3705.3	2351.39
41	41	223	WB	-392.37	-99.98	-201.03
41	41	224	WB	-383.81	-71.46	-108.38
41	41	204	WB	-162.52	-5.07	-181.18
41	41	203	WB	-171.07	-33.59	-273.83
42	42	224	DEAD	-6179.5	-1606.15	-1638.44
42	42	225	DEAD	-6604.6	-3023.16	-2506.11
42	42	205	DEAD	-5757.97	-2769.17	-1636.17
42	42	204	DEAD	-5332.86	-1352.16	-768.5
42	42	224	LIVE	-7633.26	-1634.26	-2811.56
42	42	225	LIVE	-8075.93	-3109.8	-3635.31
42	42	205	LIVE	-6451.8	-2622.56	-3029.29
42	42	204	LIVE	-6009.13	-1147.02	-2205.54
42	42	224	SX	2047.13	1420.1	1949.96
42	42	225	SX	1993.57	1931.21	2272.9
42	42	205	SX	1314.69	1499.47	4201.89
42	42	204	SX	1493.51	906.23	3856.33
42	42	224	SY	4025.37	2372.52	1064.55
42	42	225	SY	4205.13	3262.49	1168.
42	42	205	SY	1505.81	1888.74	1966.05
42	42	204	SY	1764.91	937.73	1583.13
42	42	224	WB	-265.55	-35.98	-147.49
42	42	225	WB	-277.4	-75.47	-157.25
42	42	205	WB	-179.22	-46.02	-165.
42	42	204	WB	-167.38	-6.53	-155.24
43	43	225	DEAD	-6462.01	-2980.39	-125.96
43	43	226	DEAD	-6152.89	-1949.98	1637.21
43	43	206	DEAD	-4109.61	-1337.	-407.19
43	43	205	DEAD	-4418.73	-2367.4	-2170.36
43	43	225	LIVE	-7082.12	-2811.66	-1366.06
43	43	226	LIVE	-6898.27	-2198.84	320.55
43	43	206	LIVE	-4663.86	-1528.52	-1943.96
43	43	205	LIVE	-4847.71	-2141.34	-3630.58
43	43	225	SX	2183.75	2038.99	2650.01
43	43	226	SX	2472.1	1500.4	3906.41
43	43	206	SX	629.59	606.84	6351.21
43	43	205	SX	926.78	2019.79	5098.85
43	43	225	SY	4453.86	3340.97	1471.91
43	43	226	SY	4308.41	2436.52	2550.96
43	43	206	SY	1265.03	965.16	3513.17
43	43	205	SY	1109.74	2124.57	2463.55
43	43	225	WB	-192.59	-50.03	-117.6
43	43	226	WB	-197.2	-65.38	-90.06
43	43	206	WB	-135.32	-46.82	-151.99
43	43	205	WB	-130.72	-31.47	-179.53
44	44	226	DEAD	-7402.06	-2324.73	1583.5
44	44	227	DEAD	-8356.68	-5506.8	2397.52
44	44	207	DEAD	-1801.21	-3540.16	1697.3

Table 32: Element Stresses - Area Shells, Part 2 of 3

Area	AreaElem	Joint	OutputCase	S11Bot	S22Bot	S12Bot
				Kgf/m2	Kgf/m2	Kgf/m2
44	44	206	DEAD	-846.59	-358.09	883.28
44	44	226	LIVE	-7210.15	-2292.4	404.05
44	44	227	LIVE	-8281.51	-5863.59	1216.7
44	44	207	LIVE	-2311.71	-4072.65	249.08
44	44	206	LIVE	-1240.35	-501.46	-563.58
44	44	226	SX	2166.39	1432.55	4717.44
44	44	227	SX	2731.98	4455.19	2261.11
44	44	207	SX	1566.5	3326.63	3518.04
44	44	206	SX	2651.23	784.51	5940.26
44	44	226	SY	4590.8	2520.59	3154.21
44	44	227	SY	4397.74	3333.99	1960.47
44	44	207	SY	1261.92	2651.38	2715.44
44	44	206	SY	1442.47	1010.26	3698.26
44	44	226	WB	-134.48	-46.57	-78.01
44	44	227	WB	-164.92	-148.01	-57.18
44	44	207	WB	-91.59	-126.01	-94.01
44	44	206	WB	-61.16	-24.57	-114.84
45	45	198	DEAD	-5717.62	-17445.04	1683.08
45	45	199	DEAD	-1869.86	-4619.16	5291.87
45	45	239	DEAD	1908.51	-3485.65	11342.29
45	45	178	DEAD	-1939.26	-16311.53	7733.5
45	45	198	LIVE	-7258.29	-15112.14	1361.62
45	45	199	LIVE	-4185.04	-4868.	3838.
45	45	239	LIVE	5460.18	-1974.43	8531.44
45	45	178	LIVE	2386.94	-12218.57	6055.06
45	45	198	SX	4344.5	3803.16	3515.25
45	45	199	SX	3647.95	1438.39	1988.7
45	45	239	SX	19203.66	5437.27	4768.79
45	45	178	SX	18667.89	4012.68	5325.08
45	45	198	SY	4304.15	5203.	9771.63
45	45	199	SY	3468.34	1687.84	3023.67
45	45	239	SY	7459.49	2593.41	4374.54
45	45	178	SY	7272.01	4657.25	4607.85
45	45	198	WB	-280.76	-67.66	-3.77
45	45	199	WB	-292.02	-105.2	-58.1
45	45	239	WB	355.91	89.18	-89.4
45	45	178	WB	367.17	126.72	-35.07
46	46	199	DEAD	-9212.38	-6821.92	4866.4
46	46	200	DEAD	-8249.15	-3611.16	1115.32
46	46	240	DEAD	5999.51	663.44	335.48
46	46	239	DEAD	5036.28	-2547.32	4086.55
46	46	199	LIVE	-10309.31	-6705.28	3200.32
46	46	200	LIVE	-9543.7	-4153.25	193.87
46	46	240	LIVE	8538.72	1271.48	-195.09
46	46	239	LIVE	7773.12	-1280.55	2811.36
46	46	199	SX	1203.31	532.99	2342.91
46	46	200	SX	845.4	1439.47	1979.68
46	46	240	SX	13469.86	2887.68	4190.72
46	46	239	SX	13794.76	3830.9	4186.65
46	46	199	SY	2738.87	1690.52	2250.61
46	46	200	SY	1803.47	2191.56	3620.1
46	46	240	SY	6372.37	2295.72	6889.17
46	46	239	SY	7036.14	2824.26	4452.42
46	46	199	WB	-295.23	-106.16	-86.03

Table 32: Element Stresses - Area Shells, Part 2 of 3

Area	AreaElem	Joint	OutputCase	S11Bot	S22Bot	S12Bot
				Kgf/m2	Kgf/m2	Kgf/m2
46	46	200	WB	-299.66	-120.95	-71.14
46	46	240	WB	323.03	65.86	-46.72
46	46	239	WB	327.47	80.65	-61.61
47	47	200	DEAD	-7820.66	-3482.61	1626.83
47	47	201	DEAD	-9342.12	-8554.17	-3219.1
47	47	241	DEAD	5258.44	-4174.	-2693.57
47	47	240	DEAD	6779.9	897.56	2152.36
47	47	200	LIVE	-8762.28	-3918.82	944.07
47	47	201	LIVE	-10095.9	-8364.25	-3486.07
47	47	241	LIVE	7256.93	-3158.4	-3475.5
47	47	240	LIVE	8590.56	1287.03	954.64
47	47	200	SX	2860.45	845.65	2468.35
47	47	201	SX	3138.37	690.39	3661.83
47	47	241	SX	9169.97	2131.74	4334.2
47	47	240	SX	8946.86	1551.72	4069.18
47	47	200	SY	2004.11	2076.23	6730.76
47	47	201	SY	3171.15	2356.71	10607.24
47	47	241	SY	8417.18	3820.23	5764.07
47	47	240	SY	7332.19	1517.5	2259.69
47	47	200	WB	-249.15	-105.8	-38.88
47	47	201	WB	-261.88	-148.21	-97.5
47	47	241	WB	248.17	4.8	-139.35
47	47	240	WB	260.89	47.22	-80.73
48	48	201	DEAD	-1871.23	-6312.9	-3853.5
48	48	202	DEAD	-3841.27	-12879.68	1049.34
48	48	179	DEAD	1020.84	-11421.04	-5392.66
48	48	241	DEAD	2990.88	-4854.27	-10295.5
48	48	201	LIVE	-2950.42	-6220.6	-4383.47
48	48	202	LIVE	-4435.8	-11171.86	-295.53
48	48	179	LIVE	2879.1	-8977.39	-5779.53
48	48	241	LIVE	4364.48	-4026.13	-9867.47
48	48	201	SX	4923.67	907.14	3431.02
48	48	202	SX	5586.5	4698.09	2807.5
48	48	179	SX	5884.34	4958.1	4335.61
48	48	241	SX	5087.05	1246.09	5990.31
48	48	201	SY	3036.45	2155.81	8213.6
48	48	202	SY	4756.92	9699.72	1251.16
48	48	179	SY	12193.04	11719.8	7021.36
48	48	241	SY	10384.79	4527.53	15658.16
48	48	201	WB	-143.82	-112.8	-134.08
48	48	202	WB	-131.89	-73.01	-122.13
48	48	179	WB	147.05	10.67	-156.08
48	48	241	WB	135.12	-29.11	-168.03
49	49	202	DEAD	-718.14	-11942.91	-916.19
49	49	203	DEAD	1401.07	-4877.79	190.92
49	49	367	DEAD	-8877.15	-7960.66	5300.04
49	49	179	DEAD	-10996.76	-15026.35	4192.85
49	49	202	LIVE	-1881.7	-10405.78	-2287.6
49	49	203	LIVE	-195.43	-4783.81	-1341.63
49	49	367	LIVE	-6510.81	-6677.91	2865.9
49	49	179	LIVE	-8197.41	-12300.35	1919.85
49	49	202	SX	3218.55	4235.66	2512.95
49	49	203	SX	2291.31	1865.71	1909.3
49	49	367	SX	20304.81	8279.15	4517.39

Table 32: Element Stresses - Area Shells, Part 2 of 3

Area	AreaElem	Joint	OutputCase	S11Bot	S22Bot	S12Bot
				Kgf/m2	Kgf/m2	Kgf/m2
49	49	179	SX	19841.68	7704.59	6350.65
49	49	202	SY	4081.54	9483.29	1540.63
49	49	203	SY	2396.32	2649.46	6412.04
49	49	367	SY	10286.	5130.49	6097.49
49	49	179	SY	10901.31	10554.33	3085.53
49	49	202	WB	-140.34	-75.55	-167.97
49	49	203	WB	-147.33	-98.8	-170.14
49	49	367	WB	70.19	-33.54	-160.99
49	49	179	WB	77.18	-10.29	-158.81
50	50	203	DEAD	-5898.37	-7067.85	-1538.51
50	50	204	DEAD	-5416.46	-5461.02	-4947.76
50	50	368	DEAD	-6540.98	-5798.56	-4764.18
50	50	242	DEAD	-7023.12	-7405.47	-1354.91
50	50	203	LIVE	-6667.01	-6737.04	-3050.91
50	50	204	LIVE	-6001.24	-4517.33	-6535.25
50	50	368	LIVE	-5303.49	-4308.18	-6085.77
50	50	242	LIVE	-5969.5	-6528.	-2601.42
50	50	203	SX	1185.79	1934.21	2209.56
50	50	204	SX	1430.31	9857.32	4381.25
50	50	368	SX	13912.83	13469.33	4166.13
50	50	242	SX	11722.53	5700.22	2846.67
50	50	203	SY	905.46	2358.77	6754.09
50	50	204	SY	2605.53	11352.2	2092.37
50	50	368	SY	8846.51	12925.73	2313.75
50	50	242	SY	6805.04	4216.85	7218.33
50	50	203	WB	-195.36	-114.5	-204.64
50	50	204	WB	-175.03	-46.7	-259.79
50	50	368	WB	-7.19	3.64	-233.89
50	50	242	WB	-27.53	-64.16	-178.75
51	51	204	DEAD	-6689.14	-5875.82	-3462.73
51	51	205	DEAD	-5817.42	-2968.49	-2410.45
51	51	369	DEAD	-5924.6	-3000.6	-3452.34
51	51	243	DEAD	-6796.66	-5907.94	-4504.75
51	51	204	LIVE	-7133.12	-4896.49	-5365.56
51	51	205	LIVE	-6568.15	-3011.26	-4303.77
51	51	369	LIVE	-4738.4	-2462.28	-5573.19
51	51	243	LIVE	-5303.71	-4347.5	-6635.08
51	51	204	SX	1228.49	9830.94	7031.26
51	51	205	SX	1005.34	3365.04	7835.62
51	51	369	SX	8861.07	5545.29	9445.5
51	51	243	SX	11056.93	12621.99	8648.52
51	51	204	SY	1654.24	11107.32	2617.81
51	51	205	SY	796.89	6181.82	3838.54
51	51	369	SY	4209.3	6792.32	3942.23
51	51	243	SY	5817.88	12054.84	3194.47
51	51	204	WB	-180.32	-49.76	-254.92
51	51	205	WB	-190.09	-82.23	-228.99
51	51	369	WB	8.2	-22.74	-276.45
51	51	243	WB	17.96	9.73	-302.38
52	52	205	DEAD	-4488.05	-2598.6	-2939.14
52	52	206	DEAD	-4773.88	-3551.25	-3485.24
52	52	370	DEAD	-7594.09	-4397.3	-3497.06
52	52	244	DEAD	-7308.13	-3444.6	-2950.9
52	52	205	LIVE	-4977.91	-2574.81	-4963.71

Table 32: Element Stresses - Area Shells, Part 2 of 3

Area	AreaElem	Joint	OutputCase	S11Bot	S22Bot	S12Bot
				Kgf/m2	Kgf/m2	Kgf/m2
52	52	206	LIVE	-5532.6	-4423.97	-5374.59
52	52	370	LIVE	-6228.5	-4632.79	-5546.65
52	52	244	LIVE	-5673.71	-2783.58	-5135.7
52	52	205	SX	871.95	3695.73	9686.97
52	52	206	SX	701.	3286.86	7773.12
52	52	370	SX	5399.96	2047.62	8308.56
52	52	244	SX	6903.43	5028.02	10205.29
52	52	205	SY	862.83	6371.95	5051.52
52	52	206	SY	837.44	3481.22	3511.2
52	52	370	SY	2460.19	3272.69	3843.53
52	52	244	SY	3530.19	6749.81	5175.74
52	52	205	WB	-142.19	-69.64	-247.42
52	52	206	WB	-173.27	-173.28	-243.28
52	52	370	WB	6.51	-119.35	-262.56
52	52	244	WB	37.59	-15.71	-266.7
53	53	206	DEAD	-1520.53	-2604.06	-2574.96
53	53	207	DEAD	-1472.88	-2446.09	-3792.61
53	53	371	DEAD	-10228.35	-5073.03	-5769.57
53	53	245	DEAD	-10275.7	-5230.74	-4551.82
53	53	206	LIVE	-2123.65	-3445.46	-4430.06
53	53	207	LIVE	-2363.72	-4246.26	-5177.78
53	53	371	LIVE	-8618.2	-6122.87	-7245.83
53	53	245	LIVE	-8377.92	-5321.83	-6498.02
53	53	206	SX	1837.95	2780.61	8481.91
53	53	207	SX	1051.38	5545.94	8278.2
53	53	371	SX	1228.51	6004.7	8851.54
53	53	245	SX	1084.89	3228.57	9078.92
53	53	206	SY	829.53	3458.92	4220.46
53	53	207	SY	1497.73	4290.35	5221.35
53	53	371	SY	583.62	4064.72	5411.55
53	53	245	SY	1772.25	3799.12	4386.69
53	53	206	WB	-99.78	-153.29	-216.54
53	53	207	WB	-126.41	-242.05	-196.5
53	53	371	WB	0.33	-204.03	-247.26
53	53	245	WB	26.96	-115.27	-267.3
54	54	255	DEAD	1081.5	-812.38	519.21
54	54	261	DEAD	1374.76	165.98	1604.54
54	54	252	DEAD	-4404.76	-1567.88	2921.59
54	54	156	DEAD	-4698.06	-2546.25	1836.25
54	54	255	LIVE	1139.06	82.72	-85.32
54	54	261	LIVE	1233.17	397.31	1401.55
54	54	252	LIVE	-4053.26	-1188.62	2587.07
54	54	156	LIVE	-4147.43	-1503.22	1100.2
54	54	255	SX	4737.23	5603.57	2911.61
54	54	261	SX	3140.5	656.73	2094.37
54	54	252	SX	5937.74	3276.5	1200.54
54	54	156	SX	4393.26	3627.34	3929.
54	54	255	SY	3535.94	14603.26	11513.71
54	54	261	SY	1900.05	1085.85	4089.35
54	54	252	SY	5806.89	2263.05	3624.66
54	54	156	SY	3226.63	13601.23	10858.53
54	54	255	WB	6.45	52.47	-60.11
54	54	261	WB	-1.5	26.01	11.97
54	54	252	WB	-25.3	18.87	28.27

Table 32: Element Stresses - Area Shells, Part 2 of 3

Area	AreaElem	Joint	OutputCase	S11Bot	S22Bot	S12Bot
				Kgf/m2	Kgf/m2	Kgf/m2
54	54	156	WB	-17.36	45.33	-43.81
55	55	256	DEAD	-3761.64	-571.36	-4593.19
55	55	258	DEAD	-3127.95	1542.72	-915.51
55	55	262	DEAD	-956.65	2194.1	1491.04
55	55	261	DEAD	-1590.49	79.99	-2186.65
55	55	256	LIVE	-3217.38	-14.52	-5380.69
55	55	258	LIVE	-2393.9	2732.56	-407.37
55	55	262	LIVE	-589.52	3273.87	2195.63
55	55	261	LIVE	-1413.19	526.74	-2777.7
55	55	256	SX	2474.55	2750.5	6286.07
55	55	258	SX	3899.46	7931.02	2263.63
55	55	262	SX	2459.98	6287.	5484.34
55	55	261	SX	3815.97	1339.65	3941.29
55	55	256	SY	9265.84	8686.15	20228.87
55	55	258	SY	11836.76	17914.42	1788.24
55	55	262	SY	1038.86	14629.4	7688.84
55	55	261	SY	2564.85	5323.53	14499.71
55	55	256	WB	35.52	64.44	-186.41
55	55	258	WB	72.48	187.73	39.96
55	55	262	WB	4.83	167.44	113.13
55	55	261	WB	-32.14	44.14	-113.24
56	56	262	DEAD	-2484.99	-434.64	-94.45
56	56	263	DEAD	-2766.81	-1373.17	857.78
56	56	254	DEAD	-1780.49	-1077.27	1290.88
56	56	253	DEAD	-1498.7	-138.76	338.66
56	56	262	LIVE	-2416.28	-463.89	70.63
56	56	263	LIVE	-2518.6	-804.05	1224.31
56	56	254	LIVE	-1621.22	-534.84	1204.29
56	56	253	LIVE	-1518.95	-194.69	50.61
56	56	262	SX	2134.05	290.01	1672.9
56	56	263	SX	2730.7	2207.96	1920.65
56	56	254	SX	1317.61	1377.71	1192.73
56	56	253	SX	1699.03	1075.81	2972.51
56	56	262	SY	2700.11	220.97	2317.15
56	56	263	SY	2186.31	3188.17	6401.87
56	56	254	SY	5440.54	2133.36	2778.27
56	56	253	SY	6286.3	1357.9	5647.02
56	56	262	WB	-57.89	-12.07	17.75
56	56	263	WB	-45.34	29.79	62.45
56	56	254	WB	5.92	45.17	24.31
56	56	253	WB	-6.63	3.31	-20.38
57	57	259	DEAD	-4600.92	-1689.77	1924.18
57	57	159	DEAD	-6245.99	-7172.21	2913.69
57	57	260	DEAD	-1158.3	-5645.9	3070.42
57	57	263	DEAD	486.73	-163.47	2080.94
57	57	259	LIVE	-3671.76	-1644.92	2525.22
57	57	159	LIVE	-4957.98	-5931.48	2822.71
57	57	260	LIVE	-948.55	-4728.65	2357.54
57	57	263	LIVE	337.65	-442.1	2060.07
57	57	259	SX	10382.75	2046.55	6868.02
57	57	159	SX	12159.96	8591.22	2482.61
57	57	260	SX	1225.26	5428.72	2826.36
57	57	263	SX	2121.54	1704.48	7102.25
57	57	259	SY	5998.23	974.81	9694.67

Table 32: Element Stresses - Area Shells, Part 2 of 3

Area	AreaElem	Joint	OutputCase	S11Bot	S22Bot	S12Bot
				Kgf/m2	Kgf/m2	Kgf/m2
57	57	159	SY	5447.8	6278.39	4109.74
57	57	260	SY	2861.34	7259.06	3388.32
57	57	263	SY	1364.81	1264.04	4975.02
57	57	259	WB	45.31	-20.83	113.22
57	57	159	WB	41.65	-33.03	50.65
57	57	260	WB	-21.42	-51.95	-17.1
57	57	263	WB	-17.76	-39.75	45.47
58	58	157	DEAD	-6609.01	-4267.48	-2630.37
58	58	256	DEAD	-5671.78	-1144.4	-3491.15
58	58	261	DEAD	1640.11	1049.17	-2582.67
58	58	255	DEAD	702.91	-2073.91	-1721.91
58	58	157	LIVE	-6102.42	-3775.	-1765.28
58	58	256	LIVE	-5147.6	-593.58	-3576.95
58	58	261	LIVE	1538.04	1412.11	-3224.75
58	58	255	LIVE	583.28	-1769.29	-1413.1
58	58	157	SX	4685.96	2776.37	2897.21
58	58	256	SX	5780.41	3655.37	3697.63
58	58	261	SX	3131.44	1527.45	4243.26
58	58	255	SX	4227.08	4022.77	1941.55
58	58	157	SY	2495.16	12411.65	2774.02
58	58	256	SY	8411.38	8443.72	13680.74
58	58	261	SY	1303.08	5986.18	16445.89
58	58	255	SY	6202.39	14827.7	4519.83
58	58	157	WB	-25.98	-43.32	44.88
58	58	256	WB	3.48	54.83	-87.11
58	58	261	WB	7.53	56.04	-128.97
58	58	255	WB	-21.93	-42.1	3.02
59	59	261	DEAD	-1855.82	-803.2	2000.56
59	59	262	DEAD	-1671.78	-190.68	-59.
59	59	253	DEAD	-2454.4	-425.46	156.32
59	59	252	DEAD	-2638.36	-1037.96	2215.87
59	59	261	LIVE	-1718.05	-488.06	1848.6
59	59	262	LIVE	-1640.69	-231.21	-314.44
59	59	253	LIVE	-2394.33	-457.3	30.57
59	59	252	LIVE	-2471.61	-714.13	2193.61
59	59	261	SX	3861.55	429.74	2266.6
59	59	262	SX	4073.82	348.04	2392.49
59	59	253	SX	2891.15	1696.26	3175.26
59	59	252	SX	3078.85	2398.85	904.31
59	59	261	SY	3926.79	780.04	2677.34
59	59	262	SY	4085.46	426.18	6374.84
59	59	253	SY	5509.04	1238.65	4761.14
59	59	252	SY	5547.42	1913.	2001.82
59	59	261	WB	-41.16	14.11	27.7
59	59	262	WB	-48.13	-9.14	-28.09
59	59	253	WB	-18.76	-0.33	-12.16
59	59	252	WB	-11.79	22.92	43.64
60	60	263	DEAD	409.46	-420.28	1933.55
60	60	260	DEAD	-1324.89	-6202.62	-1611.58
60	60	158	DEAD	-3936.17	-6986.	-3885.26
60	60	254	DEAD	-2201.68	-1203.62	-340.1
60	60	263	LIVE	500.59	101.71	1867.95
60	60	260	LIVE	-1172.7	-5476.91	-1014.69
60	60	158	LIVE	-3532.63	-6184.89	-2804.6

Table 32: Element Stresses - Area Shells, Part 2 of 3

Area	AreaElem	Joint	OutputCase	S11Bot	S22Bot	S12Bot
				Kgf/m2	Kgf/m2	Kgf/m2
60	60	254	LIVE	-1859.24	-606.23	78.06
60	60	263	SX	1475.69	1444.67	4110.91
60	60	260	SX	2315.43	4187.28	775.8
60	60	158	SX	3884.89	3281.65	5774.57
60	60	254	SX	4709.9	2364.08	2386.5
60	60	263	SY	949.1	3625.66	5490.58
60	60	260	SY	2917.	10613.95	4390.8
60	60	158	SY	3232.8	8938.16	7397.36
60	60	254	SY	5285.8	2339.36	7799.88
60	60	263	WB	7.89	45.76	38.55
60	60	260	WB	-31.64	-86.01	35.94
60	60	158	WB	-15.77	-81.25	38.13
60	60	254	WB	23.76	50.52	40.74
61	61	258	DEAD	-2418.76	1755.48	1151.09
61	61	259	DEAD	-3338.43	-1311.02	700.7
61	61	263	DEAD	-2689.55	-1116.35	1005.18
61	61	262	DEAD	-1769.86	1950.14	1455.59
61	61	258	LIVE	-994.99	3152.24	1696.59
61	61	259	LIVE	-2311.37	-1236.8	532.35
61	61	263	LIVE	-2681.55	-1347.85	1416.44
61	61	262	LIVE	-1365.12	3041.2	2580.7
61	61	258	SX	4186.94	6321.04	5698.49
61	61	259	SX	5234.7	514.18	5193.89
61	61	263	SX	2108.14	600.99	4622.61
61	61	262	SX	1251.26	6859.23	5772.22
61	61	258	SY	10391.73	17223.76	6161.74
61	61	259	SY	6467.34	1072.13	2258.96
61	61	263	SY	3146.76	1666.9	5717.16
61	61	262	SY	2440.3	15105.18	12789.32
61	61	258	WB	145.48	209.63	83.72
61	61	259	WB	79.42	-10.59	-5.89
61	61	263	WB	-70.99	-55.72	69.37
61	61	262	WB	-4.93	164.51	158.98
62	62	247	DEAD	4323.86	8190.86	2299.56
62	62	180	DEAD	-597.53	-8213.54	2444.51
62	62	159	DEAD	-6542.69	-9997.09	-4345.48
62	62	257	DEAD	-1621.29	6407.32	-4490.58
62	62	247	LIVE	7621.75	10927.59	5605.6
62	62	180	LIVE	2664.77	-5596.12	6260.16
62	62	159	LIVE	-4821.66	-7842.05	-2479.49
62	62	257	LIVE	135.37	8681.67	-3134.2
62	62	247	SX	3995.56	12812.13	1688.21
62	62	180	SX	2348.14	8278.95	2914.26
62	62	159	SX	10251.55	10616.14	10690.9
62	62	257	SX	4871.56	10793.54	11788.87
62	62	247	SY	6142.43	20562.27	7561.
62	62	180	SY	2246.65	13893.98	11411.16
62	62	159	SY	10361.11	16835.05	10890.78
62	62	257	SY	10420.84	21949.	13709.59
62	62	247	WB	460.78	475.33	401.42
62	62	180	WB	351.3	110.34	463.56
62	62	159	WB	86.3	30.84	102.51
62	62	257	WB	195.78	395.83	40.36
63	63	283	DEAD	-3231.01	-1080.71	915.44

Table 32: Element Stresses - Area Shells, Part 2 of 3

Area	AreaElem	Joint	OutputCase	S11Bot	S22Bot	S12Bot
				Kgf/m2	Kgf/m2	Kgf/m2
63	63	282	DEAD	-3694.32	-1219.7	883.33
63	63	280	DEAD	-3679.21	-1212.25	546.25
63	63	281	DEAD	-3222.88	-1075.35	578.37
63	63	283	LIVE	-1708.21	-894.68	1438.94
63	63	282	LIVE	-1976.97	-975.31	1386.02
63	63	280	LIVE	-2074.16	-1304.49	1179.79
63	63	281	LIVE	-1809.67	-1225.14	1231.88
63	63	283	SX	7780.74	703.82	1730.73
63	63	282	SX	7852.85	2372.06	5123.2
63	63	280	SX	7861.99	2472.75	7447.07
63	63	281	SX	7748.56	661.49	3736.74
63	63	283	SY	15059.97	2223.15	5519.23
63	63	282	SY	10980.41	5671.88	5560.66
63	63	280	SY	10696.22	5245.61	7675.06
63	63	281	SY	15304.34	3022.12	7231.94
63	63	283	WB	72.73	-9.33	45.71
63	63	282	WB	75.8	-8.41	36.09
63	63	280	WB	66.11	-38.29	41.99
63	63	281	WB	63.17	-39.17	51.54
64	64	373	DEAD	-6983.4	-5235.16	-2773.74
64	64	244	DEAD	-6937.14	-5080.9	-3244.91
64	64	354	DEAD	-1012.9	-3303.52	-1139.38
64	64	353	DEAD	-1058.93	-3456.98	-667.93
64	64	373	LIVE	-5481.66	-3695.81	-5598.96
64	64	244	LIVE	-5871.81	-4996.3	-5510.25
64	64	354	LIVE	1638.58	-2742.87	-2772.42
64	64	353	LIVE	2029.05	-1441.34	-2860.78
64	64	373	SX	11289.	14270.61	12543.59
64	64	244	SX	7409.4	4706.75	5559.74
64	64	354	SX	19997.93	5161.84	2308.7
64	64	353	SX	23755.31	17322.3	5289.6
64	64	373	SY	7454.02	19150.1	4556.91
64	64	244	SY	4706.91	11193.28	5186.96
64	64	354	SY	9462.86	8369.76	4485.34
64	64	353	SY	9543.38	16722.38	2425.48
64	64	373	WB	13.06	11.74	-338.24
64	64	244	WB	-24.87	-114.71	-310.32
64	64	354	WB	230.69	-38.02	-220.22
64	64	353	WB	268.63	88.46	-248.12
65	65	374	DEAD	-8276.95	-5458.51	-2426.9
65	65	245	DEAD	-7801.46	-3874.54	-925.37
65	65	355	DEAD	-1717.42	-2049.14	-241.73
65	65	354	DEAD	-2192.35	-3632.6	-1742.79
65	65	374	LIVE	-6776.96	-5228.4	-4653.97
65	65	245	LIVE	-6599.37	-4637.67	-3295.88
65	65	355	LIVE	-113.93	-2692.06	-2170.07
65	65	354	LIVE	-290.94	-3282.05	-3527.7
65	65	374	SX	5194.89	4734.58	5094.52
65	65	245	SX	4571.33	4248.46	2476.32
65	65	355	SX	10826.13	3102.06	3223.83
65	65	354	SX	11386.32	4506.65	679.14
65	65	374	SY	3848.91	11039.37	4339.33
65	65	245	SY	2377.88	6275.	2749.
65	65	355	SY	4229.13	5372.44	4813.33

Table 32: Element Stresses - Area Shells, Part 2 of 3

Area	AreaElem	Joint	OutputCase	S11Bot	S22Bot	S12Bot
				Kgf/m2	Kgf/m2	Kgf/m2
65	65	354	SY	4161.5	10077.64	1500.98
65	65	374	WB	5.14	-103.44	-286.62
65	65	245	WB	-13.97	-167.18	-273.16
65	65	355	WB	120.88	-126.74	-228.54
65	65	354	WB	140.	-62.98	-241.98
66	66	375	DEAD	-10632.66	-4719.47	-1679.79
66	66	246	DEAD	-10803.39	-5293.69	1652.26
66	66	356	DEAD	-1200.86	-2415.42	3177.5
66	66	355	DEAD	-1028.22	-1838.54	-152.81
66	66	375	LIVE	-8823.7	-5281.01	-3911.
66	66	246	LIVE	-9487.98	-7499.52	-975.23
66	66	356	LIVE	-731.12	-4874.63	952.78
66	66	355	LIVE	-64.89	-2652.91	-1981.47
66	66	375	SX	1491.32	5494.68	2662.65
66	66	246	SX	2730.15	10536.1	1172.5
66	66	356	SX	4066.26	8593.05	3936.42
66	66	355	SX	5877.49	4020.5	2434.02
66	66	375	SY	2620.25	6811.6	4070.72
66	66	246	SY	1069.92	7795.86	2721.75
66	66	356	SY	1686.06	7478.68	1744.65
66	66	355	SY	2534.81	6281.06	2353.5
66	66	375	WB	11.87	-157.14	-266.42
66	66	246	WB	-35.55	-315.19	-256.6
66	66	356	WB	26.96	-296.44	-209.73
66	66	355	WB	74.41	-138.32	-219.55
67	67	359	DEAD	442.24	253.26	2067.01
67	67	353	DEAD	-322.32	-2287.97	1135.07
67	67	284	DEAD	-3409.23	-3214.09	1696.29
67	67	358	DEAD	-2647.92	-673.99	2627.27
67	67	359	LIVE	4430.88	2882.31	-434.3
67	67	353	LIVE	3475.19	-276.37	949.03
67	67	284	LIVE	-1697.46	-1827.91	4422.82
67	67	358	LIVE	-737.33	1331.17	3038.35
67	67	359	SX	31641.03	19431.	8877.16
67	67	353	SX	28848.35	12637.37	5865.89
67	67	284	SX	11692.68	10770.52	23502.87
67	67	358	SX	8967.75	10583.28	12706.06
67	67	359	SY	12637.8	16970.96	19034.25
67	67	353	SY	11087.21	20064.43	2889.97
67	67	284	SY	18221.98	26644.54	23713.62
67	67	358	SY	17134.16	22730.78	7704.78
67	67	359	WB	375.25	225.79	-231.96
67	67	353	WB	341.9	116.53	-29.28
67	67	284	WB	93.84	42.14	237.98
67	67	358	WB	127.86	151.53	35.27
68	68	353	DEAD	-745.65	-2415.13	1104.13
68	68	354	DEAD	-764.24	-2473.84	866.59
68	68	282	DEAD	-4277.9	-3527.81	1400.52
68	68	284	DEAD	-4259.81	-3469.11	1637.9
68	68	353	LIVE	2270.08	-638.02	1215.83
68	68	354	LIVE	1973.4	-1629.69	110.55
68	68	282	LIVE	-2488.81	-2968.45	898.91
68	68	284	LIVE	-2194.59	-1977.32	2003.75
68	68	353	SX	20896.58	11132.13	12836.21

Table 32: Element Stresses - Area Shells, Part 2 of 3

Area	AreaElem	Joint	OutputCase	S11Bot	S22Bot	S12Bot
				Kgf/m2	Kgf/m2	Kgf/m2
68	68	354	SX	21235.89	9242.2	10585.78
68	68	282	SX	11312.53	7217.08	10747.12
68	68	284	SX	12083.5	11074.79	12237.34
68	68	353	SY	7821.76	20635.92	5379.19
68	68	354	SY	9286.47	10949.95	7713.15
68	68	282	SY	15498.04	16935.02	12252.42
68	68	284	SY	18376.72	26767.34	6453.22
68	68	353	WB	270.6	95.14	-12.96
68	68	354	WB	246.37	13.93	-95.98
68	68	282	WB	75.13	-37.46	-52.84
68	68	284	WB	99.16	43.7	30.15
69	69	354	DEAD	-1951.95	-2830.1	192.71
69	69	355	DEAD	-1986.24	-2948.25	-827.92
69	69	280	DEAD	-4422.91	-3679.25	-97.63
69	69	282	DEAD	-4390.96	-3561.8	922.97
69	69	354	LIVE	31.11	-2212.38	-731.79
69	69	355	LIVE	-391.26	-3620.15	-1581.51
69	69	280	LIVE	-2998.12	-4402.21	-40.1
69	69	282	LIVE	-2577.7	-2995.03	809.23
69	69	354	SX	12665.12	7680.73	9835.13
69	69	355	SX	11033.47	1317.37	7055.82
69	69	280	SX	9592.6	6839.28	8762.54
69	69	282	SX	8776.18	7083.82	11112.04
69	69	354	SY	4531.6	12601.26	9779.8
69	69	355	SY	5069.26	2583.05	4021.8
69	69	280	SY	10623.13	5569.83	4300.14
69	69	282	SY	14167.04	16597.8	5970.02
69	69	354	WB	154.97	-13.49	-123.93
69	69	355	WB	119.94	-129.98	-137.05
69	69	280	WB	31.43	-156.53	-44.77
69	69	282	WB	66.43	-40.06	-31.68
70	70	355	DEAD	-1300.31	-2742.37	-402.34
70	70	356	DEAD	-1447.	-3225.64	-1513.58
70	70	278	DEAD	-5090.07	-4318.88	-1888.45
70	70	280	DEAD	-4945.9	-3836.26	-777.22
70	70	355	LIVE	-351.89	-3608.27	-1115.71
70	70	356	LIVE	-772.87	-5008.34	-2277.18
70	70	278	LIVE	-3997.38	-5975.79	-2164.03
70	70	280	LIVE	-3579.08	-4576.55	-1002.83
70	70	355	SX	6014.37	2409.93	7150.66
70	70	356	SX	5260.73	4644.24	7562.88
70	70	278	SX	8039.4	8530.84	6883.38
70	70	280	SX	7356.44	6174.36	6433.83
70	70	355	SY	2265.13	2898.77	2497.35
70	70	356	SY	2054.8	5998.29	2784.97
70	70	278	SY	6378.65	6381.44	2742.59
70	70	280	SY	7137.86	4754.79	2629.01
70	70	355	WB	72.7	-144.15	-131.14
70	70	356	WB	43.98	-240.04	-146.97
70	70	278	WB	-17.62	-258.5	-101.23
70	70	280	WB	11.07	-162.64	-85.42
71	71	281	DEAD	-2849.49	-963.4	373.54
71	71	280	DEAD	-4203.42	-1369.58	-132.52
71	71	278	DEAD	-4225.33	-1394.5	-560.63

Table 32: Element Stresses - Area Shells, Part 2 of 3

Area	AreaElem	Joint	OutputCase	S11Bot	S22Bot	S12Bot
				Kgf/m2	Kgf/m2	Kgf/m2
71	71	279	DEAD	-2880.27	-990.99	-54.63
71	71	281	LIVE	-948.37	-966.74	957.4
71	71	280	LIVE	-2657.66	-1479.53	217.14
71	71	278	LIVE	-2976.46	-2513.29	-552.63
71	71	279	LIVE	-1283.12	-2005.28	185.02
71	71	281	SX	6750.86	519.34	5730.79
71	71	280	SX	5596.55	2138.76	5261.91
71	71	278	SX	6858.51	4390.05	3155.57
71	71	279	SX	8233.31	4593.78	3947.93
71	71	281	SY	9655.45	1287.28	8938.31
71	71	280	SY	7189.2	4225.71	6178.46
71	71	278	SY	6156.53	2852.1	5769.06
71	71	279	SY	10913.29	5828.98	8578.85
71	71	281	WB	101.35	-27.71	38.13
71	71	280	WB	45.59	-44.44	1.29
71	71	278	WB	15.79	-144.3	-46.23
71	71	279	WB	70.56	-127.87	-9.64
72	72	279	DEAD	-2549.93	-889.12	-863.83
72	72	278	DEAD	-5075.35	-1646.56	-861.35
72	72	170	DEAD	-5810.62	-4099.9	-1113.42
72	72	171	DEAD	-3290.36	-3344.18	-1115.79
72	72	279	LIVE	-932.85	-1893.97	-1112.98
72	72	278	LIVE	-3377.2	-2627.28	-990.69
72	72	170	LIVE	-4284.13	-5657.55	-1980.32
72	72	171	LIVE	-1860.99	-4933.03	-2104.2
72	72	279	SX	6823.22	4433.07	4086.21
72	72	278	SX	7075.39	4408.49	4938.08
72	72	170	SX	6393.78	3162.38	8833.27
72	72	171	SX	6015.23	3064.64	5657.94
72	72	279	SY	5188.82	4313.26	7949.72
72	72	278	SY	4074.41	2570.63	7917.83
72	72	170	SY	3525.06	5195.89	10122.93
72	72	171	SY	5301.83	6592.24	9465.16
72	72	279	WB	60.75	-130.37	-79.34
72	72	278	WB	50.79	-133.43	-64.27
72	72	170	WB	9.46	-271.55	-146.82
72	72	171	WB	17.6	-269.31	-162.23
73	73	359	DEAD	195.73	-642.74	-1028.77
73	73	360	DEAD	-4443.52	-2003.61	510.27
73	73	243	DEAD	-5279.04	-4733.45	995.87
73	73	353	DEAD	-626.58	-3348.54	-555.59
73	73	359	LIVE	4245.61	2183.97	-2136.8
73	73	360	LIVE	-3103.11	-4.07	-2086.58
73	73	243	LIVE	-4093.78	-3295.63	-3030.91
73	73	353	LIVE	3243.06	-1110.41	-3099.16
73	73	359	SX	31754.51	18408.84	1350.59
73	73	360	SX	8624.51	11770.17	9042.75
73	73	243	SX	8909.91	13563.65	20485.16
73	73	353	SX	31746.53	19481.51	12546.41
73	73	359	SY	14308.76	8015.81	3623.58
73	73	360	SY	3460.6	8859.03	6286.89
73	73	243	SY	4864.31	18438.72	7819.28
73	73	353	SY	12797.85	16403.54	6352.09
73	73	359	WB	382.37	248.24	-151.02

Table 32: Element Stresses - Area Shells, Part 2 of 3

Area	AreaElem	Joint	OutputCase	S11Bot	S22Bot	S12Bot
				Kgf/m2	Kgf/m2	Kgf/m2
73	73	360	WB	59.46	150.69	-247.87
73	73	243	WB	18.92	12.45	-364.17
73	73	353	WB	339.89	108.17	-268.1
75	75	182	DEAD	-2185.76	-293.9	3920.14
75	75	265	DEAD	-2849.69	-2507.	3207.31
75	75	334	DEAD	-1375.33	-2064.7	2453.58
75	75	183	DEAD	-711.4	148.41	3166.41
75	75	182	LIVE	262.12	-334.54	5470.76
75	75	265	LIVE	-376.42	-2463.02	4319.8
75	75	334	LIVE	-987.1	-2646.22	3141.8
75	75	183	LIVE	-348.56	-517.74	4292.76
75	75	182	SX	5673.37	175.22	5425.04
75	75	265	SX	6099.17	1704.12	4543.28
75	75	334	SX	2890.62	788.9	5349.35
75	75	183	SX	3111.6	2021.9	6143.57
75	75	182	SY	5812.85	587.91	8824.48
75	75	265	SY	5687.86	1169.13	7354.57
75	75	334	SY	5349.63	2683.02	3593.95
75	75	183	SY	5146.35	1614.4	5014.99
75	75	182	WB	198.73	-10.07	241.51
75	75	265	WB	188.72	-43.43	182.
75	75	334	WB	-29.79	-108.99	126.3
75	75	183	WB	-19.78	-75.62	185.82
76	76	265	DEAD	-2453.72	-2388.21	868.93
76	76	266	DEAD	-1879.69	-474.78	-285.6
76	76	335	DEAD	649.3	283.91	276.77
76	76	334	DEAD	75.27	-1629.52	1431.29
76	76	265	LIVE	-387.48	-2466.33	1338.
76	76	266	LIVE	383.16	102.45	297.05
76	76	335	LIVE	1930.27	566.58	928.29
76	76	334	LIVE	1159.63	-2002.2	1969.23
76	76	265	SX	2792.53	642.9	4431.96
76	76	266	SX	2945.4	1081.11	5602.36
76	76	335	SX	7710.04	2145.77	7413.33
76	76	334	SX	7670.91	2030.83	6321.08
76	76	265	SY	5527.37	969.16	2906.01
76	76	266	SY	6242.82	2214.08	2574.78
76	76	335	SY	9692.4	3323.04	5841.8
76	76	334	SY	9600.38	3704.75	7284.02
76	76	265	WB	150.84	-54.8	69.97
76	76	266	WB	181.48	47.33	55.01
76	76	335	WB	106.39	24.81	74.41
76	76	334	WB	75.75	-77.33	89.37
77	77	266	DEAD	-1953.51	-496.93	484.33
77	77	267	DEAD	-1850.33	-153.01	516.81
77	77	347	DEAD	864.68	661.5	-73.58
77	77	335	DEAD	761.51	317.58	-106.06
77	77	266	LIVE	268.22	67.97	1335.35
77	77	267	LIVE	248.62	2.65	1361.74
77	77	347	LIVE	2530.23	687.13	673.68
77	77	335	LIVE	2549.83	752.45	647.29
77	77	266	SX	2637.47	1398.71	6091.82
77	77	267	SX	2600.05	1982.78	8052.96
77	77	347	SX	15214.18	3576.41	8588.79

Table 32: Element Stresses - Area Shells, Part 2 of 3

Area	AreaElem	Joint	OutputCase	S11Bot	S22Bot	S12Bot
				Kgf/m2	Kgf/m2	Kgf/m2
77	77	335	SX	15465.95	4283.	8455.46
77	77	266	SY	5399.37	2095.64	9821.14
77	77	267	SY	4865.23	4235.18	20377.99
77	77	347	SY	14836.81	7824.55	7206.21
77	77	335	SY	14110.3	4600.55	6633.59
77	77	266	WB	172.04	44.5	94.78
77	77	267	WB	162.73	13.5	95.83
77	77	347	WB	153.73	10.8	74.97
77	77	335	WB	163.03	41.8	73.92
78	78	267	DEAD	-1349.45	-2.74	59.35
78	78	268	DEAD	-1724.02	-1251.3	852.32
78	78	349	DEAD	937.02	-452.98	997.56
78	78	347	DEAD	1311.59	795.57	204.6
78	78	267	LIVE	337.05	29.18	843.74
78	78	268	LIVE	-107.05	-1451.13	1618.13
78	78	349	LIVE	3486.49	-373.07	1738.48
78	78	347	LIVE	3930.58	1107.24	964.09
78	78	267	SX	3250.18	2422.3	7167.74
78	78	268	SX	3654.87	5299.39	10337.35
78	78	349	SX	13942.41	7212.2	10616.92
78	78	347	SX	13140.93	3299.64	9326.24
78	78	267	SY	4565.65	3317.95	12841.54
78	78	268	SY	4463.84	20119.28	14465.22
78	78	349	SY	22969.12	25723.6	6195.27
78	78	347	SY	18456.4	8947.95	22893.16
78	78	267	WB	127.7	2.99	83.12
78	78	268	WB	115.17	-38.79	92.05
78	78	349	WB	255.36	3.27	91.39
78	78	347	WB	267.89	45.04	82.46
79	79	268	DEAD	-1464.53	-1173.45	1904.34
79	79	269	DEAD	-1544.61	-1440.38	843.6
79	79	336	DEAD	2022.94	-370.12	-514.09
79	79	349	DEAD	2103.01	-103.19	546.65
79	79	268	LIVE	108.62	-1386.43	2651.31
79	79	269	LIVE	-103.4	-2093.14	1225.42
79	79	336	LIVE	5647.83	-367.77	-254.14
79	79	349	LIVE	5859.84	338.94	1171.75
79	79	268	SX	2004.82	4866.21	11654.05
79	79	269	SX	1408.6	1757.52	8172.38
79	79	336	SX	18432.46	4192.25	9779.83
79	79	349	SX	19814.53	9433.5	12140.59
79	79	268	SY	4019.85	19194.54	25801.1
79	79	269	SY	6965.74	2028.38	11534.23
79	79	336	SY	19297.41	8890.97	7250.13
79	79	349	SY	24292.15	26333.37	9778.29
79	79	268	WB	102.56	-42.57	104.34
79	79	269	WB	86.41	-96.41	56.93
79	79	336	WB	417.01	2.77	28.44
79	79	349	WB	433.16	56.61	75.85
80	80	269	DEAD	-948.4	-1261.52	-1033.91
80	80	270	DEAD	-727.02	-523.58	-1302.05
80	80	337	DEAD	1868.42	255.06	-668.61
80	80	336	DEAD	1647.04	-482.89	-400.47
80	80	269	LIVE	479.6	-1918.24	-1207.82

Table 32: Element Stresses - Area Shells, Part 2 of 3

Area	AreaElem	Joint	OutputCase	S11Bot	S22Bot	S12Bot
				Kgf/m2	Kgf/m2	Kgf/m2
80	80	270	LIVE	833.	-740.22	-1742.78
80	80	337	LIVE	5676.62	712.86	-1001.64
80	80	336	LIVE	5323.22	-465.15	-466.68
80	80	269	SX	6412.43	666.64	7855.11
80	80	270	SX	7002.12	3464.02	8559.69
80	80	337	SX	11453.57	5873.91	11051.97
80	80	336	SX	10381.83	2730.65	12006.82
80	80	269	SY	9636.38	1592.04	7278.63
80	80	270	SY	8913.47	5590.85	16883.05
80	80	337	SY	22336.94	13949.24	5932.6
80	80	336	SY	20786.22	9250.77	7149.15
80	80	269	WB	87.39	-96.11	-25.2
80	80	270	WB	102.27	-46.52	-59.8
80	80	337	WB	439.06	54.51	-39.26
80	80	336	WB	424.18	4.93	-4.65
81	81	270	DEAD	-384.22	-420.74	-740.6
81	81	271	DEAD	-423.12	-550.39	-461.42
81	81	341	DEAD	1344.63	-20.07	-1198.91
81	81	337	DEAD	1383.53	109.59	-1478.08
81	81	270	LIVE	1609.63	-507.23	-1176.7
81	81	271	LIVE	1558.96	-676.13	-909.79
81	81	341	LIVE	4811.27	299.56	-1758.45
81	81	337	LIVE	4861.94	468.46	-2025.36
81	81	270	SX	11491.07	4590.36	7555.09
81	81	271	SX	10858.47	3951.31	10351.61
81	81	341	SX	13038.24	6853.63	11220.15
81	81	337	SX	13116.08	6350.46	10699.86
81	81	270	SY	9390.49	5664.16	10080.59
81	81	271	SY	7855.77	10994.68	11784.1
81	81	341	SY	27967.07	20777.7	4791.83
81	81	337	SY	26394.11	15196.59	22595.64
81	81	270	WB	146.22	-33.34	-56.4
81	81	271	WB	148.74	-24.93	-54.96
81	81	341	WB	384.75	45.87	-75.25
81	81	337	WB	382.22	37.46	-76.68
82	82	271	DEAD	-54.45	-439.8	-528.14
82	82	272	DEAD	20.68	-189.34	-474.19
82	82	339	DEAD	2012.97	408.35	-448.52
82	82	341	DEAD	1937.83	157.89	-502.47
82	82	271	LIVE	1923.92	-566.64	-983.04
82	82	272	LIVE	2051.55	-141.19	-960.97
82	82	339	LIVE	5469.77	884.27	-998.83
82	82	341	LIVE	5342.13	458.82	-1020.89
82	82	271	SX	8561.71	4143.01	11473.41
82	82	272	SX	7574.62	2700.92	7680.45
82	82	339	SX	34164.03	5923.36	8996.37
82	82	341	SX	35465.19	10937.38	12421.96
82	82	271	SY	5412.72	12398.89	15100.76
82	82	272	SY	8353.29	6860.6	7041.47
82	82	339	SY	25291.62	2930.89	4072.41
82	82	341	SY	30607.05	21280.51	10524.94
82	82	271	WB	167.24	-19.38	-57.33
82	82	272	WB	173.12	0.24	-62.76
82	82	339	WB	330.58	47.47	-65.77

Table 32: Element Stresses - Area Shells, Part 2 of 3

Area	AreaElem	Joint	OutputCase	S11Bot	S22Bot	S12Bot
				Kgf/m2	Kgf/m2	Kgf/m2
82	82	341	WB	324.69	27.85	-60.33
83	83	272	DEAD	294.73	-107.13	-271.46
83	83	273	DEAD	372.2	151.11	-176.32
83	83	343	DEAD	1602.81	520.29	-516.61
83	83	339	DEAD	1525.34	262.06	-611.75
83	83	272	LIVE	2544.81	6.78	-881.68
83	83	273	LIVE	2622.82	266.83	-710.52
83	83	343	LIVE	4590.73	857.21	-915.24
83	83	339	LIVE	4512.71	597.15	-1086.4
83	83	272	SX	12856.82	1603.06	8564.22
83	83	273	SX	12945.15	269.19	9247.79
83	83	343	SX	23730.71	3261.8	10220.43
83	83	339	SX	23556.11	2675.72	9454.43
83	83	272	SY	5192.87	5088.87	5279.81
83	83	273	SY	5144.18	825.47	7563.33
83	83	343	SY	19822.13	4680.25	11069.53
83	83	339	SY	18649.21	1221.8	8621.26
83	83	272	WB	199.41	8.12	-67.72
83	83	273	WB	202.	16.75	-56.59
83	83	343	WB	275.42	38.78	-52.34
83	83	339	WB	272.83	30.15	-63.47
84	84	273	DEAD	158.19	86.91	-570.52
84	84	274	DEAD	258.29	420.57	-682.33
84	84	345	DEAD	1447.06	777.2	105.25
84	84	343	DEAD	1346.96	443.54	217.05
84	84	273	LIVE	2669.52	280.84	-929.9
84	84	274	LIVE	2698.54	377.56	-1279.51
84	84	345	LIVE	3930.76	747.23	-567.08
84	84	343	LIVE	3901.75	650.51	-217.46
84	84	273	SX	17173.52	1240.33	9001.18
84	84	274	SX	17145.6	1353.46	9765.48
84	84	345	SX	13405.44	2126.74	11600.03
84	84	343	SX	13325.24	1062.04	10813.04
84	84	273	SY	6273.51	595.25	11581.6
84	84	274	SY	6544.92	2345.9	10295.17
84	84	345	SY	12894.93	5052.32	7942.62
84	84	343	SY	12167.49	2371.62	9120.91
84	84	273	WB	221.71	22.67	-49.68
84	84	274	WB	215.74	2.77	-75.77
84	84	345	WB	220.18	4.1	-65.24
84	84	343	WB	226.15	24.	-39.16
85	85	250	DEAD	-2178.04	-3441.33	2818.73
85	85	251	DEAD	-1192.37	-155.74	435.18
85	85	270	DEAD	-559.73	34.05	-1835.23
85	85	269	DEAD	-1545.4	-3251.54	548.31
85	85	250	LIVE	-1742.63	-4960.69	3631.75
85	85	251	LIVE	-494.89	-801.58	1649.94
85	85	270	LIVE	944.1	-369.88	-1836.13
85	85	269	LIVE	-303.63	-4528.99	145.68
85	85	250	SX	3912.55	9583.9	3864.21
85	85	251	SX	2632.87	4563.97	3603.03
85	85	270	SX	7120.37	4751.81	3519.34
85	85	269	SX	7256.22	9336.92	5429.81
85	85	250	SY	10534.28	34453.04	12634.88

Table 32: Element Stresses - Area Shells, Part 2 of 3

Area	AreaElem	Joint	OutputCase	S11Bot	S22Bot	S12Bot
				Kgf/m2	Kgf/m2	Kgf/m2
85	85	251	SY	4114.3	11098.68	15602.29
85	85	270	SY	8275.76	8356.65	6969.94
85	85	269	SY	3577.68	31367.71	11722.03
85	85	250	WB	1.29	-204.87	111.
85	85	251	WB	41.17	-71.96	108.35
85	85	270	WB	99.93	-54.33	-37.01
85	85	269	WB	60.05	-187.25	-34.36
86	86	248	DEAD	-1431.73	-5266.87	4679.02
86	86	249	DEAD	141.34	-23.3	4316.65
86	86	266	DEAD	-1930.73	-644.92	143.5
86	86	265	DEAD	-3503.8	-5888.49	505.86
86	86	248	LIVE	-757.15	-6195.49	6367.8
86	86	249	LIVE	1113.51	40.06	5764.54
86	86	266	LIVE	290.36	-206.89	965.17
86	86	265	LIVE	-1580.31	-6442.44	1568.42
86	86	248	SX	2676.82	1782.07	5806.19
86	86	249	SX	2678.57	3536.14	6772.34
86	86	266	SX	3624.22	3964.11	4048.9
86	86	265	SX	3049.16	1599.17	4115.82
86	86	248	SY	1640.22	3470.17	11295.25
86	86	249	SY	2402.68	9851.82	14829.16
86	86	266	SY	5851.82	9851.74	9112.5
86	86	265	SY	5222.67	2855.82	5657.77
86	86	248	WB	41.4	-204.74	258.8
86	86	249	WB	103.99	3.91	227.59
86	86	266	WB	174.83	25.16	84.26
86	86	265	WB	112.24	-183.49	115.48
87	87	181	DEAD	62.76	130.55	5951.83
87	87	380	DEAD	-1052.09	-3590.59	1767.55
87	87	265	DEAD	-3384.1	-4287.96	66.31
87	87	182	DEAD	-2268.47	-567.62	4250.52
87	87	181	LIVE	-460.55	-428.13	6865.76
87	87	380	LIVE	-1704.1	-4578.68	2364.72
87	87	265	LIVE	-941.92	-4347.87	1012.83
87	87	182	LIVE	302.55	-197.86	5514.08
87	87	181	SX	2737.82	2456.4	4957.42
87	87	380	SX	2373.48	1051.09	1347.94
87	87	265	SX	6431.38	2719.3	3459.62
87	87	182	SX	5581.94	513.16	4240.61
87	87	181	SY	6121.16	2728.33	9062.89
87	87	380	SY	4904.91	3067.81	1685.98
87	87	265	SY	5655.91	3512.73	1749.06
87	87	182	SY	6212.06	1894.67	9435.42
87	87	181	WB	-39.8	-52.04	209.15
87	87	380	WB	-76.16	-173.39	99.52
87	87	265	WB	172.09	-98.88	101.72
87	87	182	WB	208.48	22.48	211.38
88	88	381	DEAD	1553.04	181.76	622.
88	88	346	DEAD	1757.9	864.39	1478.36
88	88	267	DEAD	-1871.79	-224.83	1001.19
88	88	266	DEAD	-2076.3	-907.11	145.11
88	88	381	LIVE	2765.71	179.49	270.62
88	88	346	LIVE	2999.63	956.99	2755.08
88	88	267	LIVE	291.16	144.42	1726.87

Table 32: Element Stresses - Area Shells, Part 2 of 3

Area	AreaElem	Joint	OutputCase	S11Bot	S22Bot	S12Bot
				Kgf/m2	Kgf/m2	Kgf/m2
88	88	266	LIVE	58.16	-632.26	-757.37
88	88	381	SX	2573.44	2127.7	2191.95
88	88	346	SX	2277.62	996.96	4265.8
88	88	267	SX	2634.17	1699.38	4110.98
88	88	266	SX	2968.92	2620.4	3142.04
88	88	381	SY	7059.01	4736.51	5028.34
88	88	346	SY	7680.01	1653.92	7468.37
88	88	267	SY	5140.05	3695.52	10074.03
88	88	266	SY	5467.92	6783.66	9601.55
88	88	381	WB	148.08	-0.45	-19.34
88	88	346	WB	156.77	28.32	154.79
88	88	267	WB	168.21	31.77	91.36
88	88	266	WB	159.58	3.05	-82.77
89	89	346	DEAD	-840.91	84.81	511.65
89	89	348	DEAD	-796.66	232.27	698.81
89	89	268	DEAD	-1326.65	73.28	731.
89	89	267	DEAD	-1370.89	-74.19	543.84
89	89	346	LIVE	-302.18	-33.15	623.95
89	89	348	LIVE	-262.04	100.65	830.66
89	89	268	LIVE	419.86	305.22	1415.66
89	89	267	LIVE	379.72	171.42	1208.94
89	89	346	SX	3873.12	1096.45	1063.92
89	89	348	SX	4055.22	1101.88	1762.58
89	89	268	SX	2804.49	716.53	1790.58
89	89	267	SX	2670.87	1101.61	2838.2
89	89	346	SY	13958.81	969.62	1488.88
89	89	348	SY	14423.8	2558.83	970.18
89	89	268	SY	5053.6	1031.39	2516.37
89	89	267	SY	4898.92	2667.35	3403.44
89	89	346	WB	34.46	-8.34	20.76
89	89	348	WB	35.3	-5.52	25.07
89	89	268	WB	134.03	24.1	82.96
89	89	267	WB	133.19	21.28	78.65
90	90	348	DEAD	-2187.99	-185.41	2469.14
90	90	382	DEAD	-3049.37	-3060.22	-425.55
90	90	269	DEAD	-1929.66	-2723.88	-1111.92
90	90	268	DEAD	-1067.4	150.98	1782.94
90	90	348	LIVE	-2971.49	-712.56	3824.56
90	90	382	LIVE	-4145.68	-4630.62	454.1
90	90	269	LIVE	-539.84	-3548.2	-922.04
90	90	268	LIVE	635.32	369.72	2448.72
90	90	348	SX	5504.4	1705.6	2985.63
90	90	382	SX	3569.99	6364.32	1171.92
90	90	269	SX	2769.65	7772.16	4179.79
90	90	268	SX	1567.52	200.6	2809.12
90	90	348	SY	10597.78	2659.9	8373.92
90	90	382	SY	5298.13	25065.3	5614.5
90	90	269	SY	4655.43	25885.79	9688.78
90	90	268	SY	7559.8	345.02	12007.64
90	90	348	WB	-109.96	-49.12	176.7
90	90	382	WB	-155.71	-201.75	72.52
90	90	269	WB	75.65	-132.31	-8.95
90	90	268	WB	121.42	20.31	95.25
91	91	383	DEAD	204.81	223.28	107.63

Table 32: Element Stresses - Area Shells, Part 2 of 3

Area	AreaElem	Joint	OutputCase	S11Bot	S22Bot	S12Bot
				Kgf/m2	Kgf/m2	Kgf/m2
91	91	352	DEAD	157.21	63.69	313.92
91	91	271	DEAD	-277.98	-66.35	-65.25
91	91	270	DEAD	-230.24	93.54	-271.5
91	91	383	LIVE	502.89	-399.87	-543.91
91	91	352	LIVE	593.06	-100.98	341.58
91	91	271	LIVE	1844.07	274.9	-300.99
91	91	270	LIVE	1754.32	-23.42	-1186.59
91	91	383	SX	4045.3	2065.84	3203.6
91	91	352	SX	4369.59	769.37	5069.35
91	91	271	SX	11154.53	2834.49	2055.89
91	91	270	SX	11497.6	4711.29	6690.23
91	91	383	SY	17670.97	3583.49	10205.87
91	91	352	SY	18693.29	1512.23	5426.41
91	91	271	SY	9965.9	2120.13	2739.53
91	91	270	SY	9188.5	6089.19	11534.19
91	91	383	WB	5.43	-65.97	-55.98
91	91	352	WB	20.11	-17.07	-19.15
91	91	271	WB	164.04	26.12	-33.75
91	91	270	WB	149.37	-22.77	-70.58
92	92	352	DEAD	-28.83	8.23	171.07
92	92	338	DEAD	-20.31	36.62	42.08
92	92	272	DEAD	99.23	72.48	-261.02
92	92	271	DEAD	90.72	44.1	-132.03
92	92	352	LIVE	1304.18	112.77	-82.76
92	92	338	LIVE	1258.46	-39.62	-239.7
92	92	272	LIVE	2163.48	231.88	-531.25
92	92	271	LIVE	2209.19	384.28	-374.3
92	92	352	SX	8046.83	1102.78	1057.09
92	92	338	SX	7998.47	1157.75	2397.98
92	92	272	SX	8505.97	1731.74	4382.11
92	92	271	SX	8713.91	2383.18	2222.41
92	92	352	SY	24596.5	3028.57	2504.46
92	92	338	SY	24626.9	3162.04	1039.39
92	92	272	SY	6329.7	3134.31	5629.62
92	92	271	SY	6411.91	3397.23	3918.72
92	92	352	WB	105.29	8.49	-24.54
92	92	338	WB	100.27	-8.26	-23.24
92	92	272	WB	177.53	14.92	-34.81
92	92	271	WB	182.55	31.67	-36.11
93	93	338	DEAD	227.22	110.88	-193.1
93	93	342	DEAD	210.62	55.55	-375.38
93	93	273	DEAD	356.68	99.37	-240.58
93	93	272	DEAD	373.28	154.7	-58.3
93	93	338	LIVE	2249.94	257.82	-261.17
93	93	342	LIVE	2219.85	157.53	-498.68
93	93	273	LIVE	2626.64	279.56	-689.46
93	93	272	LIVE	2656.73	379.86	-451.95
93	93	338	SX	9962.13	1479.72	3288.41
93	93	342	SX	9649.	1812.08	3300.15
93	93	273	SX	13259.16	1019.49	5216.69
93	93	272	SX	13883.13	3277.24	5214.08
93	93	338	SY	16442.31	1136.66	6639.94
93	93	342	SY	17809.48	5383.89	6794.1
93	93	273	SY	5333.64	844.4	3899.85

Table 32: Element Stresses - Area Shells, Part 2 of 3

Area	AreaElem	Joint	OutputCase	S11Bot	S22Bot	S12Bot
				Kgf/m2	Kgf/m2	Kgf/m2
93	93	272	SY	5709.94	4899.23	3745.27
93	93	338	WB	187.41	17.89	-13.38
93	93	342	WB	185.04	9.98	-24.77
93	93	273	WB	201.44	14.9	-51.16
93	93	272	WB	203.81	22.81	-39.77
94	94	342	DEAD	1582.58	467.14	-520.28
94	94	344	DEAD	1566.07	412.1	-460.47
94	94	274	DEAD	126.16	-19.88	-574.97
94	94	273	DEAD	142.67	35.17	-634.78
94	94	342	LIVE	4285.5	777.22	-1024.34
94	94	344	LIVE	4235.38	610.14	-675.28
94	94	274	LIVE	2623.22	126.49	-559.79
94	94	273	LIVE	2673.34	293.57	-908.84
94	94	342	SX	16104.02	1827.39	2401.97
94	94	344	SX	14947.35	2183.28	2921.5
94	94	274	SX	16313.54	1679.94	5747.05
94	94	273	SX	17483.95	2243.99	5035.75
94	94	342	SY	5399.85	653.7	1209.04
94	94	344	SY	5115.97	1390.32	4173.95
94	94	274	SY	6063.54	548.86	11055.18
94	94	273	SY	6489.27	1074.42	7951.56
94	94	342	WB	290.31	41.56	-65.74
94	94	344	WB	288.22	34.58	-31.77
94	94	274	WB	219.06	13.83	-10.29
94	94	273	WB	221.16	20.81	-44.26
98	98	183	DEAD	-3463.92	-689.2	4118.4
98	98	160	DEAD	-4758.38	-5004.09	4844.97
98	98	264	DEAD	-2522.1	-4385.88	4494.85
98	98	182	DEAD	-1208.78	-8.14	3723.8
98	98	183	LIVE	-4321.22	-1685.54	5725.06
98	98	160	LIVE	-5287.78	-4907.4	6655.14
98	98	264	LIVE	706.95	-3279.33	5921.15
98	98	182	LIVE	1714.28	78.42	4877.66
98	98	183	SX	8457.3	3801.48	7385.22
98	98	160	SX	7744.18	2502.82	7077.16
98	98	264	SX	9810.77	3720.31	4555.39
98	98	182	SX	9231.69	1173.75	4656.28
98	98	183	SY	3723.75	1695.46	10420.41
98	98	160	SY	4855.03	10168.84	7970.48
98	98	264	SY	7175.1	10851.9	5888.97
98	98	182	SY	5075.69	503.49	8069.86
98	98	183	WB	-208.72	-128.56	256.78
98	98	160	WB	-202.78	-108.77	298.79
98	98	264	WB	281.91	22.	246.67
98	98	182	WB	278.93	12.05	195.67
99	99	181	DEAD	6158.4	2374.06	3257.94
99	99	182	DEAD	-1141.74	-154.68	3952.75
99	99	264	DEAD	-2694.85	-5369.99	-751.81
99	99	386	DEAD	4601.5	-2941.83	-1289.07
99	99	181	LIVE	7114.74	2346.77	4427.05
99	99	182	LIVE	1986.18	378.91	4836.04
99	99	264	LIVE	126.55	-5868.09	-1522.43
99	99	386	LIVE	5275.66	-3951.69	-1812.56
99	99	181	SX	7759.52	4312.18	6119.29

Table 32: Element Stresses - Area Shells, Part 2 of 3

Area	AreaElem	Joint	OutputCase	S11Bot Kgf/m2	S22Bot Kgf/m2	S12Bot Kgf/m2
99	99	182	SX	9243.92	761.9	3873.24
99	99	264	SX	10685.17	5966.9	1618.94
99	99	386	SX	6366.79	934.17	1875.89
99	99	181	SY	7641.42	2410.55	11736.37
99	99	182	SY	5577.48	1204.08	8533.76
99	99	264	SY	5144.56	2989.19	2623.91
99	99	386	SY	7490.69	3590.67	1681.61
99	99	181	WB	222.47	43.7	169.81
99	99	182	WB	300.55	50.95	165.08
99	99	264	WB	232.37	-178.14	-91.77
99	99	386	WB	156.16	-184.07	-87.86
100	100	344	DEAD	3284.04	1460.41	-125.25
100	100	387	DEAD	2158.77	-2316.65	-288.31
100	100	275	DEAD	-449.97	-3868.89	-65.33
100	100	274	DEAD	685.36	-64.19	-121.6
100	100	344	LIVE	5346.54	1176.23	890.96
100	100	387	LIVE	3470.39	-5090.05	747.07
100	100	275	LIVE	2890.27	-4991.14	-413.32
100	100	274	LIVE	4550.65	553.84	-345.85
100	100	344	SX	17637.68	4094.7	6389.37
100	100	387	SX	21366.77	11122.14	3870.4
100	100	275	SX	27659.42	16272.89	1966.87
100	100	274	SX	23283.37	1633.88	6540.22
100	100	344	SY	27838.19	11364.6	17640.37
100	100	387	SY	28583.87	13300.61	12171.63
100	100	275	SY	9798.89	7139.75	2044.82
100	100	274	SY	8196.7	1309.96	9414.31
100	100	344	WB	263.98	7.92	110.29
100	100	387	WB	147.19	-380.43	100.78
100	100	275	WB	287.06	-246.26	-39.33
100	100	274	WB	380.16	63.5	-20.86

11. Material take-off

This section provides a material take-off.

Table 33: Material List 2 - By Section Property

Table 33: Material List 2 - By Section Property

Section	ObjectType	NumPieces	TotalLength m	TotalWeight Kgf
IPE360	Frame	272	315.57047	18007.26
IPE300	Frame	57	68.60743	2897.15
IPE240	Frame	463	501.17058	15380.82
IPE400	Frame	31	33.31951	2209.9
VIGA (0.50X1.20)	Frame	5	5.48798	7911.81
COLUMNA D-0.50	Frame	2	9.4	4434.76
COLUMNA D-0.40	Frame	1	4.7	1419.12
W12x106	Frame	70	299.	47240.03
ENTABLADO	Area			30345.41

12. Design preferences

This section provides the design preferences for each type of design, which typically include material reduction factors, framing type, stress ratio limit, deflection limits, and other code specific items.

12.1. Steel design

Table 34: Preferences - Steel Design - AISC 360-10, Part 1 of 4

Table 34: Preferences - Steel Design - AISC 360-10, Part 1 of 4

THDesign	FrameType	PatLLF	SRatioLimit	MaxIter	SDC	SeisCode	SeisLoad	ImpFactor
Envelopes	SMF	0.75	0.95	1	E	Yes	Yes	1.

Table 34: Preferences - Steel Design - AISC 360-10, Part 2 of 4

Table 34: Preferences - Steel Design - AISC 360-10, Part 2 of 4

SystemRho	SystemSds	SystemR	SystemCd	Omega0	Provision	AMethod	SOMethod	SRMethod
1.	0.5	8.	5.5	3.	LRFD	Direct Analysis	General 2nd Order	Tau-b Fixed

Table 34: Preferences - Steel Design - AISC 360-10, Part 3 of 4

Table 34: Preferences - Steel Design - AISC 360-10, Part 3 of 4

NLCoeff	PhiB	PhiC	PhiTY	PhiTF	PhiV	PhiVRolledI	PhiVT	PlugWeld
0.002	0.9	0.9	0.9	0.75	0.9	1.	0.9	Yes

Table 34: Preferences - Steel Design - AISC 360-10, Part 4 of 4

Table 34: Preferences - Steel Design - AISC 360-10, Part 4 of 4

HSSWelding	HSSReduceT	CheckDefl	DLRat	SDLAndLLRat	LLRat	TotalRat	NetRat
ERW	No	No	120.	120.	360.	240.	240.

12.2. Concrete design

Table 35: Preferences - Concrete Design - ACI 318-14, Part 1 of 2

Table 35: Preferences - Concrete Design - ACI 318-14, Part 1 of 2

THDesign	NumCurves	NumPoints	MinEccen	PatLLF	UFLimit	SeisCat	Rho	Sds
Envelopes	24	11	Yes	0.75	0.95	D	1.	0.5

Table 35: Preferences - Concrete Design - ACI 318-14, Part 2 of 2

Table 35: Preferences - Concrete Design - ACI 318-14, Part 2 of 2

PhiT	PhiCTied	PhiCSpiral	PhiV	PhiVSeismic	PhiVJoint
0.9	0.65	0.75	0.75	0.6	0.85

13. Design overwrites

This section provides the design overwrites for each type of design, which are assigned to individual members of the structure.

13.1. Steel design

Table 38: Overwrites - Steel Design - AISC 360-10, Part 1 of 7

Table 38: Overwrites - Steel Design - AISC 360-10, Part 1 of 7

Frame	DesignSect	FrameType	Fy	RLLF	AreaRatio	XLMajor
			Kgf/m2			
1	Program Determined	Program Determined	0.	0.	0.	0.
2	Program Determined	Program Determined	0.	0.	0.	0.
3	Program Determined	Program Determined	0.	0.	0.	0.
4	Program Determined	Program Determined	0.	0.	0.	0.
5	Program Determined	Program Determined	0.	0.	0.	0.
6	Program Determined	Program Determined	0.	0.	0.	0.
7	Program Determined	Program Determined	0.	0.	0.	0.
8	Program Determined	Program Determined	0.	0.	0.	0.
9	Program Determined	Program Determined	0.	0.	0.	0.
10	Program Determined	Program Determined	0.	0.	0.	0.
11	Program Determined	Program Determined	0.	0.	0.	0.
12	Program Determined	Program Determined	0.	0.	0.	0.
13	Program Determined	Program Determined	0.	0.	0.	0.
14	Program Determined	Program Determined	0.	0.	0.	0.
15	Program Determined	Program Determined	0.	0.	0.	0.
16	Program Determined	Program Determined	0.	0.	0.	0.
17	Program Determined	Program Determined	0.	0.	0.	0.
18	Program Determined	Program Determined	0.	0.	0.	0.
19	Program Determined	Program Determined	0.	0.	0.	0.
20	Program Determined	Program Determined	0.	0.	0.	0.
21	Program Determined	Program Determined	0.	0.	0.	0.
22	Program Determined	Program Determined	0.	0.	0.	0.
37	Program Determined	Program Determined	0.	0.	0.	0.
38	Program Determined	Program Determined	0.	0.	0.	0.
40	Program Determined	Program Determined	0.	0.	0.	0.
41	Program Determined	Program Determined	0.	0.	0.	0.
42	Program Determined	Program Determined	0.	0.	0.	0.
43	Program Determined	Program Determined	0.	0.	0.	0.
44	Program Determined	Program Determined	0.	0.	0.	0.
45	Program Determined	Program Determined	0.	0.	0.	0.
46	Program Determined	Program Determined	0.	0.	0.	0.
47	Program Determined	Program Determined	0.	0.	0.	0.
48	Program Determined	Program Determined	0.	0.	0.	0.
49	Program Determined	Program Determined	0.	0.	0.	0.
50	Program Determined	Program Determined	0.	0.	0.	0.

Table 38: Overwrites - Steel Design - AISC 360-10, Part 2 of 7

Table 38: Overwrites - Steel Design - AISC 360-10, Part 2 of 7

Frame	XLMinor	XLLTB	K1Major	K1Minor	K2Major	K2Minor	KLTB
1	0.	0.	0.	0.	0.	0.	0.
2	0.	0.	0.	0.	0.	0.	0.
3	0.	0.	0.	0.	0.	0.	0.
4	0.	0.	0.	0.	0.	0.	0.
5	0.	0.	0.	0.	0.	0.	0.
6	0.	0.	0.	0.	0.	0.	0.
7	0.	0.	0.	0.	0.	0.	0.
8	0.	0.	0.	0.	0.	0.	0.
9	0.	0.	0.	0.	0.	0.	0.
10	0.	0.	0.	0.	0.	0.	0.
11	0.	0.	0.	0.	0.	0.	0.
12	0.	0.	0.	0.	0.	0.	0.
13	0.	0.	0.	0.	0.	0.	0.
14	0.	0.	0.	0.	0.	0.	0.
15	0.	0.	0.	0.	0.	0.	0.
16	0.	0.	0.	0.	0.	0.	0.
17	0.	0.	0.	0.	0.	0.	0.
18	0.	0.	0.	0.	0.	0.	0.
19	0.	0.	0.	0.	0.	0.	0.
20	0.	0.	0.	0.	0.	0.	0.
21	0.	0.	0.	0.	0.	0.	0.
22	0.	0.	0.	0.	0.	0.	0.
37	0.	0.	0.	0.	0.	0.	0.
38	0.	0.	0.	0.	0.	0.	0.
40	0.	0.	0.	0.	0.	0.	0.
41	0.	0.	0.	0.	0.	0.	0.
42	0.	0.	0.	0.	0.	0.	0.
43	0.	0.	0.	0.	0.	0.	0.
44	0.	0.	0.	0.	0.	0.	0.
45	0.	0.	0.	0.	0.	0.	0.
46	0.	0.	0.	0.	0.	0.	0.
47	0.	0.	0.	0.	0.	0.	0.
48	0.	0.	0.	0.	0.	0.	0.
49	0.	0.	0.	0.	0.	0.	0.
50	0.	0.	0.	0.	0.	0.	0.
51	0.	0.	0.	0.	0.	0.	0.
52	0.	0.	0.	0.	0.	0.	0.
53	0.	0.	0.	0.	0.	0.	0.
54	0.	0.	0.	0.	0.	0.	0.
55	0.	0.	0.	0.	0.	0.	0.
56	0.	0.	0.	0.	0.	0.	0.
57	0.	0.	0.	0.	0.	0.	0.
58	0.	0.	0.	0.	0.	0.	0.
59	0.	0.	0.	0.	0.	0.	0.
60	0.	0.	0.	0.	0.	0.	0.
61	0.	0.	0.	0.	0.	0.	0.
62	0.	0.	0.	0.	0.	0.	0.
63	0.	0.	0.	0.	0.	0.	0.
110	0.	0.	0.	0.	0.	0.	0.
111	0.	0.	0.	0.	0.	0.	0.
112	0.	0.	0.	0.	0.	0.	0.
113	0.	0.	0.	0.	0.	0.	0.
114	0.	0.	0.	0.	0.	0.	0.

Table 38: Overwrites - Steel Design - AISC 360-10, Part 3 of 7

Table 38: Overwrites - Steel Design - AISC 360-10, Part 3 of 7

Frame	CmMajor	CmMinor	Cb	B1Major	B1Minor	B2Major	B2Minor
1	0.	0.	0.	0.	0.	0.	0.
2	0.	0.	0.	0.	0.	0.	0.
3	0.	0.	0.	0.	0.	0.	0.
4	0.	0.	0.	0.	0.	0.	0.
5	0.	0.	0.	0.	0.	0.	0.
6	0.	0.	0.	0.	0.	0.	0.
7	0.	0.	0.	0.	0.	0.	0.
8	0.	0.	0.	0.	0.	0.	0.
9	0.	0.	0.	0.	0.	0.	0.
10	0.	0.	0.	0.	0.	0.	0.
11	0.	0.	0.	0.	0.	0.	0.
12	0.	0.	0.	0.	0.	0.	0.
13	0.	0.	0.	0.	0.	0.	0.
14	0.	0.	0.	0.	0.	0.	0.
15	0.	0.	0.	0.	0.	0.	0.
16	0.	0.	0.	0.	0.	0.	0.
17	0.	0.	0.	0.	0.	0.	0.
18	0.	0.	0.	0.	0.	0.	0.
19	0.	0.	0.	0.	0.	0.	0.
20	0.	0.	0.	0.	0.	0.	0.
21	0.	0.	0.	0.	0.	0.	0.
22	0.	0.	0.	0.	0.	0.	0.
37	0.	0.	0.	0.	0.	0.	0.
38	0.	0.	0.	0.	0.	0.	0.
40	0.	0.	0.	0.	0.	0.	0.
41	0.	0.	0.	0.	0.	0.	0.
42	0.	0.	0.	0.	0.	0.	0.
43	0.	0.	0.	0.	0.	0.	0.
44	0.	0.	0.	0.	0.	0.	0.
45	0.	0.	0.	0.	0.	0.	0.
46	0.	0.	0.	0.	0.	0.	0.
47	0.	0.	0.	0.	0.	0.	0.
48	0.	0.	0.	0.	0.	0.	0.
49	0.	0.	0.	0.	0.	0.	0.
50	0.	0.	0.	0.	0.	0.	0.
51	0.	0.	0.	0.	0.	0.	0.
52	0.	0.	0.	0.	0.	0.	0.
53	0.	0.	0.	0.	0.	0.	0.
54	0.	0.	0.	0.	0.	0.	0.
55	0.	0.	0.	0.	0.	0.	0.
56	0.	0.	0.	0.	0.	0.	0.
57	0.	0.	0.	0.	0.	0.	0.
58	0.	0.	0.	0.	0.	0.	0.
59	0.	0.	0.	0.	0.	0.	0.
60	0.	0.	0.	0.	0.	0.	0.
61	0.	0.	0.	0.	0.	0.	0.
62	0.	0.	0.	0.	0.	0.	0.
63	0.	0.	0.	0.	0.	0.	0.
110	0.	0.	0.	0.	0.	0.	0.
111	0.	0.	0.	0.	0.	0.	0.
112	0.	0.	0.	0.	0.	0.	0.

Table 38: Overwrites - Steel Design - AISC 360-10, Part 4 of 7

Table 38: Overwrites - Steel Design - AISC 360-10, Part 4 of 7

Frame	HSSReduceT	HSSWelding	Omega0	Ry	Pnc	Pnt	Mn3
					Kgf	Kgf	Kgf-m
1	Program Determined	Program Determined	0.	0.	0.	0.	0.
2	Program Determined	Program Determined	0.	0.	0.	0.	0.
3	Program Determined	Program Determined	0.	0.	0.	0.	0.
4	Program Determined	Program Determined	0.	0.	0.	0.	0.
5	Program Determined	Program Determined	0.	0.	0.	0.	0.
6	Program Determined	Program Determined	0.	0.	0.	0.	0.
7	Program Determined	Program Determined	0.	0.	0.	0.	0.
8	Program Determined	Program Determined	0.	0.	0.	0.	0.
9	Program Determined	Program Determined	0.	0.	0.	0.	0.
10	Program Determined	Program Determined	0.	0.	0.	0.	0.
11	Program Determined	Program Determined	0.	0.	0.	0.	0.
12	Program Determined	Program Determined	0.	0.	0.	0.	0.
13	Program Determined	Program Determined	0.	0.	0.	0.	0.
14	Program Determined	Program Determined	0.	0.	0.	0.	0.
15	Program Determined	Program Determined	0.	0.	0.	0.	0.
16	Program Determined	Program Determined	0.	0.	0.	0.	0.
17	Program Determined	Program Determined	0.	0.	0.	0.	0.
18	Program Determined	Program Determined	0.	0.	0.	0.	0.
19	Program Determined	Program Determined	0.	0.	0.	0.	0.
20	Program Determined	Program Determined	0.	0.	0.	0.	0.
21	Program Determined	Program Determined	0.	0.	0.	0.	0.
22	Program Determined	Program Determined	0.	0.	0.	0.	0.
37	Program Determined	Program Determined	0.	0.	0.	0.	0.
38	Program Determined	Program Determined	0.	0.	0.	0.	0.
40	Program Determined	Program Determined	0.	0.	0.	0.	0.
41	Program Determined	Program Determined	0.	0.	0.	0.	0.
42	Program Determined	Program Determined	0.	0.	0.	0.	0.

Table 38: Overwrites - Steel Design - AISC 360-10, Part 4 of 7

Frame	HSSReduceT	HSSWelding	Omega0	Ry	Pnc	Pnt	Mn3
					Kgf	Kgf	Kgf-m
43	Program Determined	Program Determined	0.	0.	0.	0.	0.
44	Program Determined	Program Determined	0.	0.	0.	0.	0.
45	Program Determined	Program Determined	0.	0.	0.	0.	0.
46	Program Determined	Program Determined	0.	0.	0.	0.	0.
47	Program Determined	Program Determined	0.	0.	0.	0.	0.
48	Program Determined	Program Determined	0.	0.	0.	0.	0.
49	Program Determined	Program Determined	0.	0.	0.	0.	0.
50	Program Determined	Program Determined	0.	0.	0.	0.	0.
51	Program Determined	Program Determined	0.	0.	0.	0.	0.
52	Program Determined	Program Determined	0.	0.	0.	0.	0.
53	Program Determined	Program Determined	0.	0.	0.	0.	0.
54	Program Determined	Program Determined	0.	0.	0.	0.	0.
55	Program Determined	Program Determined	0.	0.	0.	0.	0.
56	Program Determined	Program Determined	0.	0.	0.	0.	0.
57	Program Determined	Program Determined	0.	0.	0.	0.	0.
58	Program Determined	Program Determined	0.	0.	0.	0.	0.
59	Program Determined	Program Determined	0.	0.	0.	0.	0.
60	Program Determined	Program Determined	0.	0.	0.	0.	0.
61	Program Determined	Program Determined	0.	0.	0.	0.	0.
62	Program Determined	Program Determined	0.	0.	0.	0.	0.
63	Program Determined	Program Determined	0.	0.	0.	0.	0.
110	Program Determined	Program Determined	0.	0.	0.	0.	0.
111	Program Determined	Program Determined	0.	0.	0.	0.	0.
112	Program Determined	Program Determined	0.	0.	0.	0.	0.
113	Program Determined	Program Determined	0.	0.	0.	0.	0.
114	Program Determined	Program Determined	0.	0.	0.	0.	0.
115	Program Determined	Program Determined	0.	0.	0.	0.	0.
116	Program Determined	Program Determined	0.	0.	0.	0.	0.
117	Program Determined	Program Determined	0.	0.	0.	0.	0.

Table 38: Overwrites - Steel Design - AISC 360-10, Part 5 of 7

Table 38: Overwrites - Steel Design - AISC 360-10, Part 5 of 7

Frame	Mn2	Vn2	Vn3	CheckDefl	DeflType	DLRat	SDLAndLLRat
	Kgf-m	Kgf	Kgf				
1	0.	0.	0.	Program Determined	Program Determined	0.	0.
2	0.	0.	0.	Program Determined	Program Determined	0.	0.
3	0.	0.	0.	Program Determined	Program Determined	0.	0.
4	0.	0.	0.	Program Determined	Program Determined	0.	0.
5	0.	0.	0.	Program Determined	Program Determined	0.	0.
6	0.	0.	0.	Program Determined	Program Determined	0.	0.
7	0.	0.	0.	Program Determined	Program Determined	0.	0.
8	0.	0.	0.	Program Determined	Program Determined	0.	0.
9	0.	0.	0.	Program Determined	Program Determined	0.	0.
10	0.	0.	0.	Program Determined	Program Determined	0.	0.
11	0.	0.	0.	Program Determined	Program Determined	0.	0.
12	0.	0.	0.	Program Determined	Program Determined	0.	0.
13	0.	0.	0.	Program Determined	Program Determined	0.	0.
14	0.	0.	0.	Program Determined	Program Determined	0.	0.
15	0.	0.	0.	Program Determined	Program Determined	0.	0.
16	0.	0.	0.	Program Determined	Program Determined	0.	0.
17	0.	0.	0.	Program Determined	Program Determined	0.	0.
18	0.	0.	0.	Program Determined	Program Determined	0.	0.
19	0.	0.	0.	Program Determined	Program Determined	0.	0.
20	0.	0.	0.	Program Determined	Program Determined	0.	0.
21	0.	0.	0.	Program Determined	Program Determined	0.	0.
22	0.	0.	0.	Program Determined	Program Determined	0.	0.
37	0.	0.	0.	Program Determined	Program Determined	0.	0.
38	0.	0.	0.	Program Determined	Program Determined	0.	0.
40	0.	0.	0.	Program Determined	Program Determined	0.	0.
41	0.	0.	0.	Program Determined	Program Determined	0.	0.
42	0.	0.	0.	Program Determined	Program Determined	0.	0.
43	0.	0.	0.	Program Determined	Program Determined	0.	0.

Table 38: Overwrites - Steel Design - AISC 360-10, Part 5 of 7

Frame	Mn2	Vn2	Vn3	CheckDefl	DeflType	DLRat	SDLAndLLRat
	Kgf-m	Kgf	Kgf				
44	0.	0.	0.	Program Determined	Program Determined	0.	0.
45	0.	0.	0.	Program Determined	Program Determined	0.	0.
46	0.	0.	0.	Program Determined	Program Determined	0.	0.
47	0.	0.	0.	Program Determined	Program Determined	0.	0.
48	0.	0.	0.	Program Determined	Program Determined	0.	0.
49	0.	0.	0.	Program Determined	Program Determined	0.	0.
50	0.	0.	0.	Program Determined	Program Determined	0.	0.
51	0.	0.	0.	Program Determined	Program Determined	0.	0.
52	0.	0.	0.	Program Determined	Program Determined	0.	0.
53	0.	0.	0.	Program Determined	Program Determined	0.	0.
54	0.	0.	0.	Program Determined	Program Determined	0.	0.
55	0.	0.	0.	Program Determined	Program Determined	0.	0.
56	0.	0.	0.	Program Determined	Program Determined	0.	0.
57	0.	0.	0.	Program Determined	Program Determined	0.	0.
58	0.	0.	0.	Program Determined	Program Determined	0.	0.
59	0.	0.	0.	Program Determined	Program Determined	0.	0.
60	0.	0.	0.	Program Determined	Program Determined	0.	0.
61	0.	0.	0.	Program Determined	Program Determined	0.	0.
62	0.	0.	0.	Program Determined	Program Determined	0.	0.
63	0.	0.	0.	Program Determined	Program Determined	0.	0.
110	0.	0.	0.	Program Determined	Program Determined	0.	0.
111	0.	0.	0.	Program Determined	Program Determined	0.	0.
112	0.	0.	0.	Program Determined	Program Determined	0.	0.
113	0.	0.	0.	Program Determined	Program Determined	0.	0.
114	0.	0.	0.	Program Determined	Program Determined	0.	0.
115	0.	0.	0.	Program Determined	Program Determined	0.	0.
116	0.	0.	0.	Program Determined	Program Determined	0.	0.
117	0.	0.	0.	Program Determined	Program Determined	0.	0.
118	0.	0.	0.	Program Determined	Program Determined	0.	0.

Table 38: Overwrites - Steel Design - AISC 360-10, Part 6 of 7

Table 38: Overwrites - Steel Design - AISC 360-10, Part 6 of 7

Frame	LLRat	TotalRat	NetRat	DLAbs	SDLAndLLAbs	LLAbs	TotalAbs
				m	m	m	m
1	0.	0.	0.	0.	0.	0.	0.
2	0.	0.	0.	0.	0.	0.	0.
3	0.	0.	0.	0.	0.	0.	0.
4	0.	0.	0.	0.	0.	0.	0.
5	0.	0.	0.	0.	0.	0.	0.
6	0.	0.	0.	0.	0.	0.	0.
7	0.	0.	0.	0.	0.	0.	0.
8	0.	0.	0.	0.	0.	0.	0.
9	0.	0.	0.	0.	0.	0.	0.
10	0.	0.	0.	0.	0.	0.	0.
11	0.	0.	0.	0.	0.	0.	0.
12	0.	0.	0.	0.	0.	0.	0.
13	0.	0.	0.	0.	0.	0.	0.
14	0.	0.	0.	0.	0.	0.	0.
15	0.	0.	0.	0.	0.	0.	0.
16	0.	0.	0.	0.	0.	0.	0.
17	0.	0.	0.	0.	0.	0.	0.
18	0.	0.	0.	0.	0.	0.	0.
19	0.	0.	0.	0.	0.	0.	0.
20	0.	0.	0.	0.	0.	0.	0.
21	0.	0.	0.	0.	0.	0.	0.
22	0.	0.	0.	0.	0.	0.	0.
37	0.	0.	0.	0.	0.	0.	0.
38	0.	0.	0.	0.	0.	0.	0.
40	0.	0.	0.	0.	0.	0.	0.
41	0.	0.	0.	0.	0.	0.	0.
42	0.	0.	0.	0.	0.	0.	0.
43	0.	0.	0.	0.	0.	0.	0.
44	0.	0.	0.	0.	0.	0.	0.
45	0.	0.	0.	0.	0.	0.	0.
46	0.	0.	0.	0.	0.	0.	0.
47	0.	0.	0.	0.	0.	0.	0.
48	0.	0.	0.	0.	0.	0.	0.
49	0.	0.	0.	0.	0.	0.	0.
50	0.	0.	0.	0.	0.	0.	0.
51	0.	0.	0.	0.	0.	0.	0.
52	0.	0.	0.	0.	0.	0.	0.
53	0.	0.	0.	0.	0.	0.	0.
54	0.	0.	0.	0.	0.	0.	0.
55	0.	0.	0.	0.	0.	0.	0.
56	0.	0.	0.	0.	0.	0.	0.
57	0.	0.	0.	0.	0.	0.	0.
58	0.	0.	0.	0.	0.	0.	0.
59	0.	0.	0.	0.	0.	0.	0.
60	0.	0.	0.	0.	0.	0.	0.
61	0.	0.	0.	0.	0.	0.	0.
62	0.	0.	0.	0.	0.	0.	0.
63	0.	0.	0.	0.	0.	0.	0.
110	0.	0.	0.	0.	0.	0.	0.
111	0.	0.	0.	0.	0.	0.	0.
112	0.	0.	0.	0.	0.	0.	0.

Table 38: Overwrites - Steel Design - AISC 360-10, Part 7 of 7

Table 38: Overwrites - Steel Design - AISC 360-10, Part 7 of 7

Frame	NetAbs	SpecCamber	DCLimit
	m	m	
1	0.	0.	0.
2	0.	0.	0.
3	0.	0.	0.
4	0.	0.	0.
5	0.	0.	0.
6	0.	0.	0.
7	0.	0.	0.
8	0.	0.	0.
9	0.	0.	0.
10	0.	0.	0.
11	0.	0.	0.
12	0.	0.	0.
13	0.	0.	0.
14	0.	0.	0.
15	0.	0.	0.
16	0.	0.	0.
17	0.	0.	0.
18	0.	0.	0.
19	0.	0.	0.
20	0.	0.	0.
21	0.	0.	0.
22	0.	0.	0.
37	0.	0.	0.
38	0.	0.	0.
40	0.	0.	0.
41	0.	0.	0.
42	0.	0.	0.
43	0.	0.	0.
44	0.	0.	0.
45	0.	0.	0.
46	0.	0.	0.
47	0.	0.	0.
48	0.	0.	0.
49	0.	0.	0.
50	0.	0.	0.
51	0.	0.	0.
52	0.	0.	0.
53	0.	0.	0.
54	0.	0.	0.
55	0.	0.	0.
56	0.	0.	0.
57	0.	0.	0.
58	0.	0.	0.
59	0.	0.	0.
60	0.	0.	0.
61	0.	0.	0.
62	0.	0.	0.
63	0.	0.	0.
110	0.	0.	0.
111	0.	0.	0.

Table 38: Overwrites - Steel Design - AISC 360-10, Part 7 of 7

Frame	NetAbs	SpecCamber	DCLimit
	m	m	
265	0.	0.	0.
266	0.	0.	0.
267	0.	0.	0.
268	0.	0.	0.
269	0.	0.	0.
270	0.	0.	0.
271	0.	0.	0.
272	0.	0.	0.
273	0.	0.	0.
274	0.	0.	0.
275	0.	0.	0.
276	0.	0.	0.
277	0.	0.	0.
278	0.	0.	0.
279	0.	0.	0.
280	0.	0.	0.
281	0.	0.	0.
282	0.	0.	0.
283	0.	0.	0.
284	0.	0.	0.
285	0.	0.	0.
286	0.	0.	0.
287	0.	0.	0.
288	0.	0.	0.
289	0.	0.	0.
290	0.	0.	0.
291	0.	0.	0.
292	0.	0.	0.
293	0.	0.	0.
294	0.	0.	0.
295	0.	0.	0.
296	0.	0.	0.
297	0.	0.	0.
298	0.	0.	0.
299	0.	0.	0.
300	0.	0.	0.
301	0.	0.	0.
302	0.	0.	0.
303	0.	0.	0.
304	0.	0.	0.
305	0.	0.	0.
306	0.	0.	0.
307	0.	0.	0.
308	0.	0.	0.
309	0.	0.	0.
310	0.	0.	0.
311	0.	0.	0.
312	0.	0.	0.
313	0.	0.	0.
314	0.	0.	0.
315	0.	0.	0.
316	0.	0.	0.
317	0.	0.	0.

Table 38: Overwrites - Steel Design - AISC 360-10, Part 7 of 7

Frame	NetAbs	SpecCamber	DCLimit
	m	m	
318	0.	0.	0.
319	0.	0.	0.
320	0.	0.	0.
321	0.	0.	0.
322	0.	0.	0.
323	0.	0.	0.
324	0.	0.	0.
325	0.	0.	0.
326	0.	0.	0.
327	0.	0.	0.
328	0.	0.	0.
329	0.	0.	0.
330	0.	0.	0.
331	0.	0.	0.
332	0.	0.	0.
333	0.	0.	0.
334	0.	0.	0.
335	0.	0.	0.
336	0.	0.	0.
337	0.	0.	0.
338	0.	0.	0.
339	0.	0.	0.
340	0.	0.	0.
341	0.	0.	0.
342	0.	0.	0.
343	0.	0.	0.
344	0.	0.	0.
345	0.	0.	0.
346	0.	0.	0.
347	0.	0.	0.
348	0.	0.	0.
349	0.	0.	0.
350	0.	0.	0.
351	0.	0.	0.
352	0.	0.	0.
353	0.	0.	0.
354	0.	0.	0.
355	0.	0.	0.
356	0.	0.	0.
357	0.	0.	0.
358	0.	0.	0.
359	0.	0.	0.
360	0.	0.	0.
361	0.	0.	0.
362	0.	0.	0.
363	0.	0.	0.
364	0.	0.	0.
365	0.	0.	0.
366	0.	0.	0.
367	0.	0.	0.
368	0.	0.	0.
369	0.	0.	0.
370	0.	0.	0.

14. Design summary

This section provides the design summary for each type of design, which highlights the controlling demand/capacity ratio and it's associated combination and location in each member.

14.1. Steel design

Table 39: Steel Design 1 - Summary Data - AISC 360-10, Part 1 of 2

Table 39: Steel Design 1 - Summary Data - AISC 360-10, Part 1 of 2

Frame	DesignSect	DesignType	Status	Ratio	RatioType
1	W12x106	Column	No Messages	0.50737	Minor CBC Ratio
2	W12x106	Column	No Messages	0.508156	Minor CBC Ratio
3	W12x106	Column	No Messages	0.508846	Minor CBC Ratio
4	W12x106	Column	No Messages	0.510679	Minor CBC Ratio
5	W12x106	Column	No Messages	0.516043	Minor CBC Ratio
6	W12x106	Column	No Messages	1.035524	Minor CBC Ratio
7	W12x106	Column	No Messages	1.022288	Minor CBC Ratio
8	W12x106	Column	No Messages	0.506162	Minor CBC Ratio
9	W12x106	Column	No Messages	0.507662	Minor CBC Ratio
10	W12x106	Column	No Messages	0.597254	Major CBC Ratio
11	W12x106	Column	No Messages	0.596971	Major CBC Ratio
12	W12x106	Column	No Messages	0.513333	Minor CBC Ratio
13	W12x106	Column	No Messages	0.514388	Minor CBC Ratio
14	W12x106	Column	No Messages	0.512493	Minor CBC Ratio
15	W12x106	Column	No Messages	0.512279	Minor CBC Ratio
16	W12x106	Column	No Messages	0.515624	Minor CBC Ratio
17	W12x106	Column	No Messages	0.509998	Minor CBC Ratio
18	W12x106	Column	No Messages	1.028452	Minor CBC Ratio
19	W12x106	Column	No Messages	1.018736	Minor CBC Ratio
20	W12x106	Column	No Messages	0.509585	Minor CBC Ratio
21	W12x106	Column	No Messages	1.033882	Minor CBC Ratio
22	W12x106	Column	No Messages	0.497017	Minor CBC Ratio
37	IPE360	Beam	No Messages	0.12096	PMM
38	IPE240	Beam	No Messages	0.030311	PMM
40	IPE240	Beam	No Messages	0.079746	PMM
41	IPE240	Beam	No Messages	0.098152	PMM
42	IPE240	Beam	No Messages	0.09827	PMM
43	IPE240	Beam	No Messages	0.083961	PMM
44	IPE240	Beam	No Messages	0.049046	PMM
45	IPE240	Beam	No Messages	0.102325	PMM
46	IPE240	Beam	No Messages	0.102161	PMM
47	IPE240	Beam	No Messages	0.05884	PMM
48	IPE240	Beam	No Messages	0.034476	PMM
49	IPE240	Beam	No Messages	0.034401	PMM
50	IPE240	Beam	No Messages	0.047856	PMM
51	IPE240	Beam	No Messages	0.047881	PMM
52	IPE240	Beam	No Messages	0.017024	PMM
53	IPE240	Beam	No Messages	0.045712	PMM
54	IPE240	Beam	No Messages	0.045825	PMM
55	IPE240	Beam	No Messages	0.022624	PMM
56	IPE240	Beam	No Messages	0.022628	PMM
57	IPE240	Beam	No Messages	0.10098	PMM
58	IPE240	Beam	No Messages	0.101017	PMM

Table 39: Steel Design 1 - Summary Data - AISC 360-10, Part 1 of 2

Frame	DesignSect	DesignType	Status	Ratio	RatioType
59	IPE240	Beam	No Messages	0.067347	PMM
60	IPE240	Beam	No Messages	0.095665	PMM
61	IPE240	Beam	No Messages	0.096217	PMM
62	IPE240	Beam	No Messages	0.096054	PMM
63	IPE240	Beam	No Messages	0.06549	PMM
110	IPE360	Beam	No Messages	0.129218	PMM
111	IPE360	Beam	No Messages	0.057809	PMM
112	IPE360	Beam	No Messages	0.058756	PMM
113	IPE360	Beam	No Messages	0.058679	PMM
114	IPE360	Beam	No Messages	0.075861	PMM
115	IPE360	Beam	No Messages	0.130361	PMM
116	IPE360	Beam	No Messages	0.102899	PMM
117	IPE360	Beam	No Messages	0.06009	PMM
118	IPE360	Beam	No Messages	0.030406	PMM
119	IPE360	Beam	No Messages	0.035148	PMM
120	IPE360	Beam	No Messages	0.089038	PMM
121	IPE360	Beam	No Messages	0.083447	PMM
122	IPE360	Beam	No Messages	0.028241	PMM
123	IPE360	Beam	No Messages	0.083581	PMM
124	IPE360	Beam	No Messages	0.0844	PMM
125	IPE360	Beam	No Messages	0.034195	PMM
126	IPE360	Beam	No Messages	0.029539	PMM
127	IPE360	Beam	No Messages	0.100012	PMM
128	IPE360	Beam	No Messages	0.13121	PMM
129	IPE360	Beam	No Messages	0.05351	PMM
130	IPE360	Beam	No Messages	0.063786	PMM
131	IPE360	Beam	No Messages	0.063853	PMM
132	IPE360	Beam	No Messages	0.064907	PMM
133	IPE360	Beam	No Messages	0.135093	PMM
134	IPE360	Beam	No Messages	0.127215	PMM
135	IPE360	Beam	No Messages	0.059593	PMM
136	IPE360	Beam	No Messages	0.06464	PMM
137	IPE360	Beam	No Messages	0.061411	PMM
138	IPE360	Beam	No Messages	0.053735	PMM
139	IPE360	Beam	No Messages	0.04948	Major Shear
140	IPE360	Beam	No Messages	0.074486	PMM
141	IPE360	Beam	No Messages	0.119434	PMM
142	IPE360	Beam	No Messages	0.128489	PMM
143	IPE360	Beam	No Messages	0.07265	PMM
144	IPE360	Beam	No Messages	0.051707	PMM
145	IPE360	Beam	No Messages	0.056578	PMM
146	IPE360	Beam	No Messages	0.057311	PMM
147	IPE360	Beam	No Messages	0.060311	Major Shear
148	IPE360	Beam	No Messages	0.135047	PMM
149	IPE360	Beam	No Messages	0.126337	PMM
150	IPE360	Beam	No Messages	0.051493	Major Shear
151	IPE360	Beam	No Messages	0.054589	PMM
152	IPE360	Beam	No Messages	0.060239	PMM
153	IPE360	Beam	No Messages	0.126419	PMM
154	IPE360	Beam	No Messages	0.089779	PMM
155	IPE360	Beam	No Messages	0.02671	PMM
156	IPE360	Beam	No Messages	0.034807	PMM
157	IPE360	Beam	No Messages	0.102905	PMM
158	IPE360	Beam	No Messages	0.166462	PMM

Table 39: Steel Design 1 - Summary Data - AISC 360-10, Part 1 of 2

Frame	DesignSect	DesignType	Status	Ratio	RatioType
159	IPE360	Beam	No Messages	0.072737	PMM
160	IPE360	Beam	No Messages	0.112553	PMM
161	IPE360	Beam	No Messages	0.112634	PMM
162	IPE360	Beam	No Messages	0.09001	PMM
163	IPE360	Beam	No Messages	0.214751	PMM
164	IPE360	Beam	No Messages	0.100729	PMM
165	IPE360	Beam	No Messages	0.042719	PMM
166	IPE360	Beam	No Messages	0.04375	PMM
167	IPE360	Beam	No Messages	0.097636	PMM
170	IPE360	Beam	No Messages	0.108904	PMM
171	IPE360	Beam	No Messages	0.045556	PMM
172	IPE360	Beam	No Messages	0.04941	PMM
173	IPE360	Beam	No Messages	0.044963	PMM
174	IPE360	Beam	No Messages	0.100908	PMM
183	IPE300	Beam	No Messages	0.043775	PMM
184	IPE300	Beam	No Messages	0.043848	PMM
185	IPE300	Beam	No Messages	0.018837	PMM
186	IPE300	Beam	No Messages	0.050945	PMM
187	IPE300	Beam	No Messages	0.050866	PMM
188	IPE300	Beam	No Messages	0.058992	PMM
189	IPE300	Beam	No Messages	0.124293	PMM
190	IPE300	Beam	No Messages	0.124387	PMM
191	IPE300	Beam	No Messages	0.134602	PMM
192	IPE300	Beam	No Messages	0.140888	PMM
193	IPE300	Beam	No Messages	0.140932	PMM
194	IPE300	Beam	No Messages	0.164617	PMM
195	IPE300	Beam	No Messages	0.224785	PMM
208	W12x106	Column	No Messages	0.503796	Minor CBC Ratio
209	W12x106	Column	No Messages	0.504075	Minor CBC Ratio
210	W12x106	Column	No Messages	0.503837	Minor CBC Ratio
211	W12x106	Column	No Messages	1.010104	Minor CBC Ratio
212	W12x106	Column	No Messages	0.502656	Minor CBC Ratio
213	W12x106	Column	No Messages	0.504168	Minor CBC Ratio
214	W12x106	Column	No Messages	1.013794	Minor CBC Ratio
215	W12x106	Column	No Messages	0.506209	Minor CBC Ratio
216	W12x106	Column	No Messages	0.508345	Minor CBC Ratio
217	W12x106	Column	No Messages	0.506827	Minor CBC Ratio
218	W12x106	Column	No Messages	0.506696	Minor CBC Ratio
219	W12x106	Column	No Messages	0.508183	Minor CBC Ratio
220	W12x106	Column	No Messages	0.505624	Minor CBC Ratio
221	W12x106	Column	No Messages	1.013715	Minor CBC Ratio
222	W12x106	Column	No Messages	1.009401	Minor CBC Ratio
223	W12x106	Column	No Messages	0.506456	Minor CBC Ratio
224	W12x106	Column	No Messages	0.505117	Minor CBC Ratio
225	W12x106	Column	No Messages	0.502998	Minor CBC Ratio
226	W12x106	Column	No Messages	0.493423	Minor CBC Ratio
227	W12x106	Column	No Messages	0.59192	Major CBC Ratio
228	W12x106	Column	No Messages	0.591953	Major CBC Ratio
229	W12x106	Column	No Messages	0.505808	Minor CBC Ratio
230	W12x106	Column	No Messages	0.505581	Minor CBC Ratio
231	W12x106	Column	No Messages	1.009175	Minor CBC Ratio
243	IPE360	Beam	No Messages	0.090972	PMM
244	IPE240	Beam	No Messages	0.030395	PMM
246	IPE240	Beam	No Messages	0.079632	PMM

Table 39: Steel Design 1 - Summary Data - AISC 360-10, Part 1 of 2

Frame	DesignSect	DesignType	Status	Ratio	RatioType
247	IPE240	Beam	No Messages	0.098093	PMM
248	IPE240	Beam	No Messages	0.098165	PMM
249	IPE240	Beam	No Messages	0.084046	PMM
250	IPE240	Beam	No Messages	0.048342	PMM
251	IPE240	Beam	No Messages	0.10135	PMM
252	IPE240	Beam	No Messages	0.101222	PMM
253	IPE240	Beam	No Messages	0.058263	PMM
254	IPE240	Beam	No Messages	0.034251	PMM
255	IPE240	Beam	No Messages	0.034169	PMM
256	IPE240	Beam	No Messages	0.047304	PMM
257	IPE240	Beam	No Messages	0.047329	PMM
258	IPE240	Beam	No Messages	0.044558	PMM
259	IPE240	Beam	No Messages	0.044613	PMM
260	IPE240	Beam	No Messages	0.024778	PMM
261	IPE240	Beam	No Messages	0.024759	PMM
262	IPE240	Beam	No Messages	0.097291	PMM
263	IPE240	Beam	No Messages	0.097407	PMM
264	IPE240	Beam	No Messages	0.061952	PMM
265	IPE240	Beam	No Messages	0.088993	PMM
266	IPE240	Beam	No Messages	0.091032	PMM
267	IPE240	Beam	No Messages	0.090916	PMM
268	IPE240	Beam	No Messages	0.062832	PMM
269	IPE240	Beam	No Messages	0.100134	PMM
270	IPE240	Beam	No Messages	0.127508	PMM
271	IPE240	Beam	No Messages	0.12943	PMM
272	IPE240	Beam	No Messages	0.116153	PMM
273	IPE240	Beam	No Messages	0.095665	PMM
274	IPE360	Beam	No Messages	0.134106	PMM
275	IPE240	Beam	No Messages	0.083441	PMM
276	IPE240	Beam	No Messages	0.082582	PMM
277	IPE240	Beam	No Messages	0.084156	PMM
278	IPE240	Beam	No Messages	0.082427	PMM
279	IPE360	Beam	No Messages	0.120751	PMM
280	IPE240	Beam	No Messages	0.084879	PMM
281	IPE240	Beam	No Messages	0.084336	PMM
282	IPE360	Beam	No Messages	0.114718	PMM
283	IPE240	Beam	No Messages	0.08635	PMM
284	IPE240	Beam	No Messages	0.086958	PMM
285	IPE240	Beam	No Messages	0.088211	PMM
286	IPE360	Beam	No Messages	0.127184	PMM
287	IPE240	Beam	No Messages	0.10415	PMM
288	IPE240	Beam	No Messages	0.115287	PMM
289	IPE240	Beam	No Messages	0.120337	PMM
290	IPE240	Beam	No Messages	0.113814	PMM
291	IPE240	Beam	No Messages	0.083194	PMM
292	IPE240	Beam	No Messages	0.100154	PMM
293	IPE240	Beam	No Messages	0.127313	PMM
294	IPE240	Beam	No Messages	0.129524	PMM
295	IPE240	Beam	No Messages	0.11619	PMM
296	IPE240	Beam	No Messages	0.095932	PMM
297	IPE360	Beam	No Messages	0.143941	PMM
298	IPE240	Beam	No Messages	0.083333	PMM
299	IPE240	Beam	No Messages	0.082755	PMM
300	IPE240	Beam	No Messages	0.084136	PMM

Table 39: Steel Design 1 - Summary Data - AISC 360-10, Part 1 of 2

Frame	DesignSect	DesignType	Status	Ratio	RatioType
301	IPE240	Beam	No Messages	0.08251	PMM
302	IPE360	Beam	No Messages	0.110591	PMM
303	IPE240	Beam	No Messages	0.084966	PMM
304	IPE240	Beam	No Messages	0.08442	PMM
305	IPE360	Beam	No Messages	0.110855	PMM
306	IPE240	Beam	No Messages	0.086358	PMM
307	IPE240	Beam	No Messages	0.086974	PMM
308	IPE240	Beam	No Messages	0.088195	PMM
309	IPE360	Beam	No Messages	0.16432	PMM
310	IPE240	Beam	No Messages	0.104072	PMM
311	IPE240	Beam	No Messages	0.115199	PMM
312	IPE240	Beam	No Messages	0.120085	PMM
313	IPE240	Beam	No Messages	0.113613	PMM
314	IPE240	Beam	No Messages	0.082895	PMM
315	IPE360	Beam	No Messages	0.098862	PMM
316	IPE360	Beam	No Messages	0.049247	PMM
317	IPE360	Beam	No Messages	0.057964	PMM
318	IPE360	Beam	No Messages	0.057948	PMM
319	IPE360	Beam	No Messages	0.055743	PMM
320	IPE360	Beam	No Messages	0.105119	PMM
321	IPE360	Beam	No Messages	0.07002	PMM
322	IPE360	Beam	No Messages	0.036597	PMM
323	IPE360	Beam	No Messages	0.024222	PMM
324	IPE360	Beam	No Messages	0.024428	PMM
325	IPE360	Beam	No Messages	0.066587	PMM
326	IPE360	Beam	No Messages	0.05165	PMM
327	IPE360	Beam	No Messages	0.019408	PMM
328	IPE360	Beam	No Messages	0.053761	PMM
329	IPE360	Beam	No Messages	0.060268	PMM
330	IPE360	Beam	No Messages	0.022945	PMM
331	IPE360	Beam	No Messages	0.022999	PMM
332	IPE360	Beam	No Messages	0.067764	PMM
333	IPE360	Beam	No Messages	0.104807	PMM
334	IPE360	Beam	No Messages	0.048637	PMM
335	IPE360	Beam	No Messages	0.061863	PMM
336	IPE360	Beam	No Messages	0.061861	PMM
337	IPE360	Beam	No Messages	0.04363	PMM
338	IPE360	Beam	No Messages	0.105837	PMM
339	IPE360	Beam	No Messages	0.102641	PMM
340	IPE360	Beam	No Messages	0.046687	PMM
341	IPE360	Beam	No Messages	0.057004	PMM
342	IPE360	Beam	No Messages	0.05415	PMM
343	IPE360	Beam	No Messages	0.053799	PMM
344	IPE360	Beam	No Messages	0.046291	Major Shear
345	IPE360	Beam	No Messages	0.052941	PMM
346	IPE360	Beam	No Messages	0.091905	PMM
347	IPE360	Beam	No Messages	0.099335	PMM
348	IPE360	Beam	No Messages	0.050438	PMM
349	IPE360	Beam	No Messages	0.052157	PMM
350	IPE360	Beam	No Messages	0.054813	PMM
351	IPE360	Beam	No Messages	0.056143	PMM
352	IPE360	Beam	No Messages	0.056191	Major Shear
353	IPE360	Beam	No Messages	0.111257	PMM
354	IPE360	Beam	No Messages	0.097215	PMM

Table 39: Steel Design 1 - Summary Data - AISC 360-10, Part 1 of 2

Frame	DesignSect	DesignType	Status	Ratio	RatioType
355	IPE360	Beam	No Messages	0.046433	PMM
356	IPE360	Beam	No Messages	0.046803	PMM
357	IPE360	Beam	No Messages	0.044991	PMM
358	IPE360	Beam	No Messages	0.098423	PMM
359	IPE360	Beam	No Messages	0.066999	PMM
360	IPE360	Beam	No Messages	0.015026	PMM
361	IPE360	Beam	No Messages	0.01729	PMM
362	IPE360	Beam	No Messages	0.068925	PMM
363	IPE360	Beam	No Messages	0.158264	PMM
364	IPE360	Beam	No Messages	0.080503	PMM
365	IPE360	Beam	No Messages	0.108576	PMM
366	IPE360	Beam	No Messages	0.108622	PMM
367	IPE360	Beam	No Messages	0.079683	PMM
368	IPE360	Beam	No Messages	0.186166	PMM
369	IPE360	Beam	No Messages	0.065532	PMM
370	IPE360	Beam	No Messages	0.032383	PMM
371	IPE360	Beam	No Messages	0.032369	PMM
372	IPE360	Beam	No Messages	0.063824	PMM
375	IPE360	Beam	No Messages	0.074178	PMM
376	IPE360	Beam	No Messages	0.037496	PMM
377	IPE360	Beam	No Messages	0.04253	PMM
378	IPE360	Beam	No Messages	0.039871	PMM
379	IPE360	Beam	No Messages	0.066249	PMM
388	IPE300	Beam	No Messages	0.04589	PMM
389	IPE300	Beam	No Messages	0.045908	PMM
390	IPE300	Beam	No Messages	0.015098	PMM
391	IPE300	Beam	No Messages	0.049245	PMM
392	IPE300	Beam	No Messages	0.049216	PMM
393	IPE300	Beam	No Messages	0.076244	PMM
394	IPE300	Beam	No Messages	0.104081	PMM
395	IPE300	Beam	No Messages	0.104338	PMM
396	IPE300	Beam	No Messages	0.125644	PMM
397	IPE300	Beam	No Messages	0.125642	PMM
398	IPE300	Beam	No Messages	0.11889	PMM
399	IPE300	Beam	No Messages	0.223065	PMM
400	IPE360	Beam	No Messages	0.011605	PMM
412	W12x106	Column	No Messages	0.025752	PMM
413	W12x106	Column	No Messages	0.019171	PMM
414	W12x106	Column	No Messages	0.026313	PMM
415	W12x106	Column	No Messages	0.022065	PMM
416	W12x106	Column	No Messages	0.0177	PMM
417	W12x106	Column	No Messages	0.01576	PMM
418	W12x106	Column	No Messages	0.018978	PMM
419	W12x106	Column	No Messages	0.028278	PMM
420	W12x106	Column	No Messages	0.024341	PMM
421	W12x106	Column	No Messages	0.03839	PMM
422	W12x106	Column	No Messages	0.037387	PMM
423	W12x106	Column	No Messages	0.014076	PMM
424	W12x106	Column	No Messages	0.011839	PMM
425	W12x106	Column	No Messages	0.01827	PMM
426	W12x106	Column	No Messages	0.072974	PMM
427	W12x106	Column	No Messages	0.058086	PMM
428	W12x106	Column	No Messages	0.060204	PMM
429	W12x106	Column	No Messages	0.072927	PMM

Table 39: Steel Design 1 - Summary Data - AISC 360-10, Part 1 of 2

Frame	DesignSect	DesignType	Status	Ratio	RatioType
430	W12x106	Column	No Messages	0.050101	PMM
431	W12x106	Column	No Messages	0.028909	PMM
432	W12x106	Column	No Messages	0.02329	PMM
433	IPE240	Beam	No Messages	0.017033	PMM
434	W12x106	Column	No Messages	0.028417	PMM
435	W12x106	Column	No Messages	0.013997	PMM
436	W12x106	Column	No Messages	0.014077	PMM
437	IPE360	Beam	No Messages	0.018599	PMM
438	IPE360	Beam	No Messages	0.017431	PMM
439	IPE360	Beam	No Messages	0.054842	PMM
440	IPE360	Beam	No Messages	0.037567	PMM
441	IPE360	Beam	No Messages	0.032101	PMM
442	IPE360	Beam	No Messages	0.025811	PMM
443	IPE360	Beam	No Messages	0.032628	PMM
444	IPE360	Beam	No Messages	0.033892	PMM
445	IPE360	Beam	No Messages	0.069503	PMM
446	IPE360	Beam	No Messages	0.032369	PMM
447	IPE360	Beam	No Messages	0.051864	PMM
448	IPE360	Beam	No Messages	0.046625	PMM
449	IPE360	Beam	No Messages	0.051026	PMM
450	IPE360	Beam	No Messages	0.028718	PMM
451	IPE360	Beam	No Messages	0.018303	PMM
452	IPE360	Beam	No Messages	0.019007	PMM
454	IPE360	Beam	No Messages	0.03197	PMM
455	IPE400	Beam	No Messages	0.046526	PMM
456	IPE400	Beam	No Messages	0.030678	PMM
457	IPE400	Beam	No Messages	0.041506	PMM
458	W24x55	Beam	No Messages	0.014648	PMM
459	W24x55	Beam	No Messages	0.014906	PMM
460	W24x55	Beam	No Messages	0.013066	PMM
461	W24x55	Beam	No Messages	0.015497	PMM
462	IPE360	Beam	No Messages	0.023563	PMM
463	IPE360	Beam	No Messages	0.048664	PMM
464	IPE360	Beam	No Messages	0.076303	PMM
465	IPE360	Beam	No Messages	0.06228	PMM
466	IPE360	Beam	No Messages	0.063391	PMM
467	IPE360	Beam	No Messages	0.076635	PMM
468	IPE360	Beam	No Messages	0.047111	PMM
469	IPE300	Beam	No Messages	0.025592	PMM
470	IPE300	Beam	No Messages	0.0149	PMM
471	IPE300	Beam	No Messages	0.014786	PMM
472	IPE300	Beam	No Messages	0.014057	PMM
473	IPE300	Beam	No Messages	0.026547	PMM
478	IPE300	Beam	No Messages	0.002435	PMM
493	IPE300	Beam	No Messages	0.002138	PMM
507	IPE400	Beam	No Messages	0.092592	PMM
508	IPE400	Beam	No Messages	0.041431	PMM
509	IPE400	Beam	No Messages	0.041376	PMM
510	IPE400	Beam	No Messages	0.03781	PMM
511	IPE400	Beam	No Messages	0.093409	PMM
512	IPE400	Beam	No Messages	0.087432	PMM
513	IPE400	Beam	No Messages	0.064821	PMM
514	IPE400	Beam	No Messages	0.042002	PMM
515	IPE400	Beam	No Messages	0.081245	PMM

Table 39: Steel Design 1 - Summary Data - AISC 360-10, Part 1 of 2

Frame	DesignSect	DesignType	Status	Ratio	RatioType
516	IPE400	Beam	No Messages	0.07077	PMM
517	IPE400	Beam	No Messages	0.058054	PMM
518	IPE400	Beam	No Messages	0.022351	PMM
519	IPE400	Beam	No Messages	0.034423	PMM
520	IPE400	Beam	No Messages	0.069789	PMM
521	IPE360	Beam	No Messages	0.111771	PMM
522	IPE360	Beam	No Messages	0.039857	PMM
523	IPE360	Beam	No Messages	0.044845	PMM
524	IPE360	Beam	No Messages	0.047497	PMM
525	IPE360	Beam	No Messages	0.104296	PMM
526	IPE360	Beam	No Messages	0.146935	PMM
527	IPE360	Beam	No Messages	0.054633	PMM
528	IPE360	Beam	No Messages	0.06163	PMM
529	IPE360	Beam	No Messages	0.061543	PMM
530	IPE360	Beam	No Messages	0.136011	PMM
531	IPE360	Beam	No Messages	0.133345	PMM
533	IPE360	Beam	No Messages	0.12505	PMM
535	IPE360	Beam	No Messages	0.077919	PMM
536	IPE360	Beam	No Messages	0.099119	PMM
537	IPE400	Beam	No Messages	0.063035	PMM
538	IPE400	Beam	No Messages	0.03224	PMM
539	IPE400	Beam	No Messages	0.03218	PMM
540	IPE400	Beam	No Messages	0.030108	PMM
541	IPE400	Beam	No Messages	0.06778	PMM
542	IPE400	Beam	No Messages	0.060284	PMM
543	IPE400	Beam	No Messages	0.04108	PMM
544	IPE400	Beam	No Messages	0.023664	PMM
545	IPE400	Beam	No Messages	0.054681	PMM
546	IPE400	Beam	No Messages	0.048454	PMM
547	IPE400	Beam	No Messages	0.037526	PMM
548	IPE400	Beam	No Messages	0.013336	PMM
549	IPE400	Beam	No Messages	0.02187	PMM
550	IPE400	Beam	No Messages	0.039377	PMM
551	IPE360	Beam	No Messages	0.076453	PMM
552	IPE360	Beam	No Messages	0.03383	PMM
553	IPE360	Beam	No Messages	0.035847	PMM
554	IPE360	Beam	No Messages	0.035904	PMM
555	IPE360	Beam	No Messages	0.075633	PMM
556	IPE360	Beam	No Messages	0.107413	PMM
557	IPE360	Beam	No Messages	0.054326	PMM
558	IPE360	Beam	No Messages	0.05443	PMM
559	IPE360	Beam	No Messages	0.054156	PMM
561	IPE360	Beam	No Messages	0.097522	PMM
562	IPE360	Beam	No Messages	0.036628	PMM
563	IPE360	Beam	No Messages	0.14263	PMM
565	IPE360	Beam	No Messages	0.027145	PMM
566	IPE360	Beam	No Messages	0.032882	PMM
567	IPE300	Beam	No Messages	0.060111	PMM
569	IPE300	Beam	No Messages	0.119727	PMM
571	IPE240	Beam	No Messages	0.154011	PMM
573	IPE300	Beam	No Messages	0.239265	PMM
575	IPE240	Beam	No Messages	0.035993	PMM
577	IPE300	Beam	No Messages	0.02016	PMM
579	IPE240	Beam	No Messages	0.035355	PMM

Table 39: Steel Design 1 - Summary Data - AISC 360-10, Part 1 of 2

Frame	DesignSect	DesignType	Status	Ratio	RatioType
581	IPE240	Beam	No Messages	0.037032	PMM
583	IPE240	Beam	No Messages	0.032905	PMM
585	IPE240	Beam	No Messages	0.031742	PMM
587	IPE300	Beam	No Messages	0.060728	PMM
589	IPE300	Beam	No Messages	0.108827	PMM
591	IPE300	Beam	No Messages	0.125696	PMM
593	IPE300	Beam	No Messages	0.20039	PMM
595	IPE240	Beam	No Messages	0.035958	PMM
599	IPE240	Beam	No Messages	0.035315	PMM
601	IPE240	Beam	No Messages	0.036988	PMM
603	IPE240	Beam	No Messages	0.032892	PMM
605	IPE240	Beam	No Messages	0.031715	PMM
607	IPE360	Beam	No Messages	0.040921	PMM
608	IPE360	Beam	No Messages	0.040963	PMM
610	IPE240	Beam	No Messages	0.032714	PMM
613	IPE360	Beam	No Messages	0.053781	PMM
614	IPE360	Beam	No Messages	0.053777	PMM
615	IPE360	Beam	No Messages	0.053264	PMM
616	IPE360	Beam	No Messages	0.028719	PMM
617	IPE360	Beam	No Messages	0.058845	PMM
618	IPE360	Beam	No Messages	0.035585	PMM
619	IPE240	Beam	No Messages	0.066101	PMM
620	IPE240	Beam	No Messages	0.021771	PMM
621	IPE240	Beam	No Messages	0.047856	PMM
622	IPE240	Beam	No Messages	0.010946	PMM
623	IPE240	Beam	No Messages	0.032278	PMM
624	IPE240	Beam	No Messages	0.019279	PMM
625	IPE300	Beam	No Messages	0.030892	PMM
626	IPE240	Beam	No Messages	0.02753	PMM
627	IPE360	Beam	No Messages	0.035216	PMM
628	IPE360	Beam	No Messages	0.137474	PMM
629	IPE360	Beam	No Messages	0.006182	PMM
630	IPE360	Beam	No Messages	0.068472	PMM
631	IPE360	Beam	No Messages	0.109507	PMM
475	IPE240	Beam	No Messages	0.055569	PMM
476	IPE240	Beam	No Messages	0.078612	PMM
477	IPE240	Beam	No Messages	0.078617	PMM
479	IPE240	Beam	No Messages	0.070715	PMM
480	IPE240	Beam	No Messages	0.037951	PMM
481	IPE240	Beam	No Messages	0.090514	PMM
482	IPE240	Beam	No Messages	0.09042	PMM
483	IPE240	Beam	No Messages	0.04462	PMM
484	IPE240	Beam	No Messages	0.028758	PMM
489	IPE240	Beam	No Messages	0.028771	PMM
490	IPE240	Beam	No Messages	0.045874	PMM
491	IPE240	Beam	No Messages	0.045724	PMM
492	IPE240	Beam	No Messages	0.042469	PMM
494	IPE240	Beam	No Messages	0.042414	PMM
495	IPE240	Beam	No Messages	0.023946	PMM
496	IPE240	Beam	No Messages	0.023973	PMM
497	IPE240	Beam	No Messages	0.085326	PMM
498	IPE240	Beam	No Messages	0.085494	PMM
499	IPE240	Beam	No Messages	0.052276	PMM
504	IPE240	Beam	No Messages	0.074027	PMM

Table 39: Steel Design 1 - Summary Data - AISC 360-10, Part 1 of 2

Frame	DesignSect	DesignType	Status	Ratio	RatioType
560	IPE240	Beam	No Messages	0.073991	PMM
597	IPE240	Beam	No Messages	0.070907	PMM
611	IPE240	Beam	No Messages	0.016407	PMM
612	IPE240	Beam	No Messages	0.052656	PMM
632	IPE240	Beam	No Messages	0.076976	PMM
633	IPE240	Beam	No Messages	0.076855	PMM
634	IPE240	Beam	No Messages	0.069816	PMM
635	IPE240	Beam	No Messages	0.041705	PMM
636	IPE240	Beam	No Messages	0.098524	PMM
637	IPE240	Beam	No Messages	0.09868	PMM
638	IPE240	Beam	No Messages	0.045951	PMM
639	IPE240	Beam	No Messages	0.034119	PMM
640	IPE240	Beam	No Messages	0.034076	PMM
641	IPE240	Beam	No Messages	0.046078	PMM
642	IPE240	Beam	No Messages	0.046114	PMM
643	IPE240	Beam	No Messages	0.038465	PMM
644	IPE240	Beam	No Messages	0.038485	PMM
645	IPE240	Beam	No Messages	0.022433	PMM
646	IPE240	Beam	No Messages	0.022422	PMM
647	IPE240	Beam	No Messages	0.103294	PMM
648	IPE240	Beam	No Messages	0.103302	PMM
649	IPE240	Beam	No Messages	0.057371	PMM
650	IPE240	Beam	No Messages	0.087311	PMM
651	IPE240	Beam	No Messages	0.087302	PMM
652	IPE240	Beam	No Messages	0.073747	PMM
654	IPE240	Beam	No Messages	0.017933	PMM
233	IPE360	Beam	No Messages	0.045988	PMM
234	IPE360	Beam	No Messages	0.0461	PMM
240	IPE360	Beam	No Messages	0.047379	PMM
241	IPE360	Beam	No Messages	0.045157	PMM
500	IPE240	Beam	No Messages	0.020945	PMM
501	IPE240	Beam	No Messages	0.033989	PMM
502	IPE240	Beam	No Messages	0.033984	PMM
503	IPE240	Beam	No Messages	0.027581	PMM
655	IPE240	Beam	No Messages	0.005226	PMM
662	IPE360	Beam	No Messages	0.027853	Major Shear
663	IPE240	Beam	No Messages	0.068094	PMM
664	IPE240	Beam	No Messages	0.085498	PMM
665	IPE240	Beam	No Messages	0.085529	PMM
666	IPE240	Beam	No Messages	0.073956	PMM
673	IPE240	Beam	No Messages	0.064372	PMM
674	IPE240	Beam	No Messages	0.064367	PMM
675	IPE240	Beam	No Messages	0.050947	PMM
676	IPE240	Beam	No Messages	0.047102	PMM
677	IPE240	Beam	No Messages	0.067862	PMM
678	IPE240	Beam	No Messages	0.067901	PMM
679	IPE240	Beam	No Messages	0.056067	PMM
680	IPE240	Beam	No Messages	0.048941	PMM
681	IPE360	Beam	No Messages	0.07382	PMM
682	IPE360	Beam	No Messages	0.035281	PMM
683	IPE360	Beam	No Messages	0.033982	PMM
684	IPE360	Beam	No Messages	0.078333	PMM
685	IPE360	Beam	No Messages	0.092532	PMM
686	IPE360	Beam	No Messages	0.02824	PMM

Table 39: Steel Design 1 - Summary Data - AISC 360-10, Part 1 of 2

Frame	DesignSect	DesignType	Status	Ratio	RatioType
687	IPE360	Beam	No Messages	0.033488	PMM
688	IPE360	Beam	No Messages	0.058645	PMM
689	IPE240	Beam	No Messages	0.028086	PMM
690	IPE240	Beam	No Messages	0.080056	PMM
691	IPE240	Beam	No Messages	0.080422	PMM
692	IPE240	Beam	No Messages	0.027033	PMM
693	IPE240	Beam	No Messages	0.032689	PMM
694	IPE240	Beam	No Messages	0.096643	PMM
695	IPE240	Beam	No Messages	0.096771	PMM
696	IPE240	Beam	No Messages	0.031917	PMM
697	IPE240	Beam	No Messages	0.027653	PMM
698	IPE240	Beam	No Messages	0.084468	PMM
699	IPE240	Beam	No Messages	0.084775	PMM
700	IPE240	Beam	No Messages	0.024415	PMM
701	IPE240	Beam	No Messages	0.042064	PMM
702	IPE240	Beam	No Messages	0.029877	PMM
703	IPE360	Beam	No Messages	0.068532	PMM
704	IPE360	Beam	No Messages	0.050753	PMM
705	IPE360	Beam	No Messages	0.050962	PMM
706	IPE360	Beam	No Messages	0.066122	PMM
709	IPE240	Beam	No Messages	0.02058	PMM
710	IPE240	Beam	No Messages	0.013991	PMM
711	IPE240	Beam	No Messages	0.026453	PMM
712	IPE240	Beam	No Messages	0.014611	PMM
713	IPE240	Beam	No Messages	0.019945	PMM
714	IPE240	Beam	No Messages	0.013464	PMM
715	IPE240	Beam	No Messages	0.025951	PMM
716	IPE240	Beam	No Messages	0.010934	PMM
717	IPE240	Beam	No Messages	0.020607	PMM
718	IPE240	Beam	No Messages	0.026515	PMM
719	IPE360	Beam	No Messages	0.041481	PMM
720	IPE360	Beam	No Messages	0.014377	PMM
721	IPE360	Beam	No Messages	0.034652	PMM
722	IPE360	Beam	No Messages	0.037149	PMM
723	IPE360	Beam	No Messages	0.01521	PMM
724	IPE360	Beam	No Messages	0.034316	PMM
725	IPE240	Beam	No Messages	0.020318	PMM
726	IPE240	Beam	No Messages	0.007527	PMM
727	IPE240	Beam	No Messages	0.008672	PMM
728	IPE240	Beam	No Messages	0.00903	PMM
729	IPE240	Beam	No Messages	0.008385	PMM
730	IPE240	Beam	No Messages	0.008373	PMM
731	IPE240	Beam	No Messages	0.009925	PMM
732	IPE240	Beam	No Messages	0.009703	PMM
733	IPE240	Beam	No Messages	0.007908	PMM
734	IPE240	Beam	No Messages	0.028513	PMM
735	IPE240	Beam	No Messages	0.007066	PMM
736	IPE240	Beam	No Messages	0.008532	PMM
737	IPE240	Beam	No Messages	0.032399	PMM
738	IPE240	Beam	No Messages	0.032275	PMM
739	IPE240	Beam	No Messages	0.022056	PMM
740	IPE240	Beam	No Messages	0.005544	PMM
741	IPE240	Beam	No Messages	0.029999	PMM
742	IPE240	Beam	No Messages	0.030044	PMM

Table 39: Steel Design 1 - Summary Data - AISC 360-10, Part 1 of 2

Frame	DesignSect	DesignType	Status	Ratio	RatioType
743	IPE240	Beam	No Messages	0.01157	PMM
744	IPE240	Beam	No Messages	0.012458	PMM
745	IPE240	Beam	No Messages	0.036855	PMM
746	IPE240	Beam	No Messages	0.041608	PMM
747	IPE240	Beam	No Messages	0.041591	PMM
749	IPE240	Beam	No Messages	0.03026	PMM
750	IPE240	Beam	No Messages	0.004139	PMM
751	IPE360	Beam	No Messages	0.112493	PMM
752	IPE360	Beam	No Messages	0.071967	PMM
753	IPE300	Beam	No Messages	0.0608	PMM
754	IPE300	Beam	No Messages	0.027758	PMM
755	IPE300	Beam	No Messages	0.108605	PMM
756	IPE300	Beam	No Messages	0.041002	PMM
757	IPE300	Beam	No Messages	0.125417	PMM
758	IPE300	Beam	No Messages	0.061974	PMM
759	IPE300	Beam	No Messages	0.200119	PMM
760	IPE300	Beam	No Messages	0.091295	PMM
761	IPE240	Beam	No Messages	0.035781	PMM
762	IPE240	Beam	No Messages	0.034757	PMM
763	IPE240	Beam	No Messages	0.03245	PMM
764	IPE240	Beam	No Messages	0.015181	PMM
765	IPE240	Beam	No Messages	0.035258	PMM
766	IPE240	Beam	No Messages	0.035077	PMM
767	IPE240	Beam	No Messages	0.036919	PMM
768	IPE240	Beam	No Messages	0.004204	PMM
769	IPE240	Beam	No Messages	0.032742	PMM
770	IPE240	Beam	No Messages	0.004171	PMM
771	IPE240	Beam	No Messages	0.031545	PMM
772	IPE240	Beam	No Messages	0.007603	PMM
773	IPE240	Beam	No Messages	0.004449	PMM
775	IPE240	Beam	No Messages	0.055415	PMM
776	IPE240	Beam	No Messages	0.064335	PMM
777	IPE240	Beam	No Messages	0.064329	PMM
778	IPE240	Beam	No Messages	0.050272	PMM
779	IPE240	Beam	No Messages	0.066982	PMM
780	IPE240	Beam	No Messages	0.084139	PMM
781	IPE240	Beam	No Messages	0.084245	PMM
782	IPE240	Beam	No Messages	0.072867	PMM
783	IPE240	Beam	No Messages	0.055017	PMM
784	IPE240	Beam	No Messages	0.068808	PMM
785	IPE240	Beam	No Messages	0.068904	PMM
786	IPE240	Beam	No Messages	0.056882	PMM
787	IPE360	Beam	No Messages	0.135411	PMM
788	IPE360	Beam	No Messages	0.065146	PMM
789	IPE360	Beam	No Messages	0.048324	PMM
790	IPE360	Beam	No Messages	0.064643	PMM
791	IPE360	Beam	No Messages	0.139302	PMM
792	IPE360	Beam	No Messages	0.126396	PMM
793	IPE360	Beam	No Messages	0.038027	PMM
794	IPE360	Beam	No Messages	0.053779	PMM
795	IPE360	Beam	No Messages	0.046589	PMM
796	IPE360	Beam	No Messages	0.05614	PMM
797	IPE360	Beam	No Messages	0.106918	PMM
798	IPE240	Beam	No Messages	0.037167	PMM

Table 39: Steel Design 1 - Summary Data - AISC 360-10, Part 1 of 2

Frame	DesignSect	DesignType	Status	Ratio	RatioType
799	IPE240	Beam	No Messages	0.078375	PMM
800	IPE240	Beam	No Messages	0.08174	PMM
801	IPE240	Beam	No Messages	0.082161	PMM
802	IPE240	Beam	No Messages	0.036258	PMM
803	IPE240	Beam	No Messages	0.031844	PMM
804	IPE240	Beam	No Messages	0.094143	PMM
805	IPE240	Beam	No Messages	0.097617	PMM
806	IPE240	Beam	No Messages	0.097331	PMM
807	IPE240	Beam	No Messages	0.034383	PMM
808	IPE240	Beam	No Messages	0.029001	PMM
809	IPE240	Beam	No Messages	0.0819	PMM
810	IPE240	Beam	No Messages	0.086153	PMM
811	IPE240	Beam	No Messages	0.085904	PMM
812	IPE240	Beam	No Messages	0.0296	PMM
813	IPE240	Beam	No Messages	0.078134	PMM
814	IPE240	Beam	No Messages	0.078077	PMM
815	IPE240	Beam	No Messages	0.070109	PMM
816	IPE240	Beam	No Messages	0.04309	PMM
817	IPE240	Beam	No Messages	0.101302	PMM
818	IPE240	Beam	No Messages	0.101295	PMM
819	IPE240	Beam	No Messages	0.046966	PMM
820	IPE240	Beam	No Messages	0.036995	PMM
821	IPE240	Beam	No Messages	0.037041	PMM
822	IPE240	Beam	No Messages	0.058742	PMM
823	IPE240	Beam	No Messages	0.058612	PMM
824	IPE240	Beam	No Messages	0.022266	PMM
825	IPE240	Beam	No Messages	0.046405	PMM
826	IPE240	Beam	No Messages	0.046558	PMM
827	IPE240	Beam	No Messages	0.023226	PMM
828	IPE240	Beam	No Messages	0.023198	PMM
829	IPE240	Beam	No Messages	0.106768	PMM
830	IPE240	Beam	No Messages	0.106934	PMM
831	IPE240	Beam	No Messages	0.06691	PMM
832	IPE240	Beam	No Messages	0.092187	PMM
833	IPE240	Beam	No Messages	0.092216	PMM
834	IPE240	Beam	No Messages	0.079103	PMM
835	IPE240	Beam	No Messages	0.037428	PMM
836	IPE240	Beam	No Messages	0.057791	PMM
837	IPE240	Beam	No Messages	0.077763	PMM
838	IPE240	Beam	No Messages	0.077734	PMM
839	IPE240	Beam	No Messages	0.070172	PMM
840	IPE240	Beam	No Messages	0.040214	PMM
841	IPE240	Beam	No Messages	0.097823	PMM
842	IPE240	Beam	No Messages	0.097744	PMM
843	IPE240	Beam	No Messages	0.045125	PMM
844	IPE240	Beam	No Messages	0.029522	PMM
845	IPE240	Beam	No Messages	0.029528	PMM
846	IPE240	Beam	No Messages	0.04922	PMM
847	IPE240	Beam	No Messages	0.049008	PMM
848	IPE240	Beam	No Messages	0.018489	PMM
849	IPE240	Beam	No Messages	0.044153	PMM
850	IPE240	Beam	No Messages	0.044157	PMM
851	IPE240	Beam	No Messages	0.023389	PMM
852	IPE240	Beam	No Messages	0.023351	PMM

Table 39: Steel Design 1 - Summary Data - AISC 360-10, Part 1 of 2

Frame	DesignSect	DesignType	Status	Ratio	RatioType
853	IPE240	Beam	No Messages	0.087592	PMM
854	IPE240	Beam	No Messages	0.087753	PMM
855	IPE240	Beam	No Messages	0.055363	PMM
856	IPE240	Beam	No Messages	0.077775	PMM
857	IPE240	Beam	No Messages	0.077799	PMM
858	IPE240	Beam	No Messages	0.073706	PMM
859	IPE240	Beam	No Messages	0.045491	PMM
860	IPE240	Beam	No Messages	0.063691	PMM
861	IPE240	Beam	No Messages	0.048104	PMM
862	IPE240	Beam	No Messages	0.100254	PMM
863	IPE240	Beam	No Messages	0.046095	PMM
864	IPE240	Beam	No Messages	0.127096	PMM
865	IPE240	Beam	No Messages	0.047069	PMM
866	IPE240	Beam	No Messages	0.129254	PMM
867	IPE240	Beam	No Messages	0.040453	PMM
868	IPE240	Beam	No Messages	0.115889	PMM
869	IPE240	Beam	No Messages	0.041696	PMM
870	IPE240	Beam	No Messages	0.095591	PMM
871	IPE360	Beam	No Messages	0.169289	PMM
872	IPE360	Beam	No Messages	0.119422	PMM
873	IPE240	Beam	No Messages	0.039563	PMM
874	IPE240	Beam	No Messages	0.083046	PMM
875	IPE240	Beam	No Messages	0.026134	PMM
876	IPE240	Beam	No Messages	0.081986	PMM
877	IPE240	Beam	No Messages	0.02036	PMM
878	IPE240	Beam	No Messages	0.082899	PMM
879	IPE240	Beam	No Messages	0.025053	PMM
880	IPE240	Beam	No Messages	0.080883	PMM
881	IPE360	Beam	No Messages	0.136658	PMM
882	IPE360	Beam	No Messages	0.108338	PMM
883	IPE240	Beam	No Messages	0.025301	PMM
884	IPE240	Beam	No Messages	0.083148	PMM
885	IPE240	Beam	No Messages	0.020532	PMM
886	IPE240	Beam	No Messages	0.082408	PMM
887	IPE360	Beam	No Messages	0.121654	PMM
888	IPE360	Beam	No Messages	0.107874	PMM
889	IPE240	Beam	No Messages	0.02535	PMM
890	IPE240	Beam	No Messages	0.084976	PMM
891	IPE240	Beam	No Messages	0.020698	PMM
892	IPE240	Beam	No Messages	0.087118	PMM
893	IPE240	Beam	No Messages	0.024777	PMM
894	IPE240	Beam	No Messages	0.090116	PMM
895	IPE360	Beam	No Messages	0.132611	PMM
896	IPE360	Beam	No Messages	0.132647	PMM
897	IPE240	Beam	No Messages	0.039283	PMM
898	IPE240	Beam	No Messages	0.109785	PMM
899	IPE240	Beam	No Messages	0.04404	PMM
900	IPE240	Beam	No Messages	0.120734	PMM
901	IPE240	Beam	No Messages	0.048937	PMM
902	IPE240	Beam	No Messages	0.126418	PMM
903	IPE240	Beam	No Messages	0.045042	PMM
904	IPE240	Beam	No Messages	0.118878	PMM
905	IPE240	Beam	No Messages	0.035803	PMM
906	IPE240	Beam	No Messages	0.086515	PMM

Table 39: Steel Design 1 - Summary Data - AISC 360-10, Part 1 of 2

Frame	DesignSect	DesignType	Status	Ratio	RatioType
907	IPE240	Beam	No Messages	0.100421	PMM
908	IPE240	Beam	No Messages	0.040937	PMM
909	IPE240	Beam	No Messages	0.126986	PMM
910	IPE240	Beam	No Messages	0.044672	PMM
911	IPE240	Beam	No Messages	0.129476	PMM
912	IPE240	Beam	No Messages	0.046322	PMM
913	IPE240	Beam	No Messages	0.115823	PMM
914	IPE240	Beam	No Messages	0.038853	PMM
915	IPE240	Beam	No Messages	0.09582	PMM
916	IPE240	Beam	No Messages	0.031029	PMM
917	IPE360	Beam	No Messages	0.119333	PMM
918	IPE360	Beam	No Messages	0.173232	PMM
919	IPE240	Beam	No Messages	0.083066	PMM
920	IPE240	Beam	No Messages	0.02243	PMM
921	IPE240	Beam	No Messages	0.082112	PMM
922	IPE240	Beam	No Messages	0.01277	PMM
923	IPE240	Beam	No Messages	0.082949	PMM
924	IPE240	Beam	No Messages	0.013145	PMM
925	IPE240	Beam	No Messages	0.080906	PMM
926	IPE240	Beam	No Messages	0.02608	PMM
927	IPE360	Beam	No Messages	0.108367	PMM
928	IPE360	Beam	No Messages	0.13884	PMM
929	IPE240	Beam	No Messages	0.083122	PMM
930	IPE240	Beam	No Messages	0.0184	PMM
931	IPE240	Beam	No Messages	0.082381	PMM
932	IPE240	Beam	No Messages	0.014791	PMM
933	IPE360	Beam	No Messages	0.107921	PMM
934	IPE360	Beam	No Messages	0.123651	PMM
935	IPE240	Beam	No Messages	0.084987	PMM
936	IPE240	Beam	No Messages	0.02207	PMM
937	IPE240	Beam	No Messages	0.087145	PMM
938	IPE240	Beam	No Messages	0.016834	PMM
939	IPE240	Beam	No Messages	0.090074	PMM
940	IPE240	Beam	No Messages	0.015863	PMM
941	IPE360	Beam	No Messages	0.132398	PMM
942	IPE360	Beam	No Messages	0.157193	PMM
943	IPE240	Beam	No Messages	0.109795	PMM
944	IPE240	Beam	No Messages	0.02804	PMM
945	IPE240	Beam	No Messages	0.120763	PMM
946	IPE240	Beam	No Messages	0.03508	PMM
947	IPE240	Beam	No Messages	0.1263	PMM
948	IPE240	Beam	No Messages	0.049364	PMM
949	IPE240	Beam	No Messages	0.11911	PMM
950	IPE240	Beam	No Messages	0.052149	PMM
951	IPE240	Beam	No Messages	0.086229	PMM
952	IPE240	Beam	No Messages	0.058744	PMM
953	IPE360	Beam	No Messages	0.08063	PMM
954	IPE360	Beam	No Messages	0.055234	PMM
955	IPE360	Beam	No Messages	0.05568	PMM
956	IPE360	Beam	No Messages	0.076351	PMM
957	IPE360	Beam	No Messages	0.140316	PMM
958	IPE360	Beam	No Messages	0.065131	PMM
959	IPE360	Beam	No Messages	0.063065	PMM
960	IPE360	Beam	No Messages	0.143683	PMM

Table 39: Steel Design 1 - Summary Data - AISC 360-10, Part 1 of 2

Frame	DesignSect	DesignType	Status	Ratio	RatioType
961	IPE240	Beam	No Messages	0.02051	PMM
962	IPE240	Beam	No Messages	0.032366	PMM
963	IPE240	Beam	No Messages	0.032385	PMM
964	IPE240	Beam	No Messages	0.030858	PMM
965	IPE240	Beam	No Messages	0.030936	PMM
966	IPE240	Beam	No Messages	0.008755	PMM
967	IPE240	Beam	No Messages	0.022108	PMM
968	IPE240	Beam	No Messages	0.040105	PMM
969	IPE240	Beam	No Messages	0.052221	PMM
970	IPE240	Beam	No Messages	0.052198	PMM
971	IPE240	Beam	No Messages	0.021801	PMM
972	IPE240	Beam	No Messages	0.011732	PMM
973	IPE240	Beam	No Messages	0.030444	PMM
974	IPE240	Beam	No Messages	0.010637	PMM
975	IPE360	Beam	No Messages	0.040659	PMM
976	IPE360	Beam	No Messages	0.092715	PMM
977	IPE360	Beam	No Messages	0.069041	PMM
978	IPE360	Beam	No Messages	0.073236	PMM
979	IPE300	Beam	No Messages	0.060079	PMM
980	IPE300	Beam	No Messages	0.028605	PMM
981	IPE300	Beam	No Messages	0.119763	PMM
982	IPE300	Beam	No Messages	0.045567	PMM
983	IPE240	Beam	No Messages	0.153569	PMM
984	IPE240	Beam	No Messages	0.063568	PMM
985	IPE300	Beam	No Messages	0.238971	PMM
986	IPE300	Beam	No Messages	0.110239	PMM
987	IPE240	Beam	No Messages	0.037269	PMM
988	IPE240	Beam	No Messages	0.037192	PMM
989	IPE300	Beam	No Messages	0.02007	PMM
990	IPE300	Beam	No Messages	0.014863	PMM
991	IPE240	Beam	No Messages	0.037058	PMM
992	IPE240	Beam	No Messages	0.036959	PMM
993	IPE240	Beam	No Messages	0.03738	PMM
994	IPE240	Beam	No Messages	0.010198	PMM
995	IPE240	Beam	No Messages	0.032663	PMM
996	IPE240	Beam	No Messages	0.006344	PMM
997	IPE240	Beam	No Messages	0.03141	PMM
998	IPE240	Beam	No Messages	0.014343	PMM
1000	IPE240	Beam	No Messages	0.026321	PMM
1001	IPE240	Beam	No Messages	0.028325	PMM
1002	IPE240	Beam	No Messages	0.028332	PMM
1005	IPE240	Beam	No Messages	0.029533	PMM
1006	IPE240	Beam	No Messages	0.034748	PMM
1007	IPE240	Beam	No Messages	0.034809	PMM
1012	IPE240	Beam	No Messages	0.017618	PMM
1013	IPE240	Beam	No Messages	0.015165	PMM
1014	IPE240	Beam	No Messages	0.015469	PMM
1015	IPE240	Beam	No Messages	0.016742	PMM
1016	IPE240	Beam	No Messages	0.009183	PMM
1017	IPE240	Beam	No Messages	0.010648	PMM
1018	IPE240	Beam	No Messages	0.010679	PMM
1020	IPE240	Beam	No Messages	0.022419	PMM
1021	IPE240	Beam	No Messages	0.010561	PMM
1022	IPE240	Beam	No Messages	0.009175	PMM

Table 39: Steel Design 1 - Summary Data - AISC 360-10, Part 1 of 2

Frame	DesignSect	DesignType	Status	Ratio	RatioType
1023	IPE240	Beam	No Messages	0.00919	PMM
1025	IPE240	Beam	No Messages	0.017067	PMM
1026	IPE240	Beam	No Messages	0.008184	PMM
1027	IPE240	Beam	No Messages	0.006132	PMM
1028	IPE240	Beam	No Messages	0.006148	PMM
1030	IPE240	Beam	No Messages	0.07027	PMM
1032	IPE240	Beam	No Messages	0.079652	PMM
1034	IPE240	Beam	No Messages	0.010857	PMM
1035	IPE240	Beam	No Messages	0.015769	PMM
1036	IPE240	Beam	No Messages	0.009243	PMM
1037	IPE240	Beam	No Messages	0.013465	PMM
1038	IPE240	Beam	No Messages	0.006131	PMM
1039	IPE240	Beam	No Messages	0.016287	PMM
1040	IPE240	Beam	No Messages	0.186669	PMM
1041	IPE240	Beam	No Messages	0.057013	PMM
1042	IPE240	Beam	No Messages	0.057003	PMM
1043	IPE240	Beam	No Messages	0.046067	PMM
1044	IPE240	Beam	No Messages	0.02278	PMM
1045	IPE360	Beam	No Messages	0.055771	PMM
1047	IPE240	Beam	No Messages	0.056425	PMM
1049	IPE240	Beam	No Messages	0.039295	PMM
1051	IPE240	Beam	No Messages	0.056153	PMM
1055	IPE240	Beam	No Messages	0.043828	PMM
1056	IPE240	Beam	No Messages	0.039087	PMM
1057	IPE240	Beam	No Messages	0.03889	PMM
1058	IPE240	Beam	No Messages	0.028608	PMM
1059	IPE240	Beam	No Messages	0.085423	PMM
1060	IPE360	Beam	No Messages	0.016728	PMM
1061	IPE360	Beam	No Messages	0.038246	PMM
1062	IPE240	Beam	No Messages	0.016923	PMM
1063	IPE240	Beam	No Messages	0.018946	PMM
1064	IPE240	Beam	No Messages	0.036947	PMM
1065	IPE240	Beam	No Messages	0.027601	PMM
1066	IPE240	Beam	No Messages	0.055955	PMM
1067	IPE240	Beam	No Messages	0.037645	PMM
1068	IPE240	Beam	No Messages	0.043053	PMM
1069	IPE240	Beam	No Messages	0.08646	PMM
1070	IPE240	Beam	No Messages	0.086363	PMM
1071	IPE240	Beam	No Messages	0.02329	PMM
1072	IPE240	Beam	No Messages	0.02033	PMM
1073	IPE240	Beam	No Messages	0.022453	PMM
1074	IPE360	Beam	No Messages	0.04015	PMM
1075	IPE360	Beam	No Messages	0.022052	PMM
1076	IPE360	Beam	No Messages	0.05698	PMM

Table 39: Steel Design 1 - Summary Data - AISC 360-10, Part 2 of 2

Table 39: Steel Design 1 - Summary Data - AISC 360-10, Part 2 of 2

Frame	Combo	Location	ErrMsg	WarnMsg
		m		
1	UDSTL7	0.	No Messages	No Messages
2	UDSTL8	0.	No Messages	No Messages
3	UDSTL8	0.	No Messages	No Messages

Table 39: Steel Design 1 - Summary Data - AISC 360-10, Part 2 of 2

Frame	Combo	Location	ErrMsg	WarnMsg
		m		
4	UDSTL8	0.	No Messages	No Messages
5	UDSTL8	0.	No Messages	No Messages
6	UDSTL8	0.	No Messages	No Messages
7	UDSTL7	0.	No Messages	No Messages
8	UDSTL8	0.	No Messages	No Messages
9	UDSTL8	0.	No Messages	No Messages
10	UDSTL7	0.	No Messages	No Messages
11	UDSTL7	0.	No Messages	No Messages
12	UDSTL8	0.	No Messages	No Messages
13	UDSTL8	0.	No Messages	No Messages
14	UDSTL8	0.	No Messages	No Messages
15	UDSTL8	0.	No Messages	No Messages
16	UDSTL8	0.	No Messages	No Messages
17	UDSTL7	0.	No Messages	No Messages
18	UDSTL7	0.	No Messages	No Messages
19	UDSTL7	0.	No Messages	No Messages
20	UDSTL7	0.	No Messages	No Messages
21	UDSTL8	0.	No Messages	No Messages
22	UDSTL7	0.	No Messages	No Messages
37	UDSTL8	0.	No Messages	No Messages
38	UDSTL2	0.88005	No Messages	No Messages
40	UDSTL2	0.935	No Messages	No Messages
41	UDSTL2	0.9	No Messages	No Messages
42	UDSTL2	0.	No Messages	No Messages
43	UDSTL2	0.	No Messages	No Messages
44	UDSTL2	0.9	No Messages	No Messages
45	UDSTL2	0.465	No Messages	No Messages
46	UDSTL2	0.	No Messages	No Messages
47	UDSTL2	0.	No Messages	No Messages
48	UDSTL2	0.9	No Messages	No Messages
49	UDSTL2	0.	No Messages	No Messages
50	UDSTL2	0.665	No Messages	No Messages
51	UDSTL2	0.	No Messages	No Messages
52	UDSTL2	0.45	No Messages	No Messages
53	UDSTL2	1.03508	No Messages	No Messages
54	UDSTL2	0.	No Messages	No Messages
55	UDSTL2	0.9	No Messages	No Messages
56	UDSTL2	0.	No Messages	No Messages
57	UDSTL2	0.865	No Messages	No Messages
58	UDSTL2	0.	No Messages	No Messages
59	UDSTL2	0.9	No Messages	No Messages
60	UDSTL2	0.9	No Messages	No Messages
61	UDSTL2	0.45	No Messages	No Messages
62	UDSTL2	0.	No Messages	No Messages
63	UDSTL2	0.	No Messages	No Messages
110	UDSTL8	0.	No Messages	No Messages
111	UDSTL7	0.9	No Messages	No Messages
112	UDSTL2	0.9	No Messages	No Messages
113	UDSTL2	0.	No Messages	No Messages
114	UDSTL7	0.9	No Messages	No Messages
115	UDSTL7	0.465	No Messages	No Messages
116	UDSTL8	0.	No Messages	No Messages
117	UDSTL8	0.	No Messages	No Messages
118	UDSTL7	0.	No Messages	No Messages

Table 39: Steel Design 1 - Summary Data - AISC 360-10, Part 2 of 2

Frame	Combo	Location	ErrMsg	WarnMsg
		m		
119	UDSTL7	0.9	No Messages	No Messages
120	UDSTL7	0.665	No Messages	No Messages
121	UDSTL8	0.	No Messages	No Messages
122	UDSTL8	0.9	No Messages	No Messages
123	UDSTL7	1.03508	No Messages	No Messages
124	UDSTL8	0.	No Messages	No Messages
125	UDSTL7	0.	No Messages	No Messages
126	UDSTL8	0.9	No Messages	No Messages
127	UDSTL7	0.865	No Messages	No Messages
128	UDSTL8	0.	No Messages	No Messages
129	UDSTL8	0.9	No Messages	No Messages
130	UDSTL2	0.9	No Messages	No Messages
131	UDSTL2	0.	No Messages	No Messages
132	UDSTL8	0.9	No Messages	No Messages
133	UDSTL8	0.615	No Messages	No Messages
134	UDSTL7	0.	No Messages	No Messages
135	UDSTL7	0.66477	No Messages	No Messages
136	UDSTL7	0.23523	No Messages	No Messages
137	UDSTL7	0.	No Messages	No Messages
138	UDSTL2	0.	No Messages	No Messages
139	UDSTL7	0.17152	No Messages	No Messages
140	UDSTL7	0.72848	No Messages	No Messages
141	UDSTL7	0.465	No Messages	No Messages
142	UDSTL7	0.	No Messages	No Messages
143	UDSTL7	0.	No Messages	No Messages
144	UDSTL2	0.17044	No Messages	No Messages
145	UDSTL2	0.72956	No Messages	No Messages
146	UDSTL2	0.	No Messages	No Messages
147	UDSTL7	0.55256	No Messages	No Messages
148	UDSTL7	0.665	No Messages	No Messages
149	UDSTL7	0.	No Messages	No Messages
150	UDSTL7	0.	No Messages	No Messages
151	UDSTL7	0.77068	No Messages	No Messages
152	UDSTL7	0.30632	No Messages	No Messages
153	UDSTL7	0.72876	No Messages	No Messages
154	UDSTL7	0.	No Messages	No Messages
155	UDSTL7	0.	No Messages	No Messages
156	UDSTL7	0.9	No Messages	No Messages
157	UDSTL7	0.865	No Messages	No Messages
158	UDSTL7	0.	No Messages	No Messages
159	UDSTL7	0.90001	No Messages	No Messages
160	UDSTL2	0.90001	No Messages	No Messages
161	UDSTL2	0.	No Messages	No Messages
162	UDSTL2	0.	No Messages	No Messages
163	UDSTL7	0.82866	No Messages	No Messages
164	UDSTL7	0.	No Messages	No Messages
165	UDSTL7	0.	No Messages	No Messages
166	UDSTL7	0.9	No Messages	No Messages
167	UDSTL7	1.07152	No Messages	No Messages
170	UDSTL7	0.	No Messages	No Messages
171	UDSTL7	0.66477	No Messages	No Messages
172	UDSTL7	0.	No Messages	No Messages
173	UDSTL7	0.9	No Messages	No Messages
174	UDSTL7	1.07152	No Messages	No Messages

Table 39: Steel Design 1 - Summary Data - AISC 360-10, Part 2 of 2

Frame	Combo	Location	ErrMsg	WarnMsg
		m		
183	UDSTL2	0.69154	No Messages	No Messages
184	UDSTL2	0.	No Messages	No Messages
185	UDSTL2	1.077	No Messages	No Messages
186	UDSTL2	0.77141	No Messages	No Messages
187	UDSTL2	0.	No Messages	No Messages
188	UDSTL2	0.71055	No Messages	No Messages
189	UDSTL2	1.077	No Messages	No Messages
190	UDSTL2	0.	No Messages	No Messages
191	UDSTL2	0.935	No Messages	No Messages
192	UDSTL2	0.9	No Messages	No Messages
193	UDSTL2	0.	No Messages	No Messages
194	UDSTL2	1.11082	No Messages	No Messages
195	UDSTL7	0.75923	No Messages	No Messages
208	UDSTL7	0.	No Messages	No Messages
209	UDSTL7	0.	No Messages	No Messages
210	UDSTL8	0.	No Messages	No Messages
211	UDSTL7	0.	No Messages	No Messages
212	UDSTL8	0.	No Messages	No Messages
213	UDSTL8	0.	No Messages	No Messages
214	UDSTL8	0.	No Messages	No Messages
215	UDSTL8	0.	No Messages	No Messages
216	UDSTL8	0.	No Messages	No Messages
217	UDSTL8	0.	No Messages	No Messages
218	UDSTL8	0.	No Messages	No Messages
219	UDSTL8	0.	No Messages	No Messages
220	UDSTL7	0.	No Messages	No Messages
221	UDSTL7	0.	No Messages	No Messages
222	UDSTL7	0.	No Messages	No Messages
223	UDSTL8	0.	No Messages	No Messages
224	UDSTL8	0.	No Messages	No Messages
225	UDSTL7	0.	No Messages	No Messages
226	UDSTL7	0.	No Messages	No Messages
227	UDSTL7	0.	No Messages	No Messages
228	UDSTL7	0.	No Messages	No Messages
229	UDSTL8	0.	No Messages	No Messages
230	UDSTL8	0.	No Messages	No Messages
231	UDSTL8	0.	No Messages	No Messages
243	UDSTL8	0.	No Messages	No Messages
244	UDSTL2	0.88005	No Messages	No Messages
246	UDSTL2	0.935	No Messages	No Messages
247	UDSTL2	0.9	No Messages	No Messages
248	UDSTL2	0.	No Messages	No Messages
249	UDSTL2	0.	No Messages	No Messages
250	UDSTL2	0.9	No Messages	No Messages
251	UDSTL2	0.465	No Messages	No Messages
252	UDSTL2	0.	No Messages	No Messages
253	UDSTL2	0.	No Messages	No Messages
254	UDSTL2	0.9	No Messages	No Messages
255	UDSTL2	0.	No Messages	No Messages
256	UDSTL2	0.665	No Messages	No Messages
257	UDSTL2	0.	No Messages	No Messages
258	UDSTL2	1.03508	No Messages	No Messages
259	UDSTL2	0.	No Messages	No Messages
260	UDSTL2	0.9	No Messages	No Messages

Table 39: Steel Design 1 - Summary Data - AISC 360-10, Part 2 of 2

Frame	Combo	Location	ErrMsg	WarnMsg
		m		
261	UDSTL2	0.	No Messages	No Messages
262	UDSTL2	0.865	No Messages	No Messages
263	UDSTL2	0.	No Messages	No Messages
264	UDSTL2	0.9	No Messages	No Messages
265	UDSTL2	0.9	No Messages	No Messages
266	UDSTL2	0.9	No Messages	No Messages
267	UDSTL2	0.	No Messages	No Messages
268	UDSTL2	0.	No Messages	No Messages
269	UDSTL2	2.52912	No Messages	No Messages
270	UDSTL2	2.52912	No Messages	No Messages
271	UDSTL2	2.52912	No Messages	No Messages
272	UDSTL2	2.52912	No Messages	No Messages
273	UDSTL2	2.52912	No Messages	No Messages
274	UDSTL8	0.	No Messages	No Messages
275	UDSTL2	2.52912	No Messages	No Messages
276	UDSTL2	2.52912	No Messages	No Messages
277	UDSTL2	2.52912	No Messages	No Messages
278	UDSTL2	2.52912	No Messages	No Messages
279	UDSTL8	0.	No Messages	No Messages
280	UDSTL2	2.52912	No Messages	No Messages
281	UDSTL2	2.52912	No Messages	No Messages
282	UDSTL8	0.	No Messages	No Messages
283	UDSTL2	2.52912	No Messages	No Messages
284	UDSTL2	2.52912	No Messages	No Messages
285	UDSTL2	2.52912	No Messages	No Messages
286	UDSTL2	2.52912	No Messages	No Messages
287	UDSTL2	2.52912	No Messages	No Messages
288	UDSTL2	2.52912	No Messages	No Messages
289	UDSTL2	2.52912	No Messages	No Messages
290	UDSTL2	2.52912	No Messages	No Messages
291	UDSTL2	2.52912	No Messages	No Messages
292	UDSTL2	0.	No Messages	No Messages
293	UDSTL2	0.	No Messages	No Messages
294	UDSTL2	0.	No Messages	No Messages
295	UDSTL2	0.	No Messages	No Messages
296	UDSTL2	0.	No Messages	No Messages
297	UDSTL8	2.51912	No Messages	No Messages
298	UDSTL2	0.	No Messages	No Messages
299	UDSTL2	0.	No Messages	No Messages
300	UDSTL2	0.	No Messages	No Messages
301	UDSTL2	0.	No Messages	No Messages
302	UDSTL2	0.	No Messages	No Messages
303	UDSTL2	0.	No Messages	No Messages
304	UDSTL2	0.	No Messages	No Messages
305	UDSTL2	0.	No Messages	No Messages
306	UDSTL2	0.	No Messages	No Messages
307	UDSTL2	0.	No Messages	No Messages
308	UDSTL2	0.	No Messages	No Messages
309	UDSTL2	2.51912	No Messages	No Messages
310	UDSTL2	0.	No Messages	No Messages
311	UDSTL2	0.	No Messages	No Messages
312	UDSTL2	0.	No Messages	No Messages
313	UDSTL2	0.	No Messages	No Messages
314	UDSTL2	0.	No Messages	No Messages

Table 39: Steel Design 1 - Summary Data - AISC 360-10, Part 2 of 2

Frame	Combo	Location	ErrMsg	WarnMsg
		m		
315	UDSTL7	0.	No Messages	No Messages
316	UDSTL2	0.9	No Messages	No Messages
317	UDSTL2	0.9	No Messages	No Messages
318	UDSTL2	0.	No Messages	No Messages
319	UDSTL7	0.9	No Messages	No Messages
320	UDSTL7	0.465	No Messages	No Messages
321	UDSTL7	0.	No Messages	No Messages
322	UDSTL7	0.	No Messages	No Messages
323	UDSTL7	0.9	No Messages	No Messages
324	UDSTL7	0.	No Messages	No Messages
325	UDSTL7	0.665	No Messages	No Messages
326	UDSTL7	0.	No Messages	No Messages
327	UDSTL7	0.	No Messages	No Messages
328	UDSTL7	1.03508	No Messages	No Messages
329	UDSTL7	0.	No Messages	No Messages
330	UDSTL2	0.9	No Messages	No Messages
331	UDSTL2	0.	No Messages	No Messages
332	UDSTL7	0.865	No Messages	No Messages
333	UDSTL7	0.	No Messages	No Messages
334	UDSTL2	0.9	No Messages	No Messages
335	UDSTL2	0.9	No Messages	No Messages
336	UDSTL2	0.	No Messages	No Messages
337	UDSTL7	0.9	No Messages	No Messages
338	UDSTL7	0.615	No Messages	No Messages
339	UDSTL7	0.	No Messages	No Messages
340	UDSTL7	0.66477	No Messages	No Messages
341	UDSTL2	0.23523	No Messages	No Messages
342	UDSTL2	0.	No Messages	No Messages
343	UDSTL2	0.	No Messages	No Messages
344	UDSTL2	0.17152	No Messages	No Messages
345	UDSTL7	0.72848	No Messages	No Messages
346	UDSTL7	0.465	No Messages	No Messages
347	UDSTL7	0.	No Messages	No Messages
348	UDSTL7	0.	No Messages	No Messages
349	UDSTL2	0.17044	No Messages	No Messages
350	UDSTL2	0.72956	No Messages	No Messages
351	UDSTL2	0.	No Messages	No Messages
352	UDSTL2	0.55256	No Messages	No Messages
353	UDSTL7	0.665	No Messages	No Messages
354	UDSTL7	0.	No Messages	No Messages
355	UDSTL2	0.12932	No Messages	No Messages
356	UDSTL2	0.	No Messages	No Messages
357	UDSTL7	0.	No Messages	No Messages
358	UDSTL7	0.72876	No Messages	No Messages
359	UDSTL7	0.	No Messages	No Messages
360	UDSTL2	0.9	No Messages	No Messages
361	UDSTL7	0.9	No Messages	No Messages
362	UDSTL7	0.865	No Messages	No Messages
363	UDSTL2	0.	No Messages	No Messages
364	UDSTL2	0.90001	No Messages	No Messages
365	UDSTL2	0.90001	No Messages	No Messages
366	UDSTL2	0.	No Messages	No Messages
367	UDSTL2	0.	No Messages	No Messages
368	UDSTL2	0.82866	No Messages	No Messages

Table 39: Steel Design 1 - Summary Data - AISC 360-10, Part 2 of 2

Frame	Combo	Location	ErrMsg	WarnMsg
		m		
369	UDSTL7	0.	No Messages	No Messages
370	UDSTL2	0.9	No Messages	No Messages
371	UDSTL2	0.	No Messages	No Messages
372	UDSTL7	1.07152	No Messages	No Messages
375	UDSTL7	0.	No Messages	No Messages
376	UDSTL2	0.66477	No Messages	No Messages
377	UDSTL2	0.23523	No Messages	No Messages
378	UDSTL2	0.	No Messages	No Messages
379	UDSTL7	1.07152	No Messages	No Messages
388	UDSTL2	0.69154	No Messages	No Messages
389	UDSTL2	0.	No Messages	No Messages
390	UDSTL2	0.	No Messages	No Messages
391	UDSTL2	0.77141	No Messages	No Messages
392	UDSTL2	0.	No Messages	No Messages
393	UDSTL2	0.71055	No Messages	No Messages
394	UDSTL2	1.077	No Messages	No Messages
395	UDSTL2	0.	No Messages	No Messages
396	UDSTL2	0.935	No Messages	No Messages
397	UDSTL2	0.	No Messages	No Messages
398	UDSTL2	0.	No Messages	No Messages
399	UDSTL2	1.11082	No Messages	No Messages
400	UDSTL7	0.58237	No Messages	No Messages
412	UDSTL8	3.75	No Messages	No Messages
413	UDSTL8	3.75	No Messages	No Messages
414	UDSTL8	3.75	No Messages	No Messages
415	UDSTL8	3.75	No Messages	No Messages
416	UDSTL7	0.	No Messages	No Messages
417	UDSTL8	3.75	No Messages	No Messages
418	UDSTL8	3.75	No Messages	No Messages
419	UDSTL8	0.	No Messages	No Messages
420	UDSTL2	0.	No Messages	No Messages
421	UDSTL8	0.	No Messages	No Messages
422	UDSTL2	0.	No Messages	No Messages
423	UDSTL8	0.	No Messages	No Messages
424	UDSTL8	0.	No Messages	No Messages
425	UDSTL8	0.	No Messages	No Messages
426	UDSTL2	3.75	No Messages	No Messages
427	UDSTL2	3.75	No Messages	No Messages
428	UDSTL2	3.75	No Messages	No Messages
429	UDSTL2	3.75	No Messages	No Messages
430	UDSTL8	0.	No Messages	No Messages
431	UDSTL8	3.75	No Messages	No Messages
432	UDSTL7	0.	No Messages	No Messages
433	UDSTL2	0.	No Messages	No Messages
434	UDSTL8	0.	No Messages	No Messages
435	UDSTL8	0.	No Messages	No Messages
436	UDSTL8	0.	No Messages	No Messages
437	UDSTL8	2.80828	No Messages	No Messages
438	UDSTL8	3.3491	No Messages	No Messages
439	UDSTL8	5.07773	No Messages	No Messages
440	UDSTL7	0.	No Messages	No Messages
441	UDSTL7	3.6	No Messages	No Messages
442	UDSTL7	0.	No Messages	No Messages
443	UDSTL7	0.	No Messages	No Messages

Table 39: Steel Design 1 - Summary Data - AISC 360-10, Part 2 of 2

Frame	Combo	Location	ErrMsg	WarnMsg
		m		
444	UDSTL7	5.	No Messages	No Messages
445	UDSTL8	0.	No Messages	No Messages
446	UDSTL7	0.	No Messages	No Messages
447	UDSTL7	3.8	No Messages	No Messages
448	UDSTL7	2.97016	No Messages	No Messages
449	UDSTL7	0.	No Messages	No Messages
450	UDSTL7	4.55578	No Messages	No Messages
451	UDSTL8	2.84936	No Messages	No Messages
452	UDSTL2	1.92284	No Messages	No Messages
454	UDSTL8	2.84769	No Messages	No Messages
455	UDSTL2	2.42537	No Messages	No Messages
456	UDSTL7	0.	No Messages	No Messages
457	UDSTL2	1.39742	No Messages	No Messages
458	UDSTL8	0.	No Messages	No Messages
459	UDSTL7	3.80652	No Messages	No Messages
460	UDSTL2	1.98633	No Messages	No Messages
461	UDSTL7	3.80652	No Messages	No Messages
462	UDSTL8	0.	No Messages	No Messages
463	UDSTL2	0.	No Messages	No Messages
464	UDSTL2	0.	No Messages	No Messages
465	UDSTL2	0.	No Messages	No Messages
466	UDSTL2	0.	No Messages	No Messages
467	UDSTL2	0.	No Messages	No Messages
468	UDSTL2	0.	No Messages	No Messages
469	UDSTL2	3.	No Messages	No Messages
470	UDSTL2	0.475	No Messages	No Messages
471	UDSTL2	2.97016	No Messages	No Messages
472	UDSTL2	0.	No Messages	No Messages
473	UDSTL2	1.87273	No Messages	No Messages
478	UDSTL8	0.	No Messages	No Messages
493	UDSTL8	1.25004	No Messages	No Messages
507	UDSTL7	0.	No Messages	No Messages
508	UDSTL7	0.87976	No Messages	No Messages
509	UDSTL7	0.	No Messages	No Messages
510	UDSTL7	0.77141	No Messages	No Messages
511	UDSTL7	0.68282	No Messages	No Messages
512	UDSTL7	0.	No Messages	No Messages
513	UDSTL7	0.	No Messages	No Messages
514	UDSTL7	1.077	No Messages	No Messages
515	UDSTL7	0.54384	No Messages	No Messages
516	UDSTL7	0.	No Messages	No Messages
517	UDSTL7	0.	No Messages	No Messages
518	UDSTL7	0.	No Messages	No Messages
519	UDSTL7	0.9	No Messages	No Messages
520	UDSTL7	1.44574	No Messages	No Messages
521	UDSTL7	0.	No Messages	No Messages
522	UDSTL7	0.90002	No Messages	No Messages
523	UDSTL7	0.90002	No Messages	No Messages
524	UDSTL7	0.90002	No Messages	No Messages
525	UDSTL7	1.04724	No Messages	No Messages
526	UDSTL7	0.	No Messages	No Messages
527	UDSTL2	0.9	No Messages	No Messages
528	UDSTL7	0.9	No Messages	No Messages
529	UDSTL7	0.	No Messages	No Messages

Table 39: Steel Design 1 - Summary Data - AISC 360-10, Part 2 of 2

Frame	Combo	Location	ErrMsg	WarnMsg
		m		
530	UDSTL7	0.82995	No Messages	No Messages
531	UDSTL8	0.	No Messages	No Messages
533	UDSTL8	0.	No Messages	No Messages
535	UDSTL8	0.	No Messages	No Messages
536	UDSTL8	2.52912	No Messages	No Messages
537	UDSTL7	0.	No Messages	No Messages
538	UDSTL2	0.87976	No Messages	No Messages
539	UDSTL2	0.	No Messages	No Messages
540	UDSTL2	0.	No Messages	No Messages
541	UDSTL7	0.68282	No Messages	No Messages
542	UDSTL7	0.	No Messages	No Messages
543	UDSTL7	0.	No Messages	No Messages
544	UDSTL7	1.077	No Messages	No Messages
545	UDSTL7	0.54384	No Messages	No Messages
546	UDSTL7	0.	No Messages	No Messages
547	UDSTL7	0.	No Messages	No Messages
548	UDSTL2	0.9	No Messages	No Messages
549	UDSTL7	0.9	No Messages	No Messages
550	UDSTL7	1.44574	No Messages	No Messages
551	UDSTL7	0.	No Messages	No Messages
552	UDSTL7	0.90002	No Messages	No Messages
553	UDSTL2	0.90002	No Messages	No Messages
554	UDSTL2	0.	No Messages	No Messages
555	UDSTL7	1.04724	No Messages	No Messages
556	UDSTL7	0.	No Messages	No Messages
557	UDSTL2	0.9	No Messages	No Messages
558	UDSTL2	0.45	No Messages	No Messages
559	UDSTL2	0.	No Messages	No Messages
561	UDSTL8	0.	No Messages	No Messages
562	UDSTL8	1.61029	No Messages	No Messages
563	UDSTL2	0.	No Messages	No Messages
565	UDSTL7	0.	No Messages	No Messages
566	UDSTL7	0.20062	No Messages	No Messages
567	UDSTL2	1.18005	No Messages	No Messages
569	UDSTL2	1.18005	No Messages	No Messages
571	UDSTL2	1.18005	No Messages	No Messages
573	UDSTL2	1.18005	No Messages	No Messages
575	UDSTL2	0.88005	No Messages	No Messages
577	UDSTL2	1.17005	No Messages	No Messages
579	UDSTL2	0.88005	No Messages	No Messages
581	UDSTL2	0.88005	No Messages	No Messages
583	UDSTL2	0.88005	No Messages	No Messages
585	UDSTL2	0.88005	No Messages	No Messages
587	UDSTL2	1.18005	No Messages	No Messages
589	UDSTL2	1.18005	No Messages	No Messages
591	UDSTL2	1.18005	No Messages	No Messages
593	UDSTL2	1.18005	No Messages	No Messages
595	UDSTL2	0.88005	No Messages	No Messages
599	UDSTL2	0.88005	No Messages	No Messages
601	UDSTL2	0.88005	No Messages	No Messages
603	UDSTL2	0.88005	No Messages	No Messages
605	UDSTL2	0.88005	No Messages	No Messages
607	UDSTL7	0.	No Messages	No Messages
608	UDSTL7	4.15803	No Messages	No Messages

Table 39: Steel Design 1 - Summary Data - AISC 360-10, Part 2 of 2

Frame	Combo	Location	ErrMsg	WarnMsg
		m		
610	UDSTL2	0.88005	No Messages	No Messages
613	UDSTL2	0.89977	No Messages	No Messages
614	UDSTL2	0.	No Messages	No Messages
615	UDSTL2	0.	No Messages	No Messages
616	UDSTL2	0.	No Messages	No Messages
617	UDSTL8	0.	No Messages	No Messages
618	UDSTL8	2.19401	No Messages	No Messages
619	UDSTL2	0.	No Messages	No Messages
620	UDSTL7	0.	No Messages	No Messages
621	UDSTL2	0.	No Messages	No Messages
622	UDSTL2	1.09631	No Messages	No Messages
623	UDSTL2	0.	No Messages	No Messages
624	UDSTL2	0.	No Messages	No Messages
625	UDSTL2	0.	No Messages	No Messages
626	UDSTL7	2.19118	No Messages	No Messages
627	UDSTL2	0.53017	No Messages	No Messages
628	UDSTL2	1.05923	No Messages	No Messages
629	UDSTL7	0.	No Messages	No Messages
630	UDSTL7	0.52995	No Messages	No Messages
631	UDSTL7	0.3	No Messages	No Messages
475	UDSTL2	0.935	No Messages	No Messages
476	UDSTL2	0.9	No Messages	No Messages
477	UDSTL2	0.	No Messages	No Messages
479	UDSTL2	0.	No Messages	No Messages
480	UDSTL2	0.9	No Messages	No Messages
481	UDSTL2	0.465	No Messages	No Messages
482	UDSTL2	0.	No Messages	No Messages
483	UDSTL2	0.	No Messages	No Messages
484	UDSTL2	0.9	No Messages	No Messages
489	UDSTL2	0.	No Messages	No Messages
490	UDSTL8	0.665	No Messages	No Messages
491	UDSTL8	0.	No Messages	No Messages
492	UDSTL2	1.03508	No Messages	No Messages
494	UDSTL2	0.	No Messages	No Messages
495	UDSTL2	0.9	No Messages	No Messages
496	UDSTL2	0.	No Messages	No Messages
497	UDSTL2	0.865	No Messages	No Messages
498	UDSTL2	0.	No Messages	No Messages
499	UDSTL2	0.9	No Messages	No Messages
504	UDSTL2	0.9	No Messages	No Messages
560	UDSTL2	0.	No Messages	No Messages
597	UDSTL2	0.	No Messages	No Messages
611	UDSTL8	0.45	No Messages	No Messages
612	UDSTL2	0.935	No Messages	No Messages
632	UDSTL2	0.9	No Messages	No Messages
633	UDSTL2	0.	No Messages	No Messages
634	UDSTL2	0.	No Messages	No Messages
635	UDSTL2	0.9	No Messages	No Messages
636	UDSTL2	0.465	No Messages	No Messages
637	UDSTL2	0.	No Messages	No Messages
638	UDSTL2	0.	No Messages	No Messages
639	UDSTL2	0.9	No Messages	No Messages
640	UDSTL2	0.	No Messages	No Messages
641	UDSTL8	0.665	No Messages	No Messages

Table 39: Steel Design 1 - Summary Data - AISC 360-10, Part 2 of 2

Frame	Combo	Location	ErrMsg	WarnMsg
		m		
642	UDSTL8	0.	No Messages	No Messages
643	UDSTL8	1.03508	No Messages	No Messages
644	UDSTL8	0.	No Messages	No Messages
645	UDSTL2	0.9	No Messages	No Messages
646	UDSTL2	0.	No Messages	No Messages
647	UDSTL2	0.865	No Messages	No Messages
648	UDSTL2	0.	No Messages	No Messages
649	UDSTL2	0.9	No Messages	No Messages
650	UDSTL2	0.9	No Messages	No Messages
651	UDSTL2	0.	No Messages	No Messages
652	UDSTL2	0.	No Messages	No Messages
654	UDSTL2	0.	No Messages	No Messages
233	UDSTL2	0.8	No Messages	No Messages
234	UDSTL2	0.	No Messages	No Messages
240	UDSTL2	0.69688	No Messages	No Messages
241	UDSTL2	0.	No Messages	No Messages
500	UDSTL7	0.82859	No Messages	No Messages
501	UDSTL2	0.89991	No Messages	No Messages
502	UDSTL2	0.	No Messages	No Messages
503	UDSTL2	0.	No Messages	No Messages
655	UDSTL7	0.	No Messages	No Messages
662	UDSTL8	0.	No Messages	No Messages
663	UDSTL2	0.935	No Messages	No Messages
664	UDSTL2	0.9	No Messages	No Messages
665	UDSTL2	0.	No Messages	No Messages
666	UDSTL2	0.	No Messages	No Messages
673	UDSTL2	0.9	No Messages	No Messages
674	UDSTL2	0.	No Messages	No Messages
675	UDSTL2	0.	No Messages	No Messages
676	UDSTL2	0.	No Messages	No Messages
677	UDSTL2	0.9	No Messages	No Messages
678	UDSTL2	0.	No Messages	No Messages
679	UDSTL2	0.	No Messages	No Messages
680	UDSTL2	0.	No Messages	No Messages
681	UDSTL8	0.	No Messages	No Messages
682	UDSTL8	0.31734	No Messages	No Messages
683	UDSTL8	0.	No Messages	No Messages
684	UDSTL8	1.11736	No Messages	No Messages
685	UDSTL8	0.	No Messages	No Messages
686	UDSTL8	0.	No Messages	No Messages
687	UDSTL8	0.	No Messages	No Messages
688	UDSTL8	1.11731	No Messages	No Messages
689	UDSTL8	1.11733	No Messages	No Messages
690	UDSTL2	1.11733	No Messages	No Messages
691	UDSTL2	0.	No Messages	No Messages
692	UDSTL8	0.	No Messages	No Messages
693	UDSTL2	1.11732	No Messages	No Messages
694	UDSTL2	1.11732	No Messages	No Messages
695	UDSTL2	0.	No Messages	No Messages
696	UDSTL2	0.	No Messages	No Messages
697	UDSTL2	1.11731	No Messages	No Messages
698	UDSTL2	1.11733	No Messages	No Messages
699	UDSTL2	0.	No Messages	No Messages
700	UDSTL2	0.	No Messages	No Messages

Table 39: Steel Design 1 - Summary Data - AISC 360-10, Part 2 of 2

Frame	Combo	Location	ErrMsg	WarnMsg
		m		
701	UDSTL2	0.	No Messages	No Messages
702	UDSTL2	0.	No Messages	No Messages
703	UDSTL8	0.	No Messages	No Messages
704	UDSTL2	1.27927	No Messages	No Messages
705	UDSTL2	0.	No Messages	No Messages
706	UDSTL8	1.32785	No Messages	No Messages
709	UDSTL7	0.	No Messages	No Messages
710	UDSTL7	0.	No Messages	No Messages
711	UDSTL2	0.	No Messages	No Messages
712	UDSTL7	0.	No Messages	No Messages
713	UDSTL2	0.	No Messages	No Messages
714	UDSTL7	0.	No Messages	No Messages
715	UDSTL2	0.	No Messages	No Messages
716	UDSTL7	0.	No Messages	No Messages
717	UDSTL7	0.90002	No Messages	No Messages
718	UDSTL2	0.45001	No Messages	No Messages
719	UDSTL8	0.	No Messages	No Messages
720	UDSTL8	0.	No Messages	No Messages
721	UDSTL8	1.02937	No Messages	No Messages
722	UDSTL8	0.	No Messages	No Messages
723	UDSTL8	0.93995	No Messages	No Messages
724	UDSTL10	0.92295	No Messages	No Messages
725	UDSTL7	0.	No Messages	No Messages
726	UDSTL7	0.94	No Messages	No Messages
727	UDSTL7	0.	No Messages	No Messages
728	UDSTL7	0.9406	No Messages	No Messages
729	UDSTL2	0.	No Messages	No Messages
730	UDSTL7	0.	No Messages	No Messages
731	UDSTL7	0.94713	No Messages	No Messages
732	UDSTL2	0.	No Messages	No Messages
733	UDSTL7	0.	No Messages	No Messages
734	UDSTL7	0.	No Messages	No Messages
735	UDSTL7	0.94008	No Messages	No Messages
736	UDSTL7	0.	No Messages	No Messages
737	UDSTL2	0.77141	No Messages	No Messages
738	UDSTL2	0.	No Messages	No Messages
739	UDSTL2	0.	No Messages	No Messages
740	UDSTL8	0.	No Messages	No Messages
741	UDSTL2	0.9	No Messages	No Messages
742	UDSTL2	0.	No Messages	No Messages
743	UDSTL2	0.	No Messages	No Messages
744	UDSTL2	0.72844	No Messages	No Messages
745	UDSTL2	0.93516	No Messages	No Messages
746	UDSTL2	0.89984	No Messages	No Messages
747	UDSTL2	0.	No Messages	No Messages
749	UDSTL2	0.	No Messages	No Messages
750	UDSTL9	0.	No Messages	No Messages
751	UDSTL2	0.	No Messages	No Messages
752	UDSTL8	0.82132	No Messages	No Messages
753	UDSTL2	0.	No Messages	No Messages
754	UDSTL2	0.	No Messages	No Messages
755	UDSTL2	0.	No Messages	No Messages
756	UDSTL2	0.	No Messages	No Messages
757	UDSTL2	0.	No Messages	No Messages

Table 39: Steel Design 1 - Summary Data - AISC 360-10, Part 2 of 2

Frame	Combo	Location	ErrMsg	WarnMsg
		m		
758	UDSTL2	0.	No Messages	No Messages
759	UDSTL2	0.	No Messages	No Messages
760	UDSTL2	0.	No Messages	No Messages
761	UDSTL2	0.	No Messages	No Messages
762	UDSTL2	0.	No Messages	No Messages
763	UDSTL2	0.	No Messages	No Messages
764	UDSTL2	0.	No Messages	No Messages
765	UDSTL2	0.	No Messages	No Messages
766	UDSTL2	0.	No Messages	No Messages
767	UDSTL2	0.	No Messages	No Messages
768	UDSTL9	0.	No Messages	No Messages
769	UDSTL2	0.	No Messages	No Messages
770	UDSTL7	0.	No Messages	No Messages
771	UDSTL2	0.	No Messages	No Messages
772	UDSTL7	0.	No Messages	No Messages
773	UDSTL7	0.	No Messages	No Messages
775	UDSTL8	0.935	No Messages	No Messages
776	UDSTL8	0.9	No Messages	No Messages
777	UDSTL8	0.	No Messages	No Messages
778	UDSTL8	0.	No Messages	No Messages
779	UDSTL2	0.935	No Messages	No Messages
780	UDSTL2	0.9	No Messages	No Messages
781	UDSTL2	0.	No Messages	No Messages
782	UDSTL2	0.	No Messages	No Messages
783	UDSTL8	0.935	No Messages	No Messages
784	UDSTL2	0.9	No Messages	No Messages
785	UDSTL2	0.	No Messages	No Messages
786	UDSTL2	0.	No Messages	No Messages
787	UDSTL8	0.	No Messages	No Messages
788	UDSTL8	0.	No Messages	No Messages
789	UDSTL2	0.	No Messages	No Messages
790	UDSTL8	1.06533	No Messages	No Messages
791	UDSTL8	1.16935	No Messages	No Messages
792	UDSTL8	0.	No Messages	No Messages
793	UDSTL8	0.36849	No Messages	No Messages
794	UDSTL8	0.69688	No Messages	No Messages
795	UDSTL8	0.03462	No Messages	No Messages
796	UDSTL8	1.1	No Messages	No Messages
797	UDSTL8	1.1	No Messages	No Messages
798	UDSTL8	1.1	No Messages	No Messages
799	UDSTL2	1.1	No Messages	No Messages
800	UDSTL2	0.03466	No Messages	No Messages
801	UDSTL2	0.	No Messages	No Messages
802	UDSTL8	0.	No Messages	No Messages
803	UDSTL2	1.1	No Messages	No Messages
804	UDSTL2	1.1	No Messages	No Messages
805	UDSTL2	0.03465	No Messages	No Messages
806	UDSTL2	0.	No Messages	No Messages
807	UDSTL2	0.	No Messages	No Messages
808	UDSTL7	1.1	No Messages	No Messages
809	UDSTL2	1.1	No Messages	No Messages
810	UDSTL2	0.03464	No Messages	No Messages
811	UDSTL2	0.	No Messages	No Messages
812	UDSTL7	0.	No Messages	No Messages

Table 39: Steel Design 1 - Summary Data - AISC 360-10, Part 2 of 2

Frame	Combo	Location	ErrMsg	WarnMsg
		m		
813	UDSTL2	0.9	No Messages	No Messages
814	UDSTL2	0.	No Messages	No Messages
815	UDSTL2	0.	No Messages	No Messages
816	UDSTL2	0.9	No Messages	No Messages
817	UDSTL2	0.465	No Messages	No Messages
818	UDSTL2	0.	No Messages	No Messages
819	UDSTL2	0.	No Messages	No Messages
820	UDSTL8	0.9	No Messages	No Messages
821	UDSTL8	0.	No Messages	No Messages
822	UDSTL8	0.665	No Messages	No Messages
823	UDSTL8	0.	No Messages	No Messages
824	UDSTL8	0.9	No Messages	No Messages
825	UDSTL8	1.03531	No Messages	No Messages
826	UDSTL8	0.	No Messages	No Messages
827	UDSTL8	0.90023	No Messages	No Messages
828	UDSTL8	0.	No Messages	No Messages
829	UDSTL2	0.865	No Messages	No Messages
830	UDSTL2	0.	No Messages	No Messages
831	UDSTL2	0.9	No Messages	No Messages
832	UDSTL2	0.9	No Messages	No Messages
833	UDSTL2	0.	No Messages	No Messages
834	UDSTL2	0.	No Messages	No Messages
835	UDSTL7	0.	No Messages	No Messages
836	UDSTL8	0.	No Messages	No Messages
837	UDSTL8	0.89977	No Messages	No Messages
838	UDSTL8	0.	No Messages	No Messages
839	UDSTL2	0.	No Messages	No Messages
840	UDSTL8	0.90023	No Messages	No Messages
841	UDSTL8	0.465	No Messages	No Messages
842	UDSTL8	0.	No Messages	No Messages
843	UDSTL2	0.	No Messages	No Messages
844	UDSTL8	0.89977	No Messages	No Messages
845	UDSTL8	0.	No Messages	No Messages
846	UDSTL8	0.665	No Messages	No Messages
847	UDSTL8	0.	No Messages	No Messages
848	UDSTL8	0.	No Messages	No Messages
849	UDSTL8	1.03508	No Messages	No Messages
850	UDSTL8	0.	No Messages	No Messages
851	UDSTL8	0.9	No Messages	No Messages
852	UDSTL8	0.	No Messages	No Messages
853	UDSTL2	0.865	No Messages	No Messages
854	UDSTL2	0.	No Messages	No Messages
855	UDSTL2	0.9	No Messages	No Messages
856	UDSTL2	0.9	No Messages	No Messages
857	UDSTL2	0.	No Messages	No Messages
858	UDSTL2	0.	No Messages	No Messages
859	UDSTL8	0.	No Messages	No Messages
860	UDSTL8	0.	No Messages	No Messages
861	UDSTL8	1.26456	No Messages	No Messages
862	UDSTL2	1.26456	No Messages	No Messages
863	UDSTL2	1.26457	No Messages	No Messages
864	UDSTL2	1.26455	No Messages	No Messages
865	UDSTL2	1.26457	No Messages	No Messages
866	UDSTL2	1.26455	No Messages	No Messages

Table 39: Steel Design 1 - Summary Data - AISC 360-10, Part 2 of 2

Frame	Combo	Location	ErrMsg	WarnMsg
		m		
867	UDSTL2	1.26457	No Messages	No Messages
868	UDSTL2	1.26455	No Messages	No Messages
869	UDSTL8	1.26456	No Messages	No Messages
870	UDSTL2	1.26456	No Messages	No Messages
871	UDSTL8	0.	No Messages	No Messages
872	UDSTL2	1.26456	No Messages	No Messages
873	UDSTL8	1.26457	No Messages	No Messages
874	UDSTL2	1.26455	No Messages	No Messages
875	UDSTL8	1.26456	No Messages	No Messages
876	UDSTL2	1.26456	No Messages	No Messages
877	UDSTL8	1.26457	No Messages	No Messages
878	UDSTL2	1.26455	No Messages	No Messages
879	UDSTL8	1.26457	No Messages	No Messages
880	UDSTL2	1.26455	No Messages	No Messages
881	UDSTL8	0.	No Messages	No Messages
882	UDSTL2	1.26455	No Messages	No Messages
883	UDSTL8	1.26457	No Messages	No Messages
884	UDSTL2	1.26455	No Messages	No Messages
885	UDSTL8	1.26457	No Messages	No Messages
886	UDSTL2	1.26455	No Messages	No Messages
887	UDSTL8	0.	No Messages	No Messages
888	UDSTL2	1.26456	No Messages	No Messages
889	UDSTL8	1.26456	No Messages	No Messages
890	UDSTL2	1.26456	No Messages	No Messages
891	UDSTL8	1.26456	No Messages	No Messages
892	UDSTL2	1.26456	No Messages	No Messages
893	UDSTL8	1.26456	No Messages	No Messages
894	UDSTL2	1.26456	No Messages	No Messages
895	UDSTL8	0.	No Messages	No Messages
896	UDSTL2	1.26456	No Messages	No Messages
897	UDSTL8	1.26456	No Messages	No Messages
898	UDSTL2	1.26456	No Messages	No Messages
899	UDSTL2	1.26456	No Messages	No Messages
900	UDSTL2	1.26456	No Messages	No Messages
901	UDSTL2	1.26456	No Messages	No Messages
902	UDSTL2	1.26456	No Messages	No Messages
903	UDSTL2	1.26456	No Messages	No Messages
904	UDSTL2	1.26456	No Messages	No Messages
905	UDSTL8	1.26456	No Messages	No Messages
906	UDSTL2	1.26456	No Messages	No Messages
907	UDSTL2	0.	No Messages	No Messages
908	UDSTL8	0.	No Messages	No Messages
909	UDSTL2	0.	No Messages	No Messages
910	UDSTL2	0.	No Messages	No Messages
911	UDSTL2	0.	No Messages	No Messages
912	UDSTL2	0.	No Messages	No Messages
913	UDSTL2	0.	No Messages	No Messages
914	UDSTL2	0.	No Messages	No Messages
915	UDSTL2	0.	No Messages	No Messages
916	UDSTL8	0.	No Messages	No Messages
917	UDSTL2	0.	No Messages	No Messages
918	UDSTL8	1.25956	No Messages	No Messages
919	UDSTL2	0.	No Messages	No Messages
920	UDSTL8	0.	No Messages	No Messages

Table 39: Steel Design 1 - Summary Data - AISC 360-10, Part 2 of 2

Frame	Combo	Location	ErrMsg	WarnMsg
		m		
921	UDSTL2	0.	No Messages	No Messages
922	UDSTL7	0.	No Messages	No Messages
923	UDSTL2	0.	No Messages	No Messages
924	UDSTL8	0.	No Messages	No Messages
925	UDSTL2	0.	No Messages	No Messages
926	UDSTL8	0.	No Messages	No Messages
927	UDSTL2	0.	No Messages	No Messages
928	UDSTL8	1.25956	No Messages	No Messages
929	UDSTL2	0.	No Messages	No Messages
930	UDSTL8	0.	No Messages	No Messages
931	UDSTL2	0.	No Messages	No Messages
932	UDSTL8	0.	No Messages	No Messages
933	UDSTL2	0.	No Messages	No Messages
934	UDSTL8	1.25961	No Messages	No Messages
935	UDSTL2	0.	No Messages	No Messages
936	UDSTL8	0.	No Messages	No Messages
937	UDSTL2	0.	No Messages	No Messages
938	UDSTL8	0.	No Messages	No Messages
939	UDSTL2	0.	No Messages	No Messages
940	UDSTL7	0.	No Messages	No Messages
941	UDSTL2	0.	No Messages	No Messages
942	UDSTL8	1.25953	No Messages	No Messages
943	UDSTL2	0.	No Messages	No Messages
944	UDSTL7	0.	No Messages	No Messages
945	UDSTL2	0.	No Messages	No Messages
946	UDSTL2	0.	No Messages	No Messages
947	UDSTL2	0.	No Messages	No Messages
948	UDSTL2	1.2657	No Messages	No Messages
949	UDSTL2	0.	No Messages	No Messages
950	UDSTL2	1.27006	No Messages	No Messages
951	UDSTL2	0.	No Messages	No Messages
952	UDSTL7	1.26992	No Messages	No Messages
953	UDSTL8	0.	No Messages	No Messages
954	UDSTL2	1.2938	No Messages	No Messages
955	UDSTL2	0.	No Messages	No Messages
956	UDSTL8	1.3117	No Messages	No Messages
957	UDSTL8	0.	No Messages	No Messages
958	UDSTL8	0.	No Messages	No Messages
959	UDSTL8	1.26456	No Messages	No Messages
960	UDSTL8	1.26456	No Messages	No Messages
961	UDSTL7	0.87969	No Messages	No Messages
962	UDSTL2	1.07703	No Messages	No Messages
963	UDSTL2	0.	No Messages	No Messages
964	UDSTL2	0.90016	No Messages	No Messages
965	UDSTL2	0.	No Messages	No Messages
966	UDSTL7	1.07672	No Messages	No Messages
967	UDSTL2	0.72915	No Messages	No Messages
968	UDSTL2	0.93476	No Messages	No Messages
969	UDSTL2	0.90024	No Messages	No Messages
970	UDSTL2	0.	No Messages	No Messages
971	UDSTL7	0.	No Messages	No Messages
972	UDSTL8	0.	No Messages	No Messages
973	UDSTL2	0.	No Messages	No Messages
974	UDSTL8	0.	No Messages	No Messages

Table 39: Steel Design 1 - Summary Data - AISC 360-10, Part 2 of 2

Frame	Combo	Location	ErrMsg	WarnMsg
		m		
975	UDSTL8	0.80505	No Messages	No Messages
976	UDSTL8	0.80524	No Messages	No Messages
977	UDSTL7	0.	No Messages	No Messages
978	UDSTL8	0.82131	No Messages	No Messages
979	UDSTL2	0.	No Messages	No Messages
980	UDSTL2	0.	No Messages	No Messages
981	UDSTL2	0.	No Messages	No Messages
982	UDSTL2	0.	No Messages	No Messages
983	UDSTL2	0.	No Messages	No Messages
984	UDSTL2	0.	No Messages	No Messages
985	UDSTL2	0.	No Messages	No Messages
986	UDSTL2	0.	No Messages	No Messages
987	UDSTL2	0.8037	No Messages	No Messages
988	UDSTL2	0.	No Messages	No Messages
989	UDSTL2	0.	No Messages	No Messages
990	UDSTL2	0.	No Messages	No Messages
991	UDSTL2	0.8037	No Messages	No Messages
992	UDSTL2	0.	No Messages	No Messages
993	UDSTL2	0.	No Messages	No Messages
994	UDSTL7	0.	No Messages	No Messages
995	UDSTL2	0.	No Messages	No Messages
996	UDSTL9	0.	No Messages	No Messages
997	UDSTL2	0.	No Messages	No Messages
998	UDSTL7	0.	No Messages	No Messages
1000	UDSTL8	0.90002	No Messages	No Messages
1001	UDSTL7	0.90002	No Messages	No Messages
1002	UDSTL7	0.	No Messages	No Messages
1005	UDSTL2	0.90002	No Messages	No Messages
1006	UDSTL7	0.90002	No Messages	No Messages
1007	UDSTL7	0.	No Messages	No Messages
1012	UDSTL7	0.	No Messages	No Messages
1013	UDSTL7	0.94	No Messages	No Messages
1014	UDSTL7	0.	No Messages	No Messages
1015	UDSTL7	0.	No Messages	No Messages
1016	UDSTL7	0.00581	No Messages	No Messages
1017	UDSTL7	0.93419	No Messages	No Messages
1018	UDSTL7	0.00581	No Messages	No Messages
1020	UDSTL2	0.	No Messages	No Messages
1021	UDSTL2	0.00584	No Messages	No Messages
1022	UDSTL7	0.93417	No Messages	No Messages
1023	UDSTL7	0.00584	No Messages	No Messages
1025	UDSTL2	0.	No Messages	No Messages
1026	UDSTL2	0.00578	No Messages	No Messages
1027	UDSTL2	0.93423	No Messages	No Messages
1028	UDSTL2	0.00578	No Messages	No Messages
1030	UDSTL7	0.97532	No Messages	No Messages
1032	UDSTL7	0.90339	No Messages	No Messages
1034	UDSTL7	0.	No Messages	No Messages
1035	UDSTL7	0.00581	No Messages	No Messages
1036	UDSTL7	0.	No Messages	No Messages
1037	UDSTL2	0.00584	No Messages	No Messages
1038	UDSTL2	0.	No Messages	No Messages
1039	UDSTL8	0.	No Messages	No Messages
1040	UDSTL7	0.	No Messages	No Messages

Table 39: Steel Design 1 - Summary Data - AISC 360-10, Part 2 of 2

Frame	Combo	Location	ErrMsg	WarnMsg
		m		
1041	UDSTL2	0.9	No Messages	No Messages
1042	UDSTL2	0.	No Messages	No Messages
1043	UDSTL7	0.	No Messages	No Messages
1044	UDSTL7	0.	No Messages	No Messages
1045	UDSTL8	0.	No Messages	No Messages
1047	UDSTL7	0.	No Messages	No Messages
1049	UDSTL7	0.	No Messages	No Messages
1051	UDSTL2	1.16755	No Messages	No Messages
1055	UDSTL7	0.	No Messages	No Messages
1056	UDSTL7	0.	No Messages	No Messages
1057	UDSTL2	0.	No Messages	No Messages
1058	UDSTL7	0.	No Messages	No Messages
1059	UDSTL7	0.83	No Messages	No Messages
1060	UDSTL8	0.	No Messages	No Messages
1061	UDSTL8	1.09714	No Messages	No Messages
1062	UDSTL7	0.	No Messages	No Messages
1063	UDSTL7	1.09669	No Messages	No Messages
1064	UDSTL2	0.	No Messages	No Messages
1065	UDSTL7	0.	No Messages	No Messages
1066	UDSTL2	0.	No Messages	No Messages
1067	UDSTL2	0.	No Messages	No Messages
1068	UDSTL2	0.72342	No Messages	No Messages
1069	UDSTL2	0.44808	No Messages	No Messages
1070	UDSTL2	0.	No Messages	No Messages
1071	UDSTL2	0.	No Messages	No Messages
1072	UDSTL8	0.	No Messages	No Messages
1073	UDSTL7	0.	No Messages	No Messages
1074	UDSTL8	0.	No Messages	No Messages
1075	UDSTL8	0.93997	No Messages	No Messages
1076	UDSTL8	0.92896	No Messages	No Messages

Datos del proyecto

Nombre del proyecto	CONEXION COLUMA A PEDESTAL
Número del Proyecto	
Autor	ALVARO CABALLERO
Descripción	UNION COL W12X106
Fecha	
Normativa de cálculo	AISC 360-16

Material

Acero	A572 Gr.50
Hormigón	4000 psi

Ítem del proyecto CON1

Diseño

Nombre	CON1
Descripción	
Análisis	Tensión, deformación/ Carga simplificada
Normativa de cálculo	AISC - LRFD

Elementos estructurales

Nombre	Sección transversal	β – Dirección [°]	γ - Inclinación [°]	α - Rotación [°]	Desplazamiento ex [mm]	Desplazamiento ey [mm]	Desplazamiento ez [mm]	Fuerzas en
COL	1 - W12x106(W(Imp)12X106)	0.0	-90.0	0.0	0	0	0	Nudo

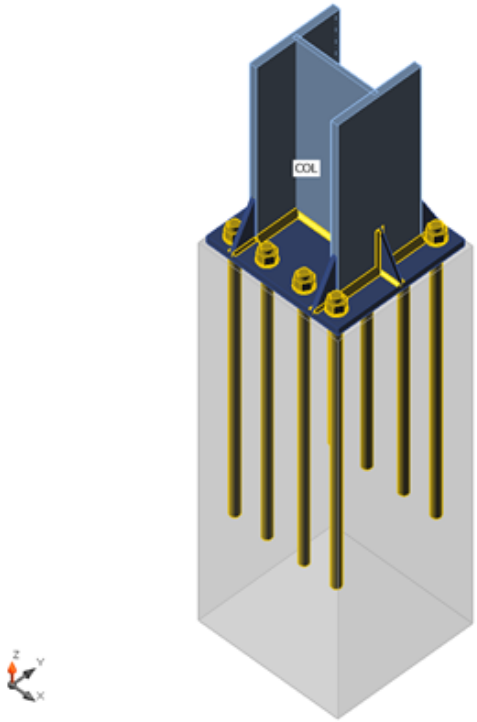

Secciones

Nombre	Material
1 - W12x106(W(Imp)12X106)	A572 Gr.50

Anclajes

Nombre	Conjunto de tornillo	Diámetro [mm]	fu [MPa]	Área bruta [mm^2]
1 1/4 A325	1 1/4 A325	32	725.0	792

Cargas (No se requiere el equilibro)

Nombre	Elemento	N [kN]	Vy [kN]	Vz [kN]	Mx [kNm]	My [kNm]	Mz [kNm]
LE1	COL	-300.0	0.0	0.0	0.0	10.0	8.0

Bloque de la cimentación

Ítem	Valor	Unidad
CB 1		
Dimensiones	500 x 517	mm
Profundidad	1400	mm
Anclaje	1 1/4 A325	
Longitud del anclaje	1000	mm
Transferencia de la fuerza cortante	Fricción	

Verificación

Resumen

Nombre	Valor	Estado de la verificación
Análisis	100.0%	Aceptar
Placas	0.0 < 5%	Aceptar
Anclajes	0.0 < 100%	Aceptar
Soldaduras	14.8 < 100%	Aceptar
Bloque de hormigón	8.3 < 100%	Aceptar
Cortante	0.0 < 100%	Aceptar
Pandeo	No calculado	

Placas

Nombre	F_y [MPa]	Espesor [mm]	Cargas	σ_{Ed} [MPa]	ε_{Pl} [%]	Estado de la verificación
COL-bfl 1	344.7	25.1	LE1	29.8	0.0	Aceptar
COL-tfl 1	344.7	25.1	LE1	21.6	0.0	Aceptar
COL-w 1	344.7	15.5	LE1	19.5	0.0	Aceptar
BP1	344.7	25.4	LE1	40.4	0.0	Aceptar
WID1a	344.7	12.0	LE1	22.5	0.0	Aceptar
WID1b	344.7	12.0	LE1	45.9	0.0	Aceptar
WID1c	344.7	12.0	LE1	12.7	0.0	Aceptar
WID1d	344.7	12.0	LE1	33.4	0.0	Aceptar
WID1e	344.7	12.0	LE1	16.0	0.0	Aceptar
WID1f	344.7	12.0	LE1	32.4	0.0	Aceptar

Datos de diseño

Material	fy [MPa]	ε_{lim} [%]
A572 Gr.50	344.7	5.0

Explicación del símbolo

ε_{Pl}	Deformación plástica
σ_{Ed}	Ec. tensión
fy	Límite elástico
ε_{lim}	Límite de la deformación plástica

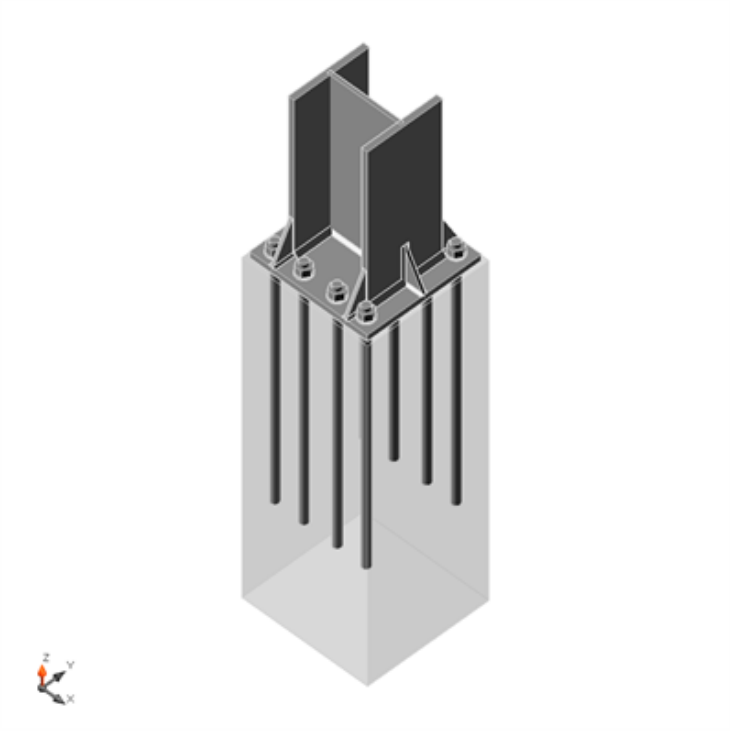

Verificación general, LE1

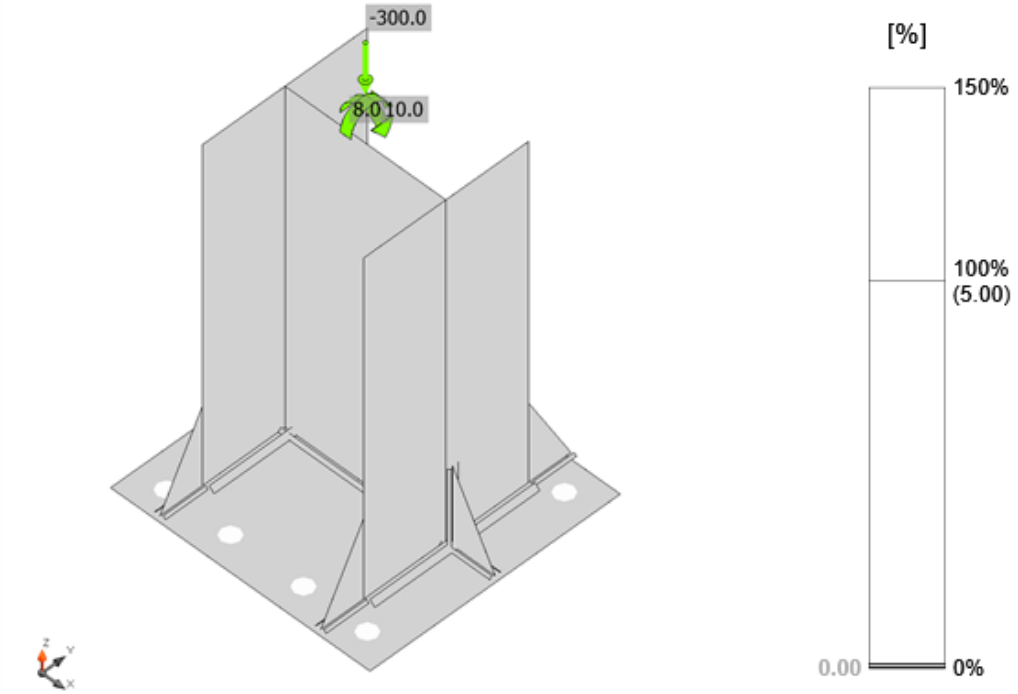

Verificación de deformación, LE1

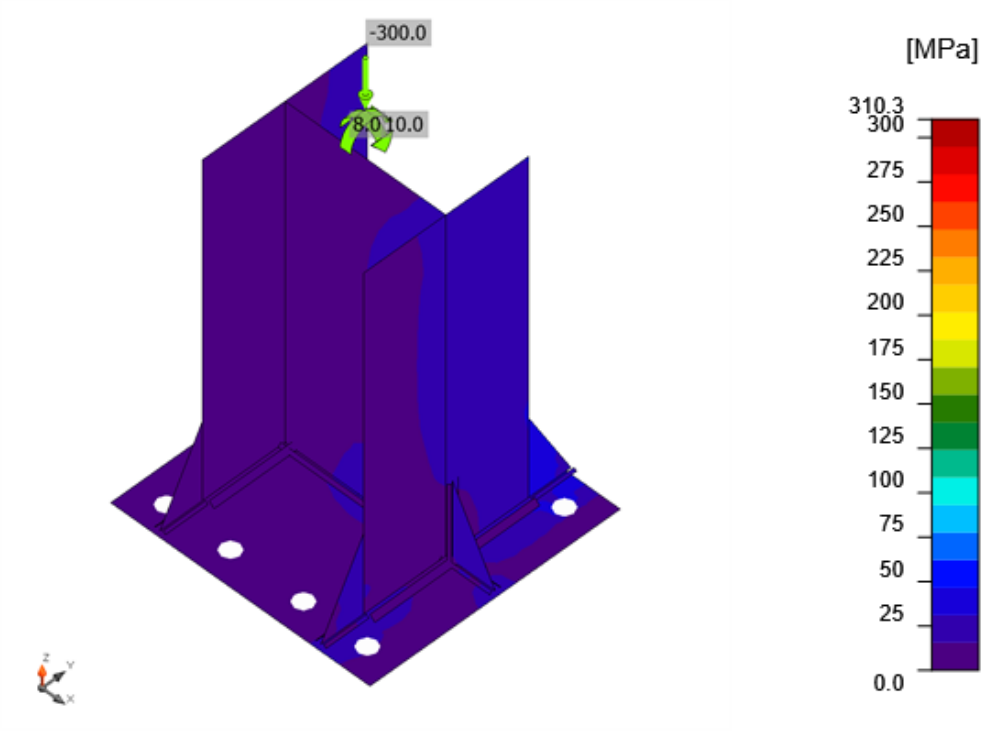

Tensión equivalente, LE1

Anclajes

Forma	Ítem	Cargas	N_f [kN]	ϕV_{cp} [kN]	Ut_t [%]	Ut_s [%]	Ut_{ts} [%]	Estado
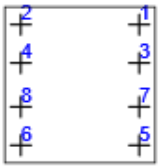	A1	LE1	0.0	142.2	0.0	0.0	0.0	Aceptar
	A2	LE1	0.0	142.2	0.0	0.0	0.0	Aceptar
	A3	LE1	0.0	142.2	0.0	0.0	0.0	Aceptar
	A4	LE1	0.0	142.2	0.0	0.0	0.0	Aceptar
	A5	LE1	0.0	142.2	0.0	0.0	0.0	Aceptar
	A6	LE1	0.0	142.2	0.0	0.0	0.0	Aceptar
	A7	LE1	0.0	142.2	0.0	0.0	0.0	Aceptar
	A8	LE1	0.0	142.2	0.0	0.0	0.0	Aceptar

Datos de diseño

Calidad	ϕN_{sa} [kN]
1 1/4 A325 - 1	317.3

Explicación del símbolo

N_f	Fuerza de tracción
ϕV_{cp}	Resistencia al desprendimiento del hormigón por cabeceo del anclaje a cortante de acuerdo con – ACI 318-14 – 17.5.3
Ut_t	Utilización a tracción
Ut_s	Utilización a cortante
Ut_{ts}	Utilización a tensión y cortante
ϕN_{sa}	Resistencia del anclaje en tracción - ACI 318-14 – 17.4.1

Soldaduras

Ítem	Borde	Xu	T_h [mm]	L_s [mm]	L [mm]	L_c [mm]	F_n [kN]	ϕR_n [kN]	Ut [%]	Estado
BP1	COL-bfl 1	E70xx	◢12.6◣	◢17.7◣	310	31	7.8	120.1	6.5	Aceptar
		E70xx	◢12.6◣	◢17.7◣	309	31	7.4	126.3	5.9	Aceptar
BP1	COL-tfl 1	E70xx	◢12.6◣	◢17.7◣	309	31	4.9	125.5	3.9	Aceptar
		E70xx	◢12.6◣	◢17.7◣	310	31	6.1	118.5	5.2	Aceptar
BP1	COL-w 1	E70xx	◢7.8◣	◢11.0◣	301	30	4.8	74.3	6.5	Aceptar
		E70xx	◢7.8◣	◢11.0◣	301	30	4.6	75.6	6.0	Aceptar
BP1	WID1a	E70xx	◢6.0◣	◢8.5◣	80	20	3.3	37.5	8.7	Aceptar
		E70xx	◢6.0◣	◢8.5◣	80	20	3.2	38.6	8.4	Aceptar
COL-bfl 1	WID1a	E70xx	-	-	150	-	-	-	-	Aceptar
BP1	WID1b	E70xx	◢6.0◣	◢8.5◣	80	20	5.5	38.8	14.1	Aceptar
		E70xx	◢6.0◣	◢8.5◣	80	20	5.6	37.8	14.8	Aceptar
COL-bfl 1	WID1b	E70xx	-	-	150	-	-	-	-	Aceptar
BP1	WID1c	E70xx	◢6.0◣	◢8.5◣	80	20	1.4	39.0	3.6	Aceptar
		E70xx	◢6.0◣	◢8.5◣	80	20	1.7	36.6	4.7	Aceptar
COL-tfl 1	WID1c	E70xx	-	-	150	-	-	-	-	Aceptar
BP1	WID1d	E70xx	◢6.0◣	◢8.5◣	80	20	4.0	37.5	10.8	Aceptar
		E70xx	◢6.0◣	◢8.5◣	80	20	3.7	39.0	9.5	Aceptar
COL-tfl 1	WID1d	E70xx	-	-	150	-	-	-	-	Aceptar
BP1	WID1e	E70xx	◢6.0◣	◢8.5◣	80	20	1.5	35.4	4.2	Aceptar
		E70xx	◢6.0◣	◢8.5◣	80	20	1.4	36.3	3.9	Aceptar
COL-tfl 1	WID1e	E70xx	◢6.0◣	◢8.5◣	150	19	0.9	32.4	2.7	Aceptar
		E70xx	◢6.0◣	◢8.5◣	150	19	0.9	31.5	2.7	Aceptar
BP1	WID1f	E70xx	◢6.0◣	◢8.5◣	80	20	3.0	35.9	8.3	Aceptar
		E70xx	◢6.0◣	◢8.5◣	80	20	3.1	35.5	8.7	Aceptar
COL-bfl 1	WID1f	E70xx	◢6.0◣	◢8.5◣	150	19	1.5	30.6	4.8	Aceptar
		E70xx	◢6.0◣	◢8.5◣	150	19	1.5	31.3	4.7	Aceptar

Explicación del símbolo

T_h	Espesor de garganta de soldadura
L_s	Tamaño de la soldadura
L	Longitud de la soldadura
L_c	Longitud del elemento crítico de la soldadura
F_n	Fuerza en el elemento crítico de la soldadura
ϕR_n	Resistencia de la soldadura, AISC 360-10 J2.4
Ut	Utilización

Bloque de hormigón

Ítem	Cargas	A_1 [mm2]	A_2 [mm2]	σ [MPa]	Ut [%]	Estado
CB 1	LE1	219973	256851	1.4	8.3	Aceptar

Explicación del símbolo

A_1	Área cargada
A_2	Área de soporte
σ	Tensión media en el hormigón
Ut	Utilización

Cortante en el plano de contacto

Ítem	Cargas	V [kN]	ϕV_r [kN]	μ [-]	Ut [%]	Estado
BP1	LE1	0.0	78.0	0.40	0.0	Aceptar

Explicación del símbolo

V	Esfuerzo cortante
ϕV_r	Resistencia a cortante
μ	Coeficiente de fricción entre la placa de anclaje y el bloque de hormigón
Ut	Utilización

Pandeo

El análisis de pandeo no se ha calculado.

Configuración de la norma

Ítem	Valor	Unidad	Referencia
Coeficiente de fricción - hormigón	0.40	-	ACI 349 – B.6.1.4
Coeficiente de fricción en la resistencia a deslizamiento	0.30	-	AISC 360-16 – J3.8
Deformación plástica límite	0.05	-	
Evaluación de la tensión de la soldadura	Redistribución plástica		
Detallado	No		
Distancia entre tornillos [d]	2.66	-	AISC 360-16 – J3.3
Distancia entre tornillos y el borde [d]	1.25	-	AISC 360-16 – J.3.4
Resistencia al arrancamiento del cono de hormigón	Sí		
Resistencia del metal base en la cara de fusión de la soldadura	No		AISC 360-16 – J2-2
Hormigón fisurado	Sí		ACI 318-14 – Chapter 17
Comprobación de la deformación local	No		
Deformación límite local	0.03	-	CIDECT DG 1, 3 - 1.1
No linealidad geométrica (GMNA)	Sí		Grandes deformaciones para secciones huecas
Braced system	No		

Datos del proyecto

Nombre del proyecto	CONEXION COLUMA A VIGA IPE
Número del Proyecto	
Autor	ALVARO CABALLERO
Descripción	UNION COL W12X106 A IPE 360
Fecha	
Normativa de cálculo	AISC 360-16

Material

Acero	A572 Gr.50
Hormigón	4000 psi

Ítem del proyecto CON2

Diseño

Nombre	CON2
Descripción	
Análisis	Tensión, deformación/ Carga simplificada
Normativa de cálculo	AISC - LRFD

Elementos estructurales

Nombre	Sección transversal	β – Dirección [°]	γ - Inclinación [°]	α - Rotación [°]	Desplazamiento ex [mm]	Desplazamiento ey [mm]	Desplazamiento ez [mm]	Fuerzas en	X [mm]
C	1 - W12x106(W(Imp)12X106)	0.0	90.0	0.0	0	0	0	Nudo	0
B	3 - IPE360	0.0	0.0	0.0	0	0	0	Posición	90

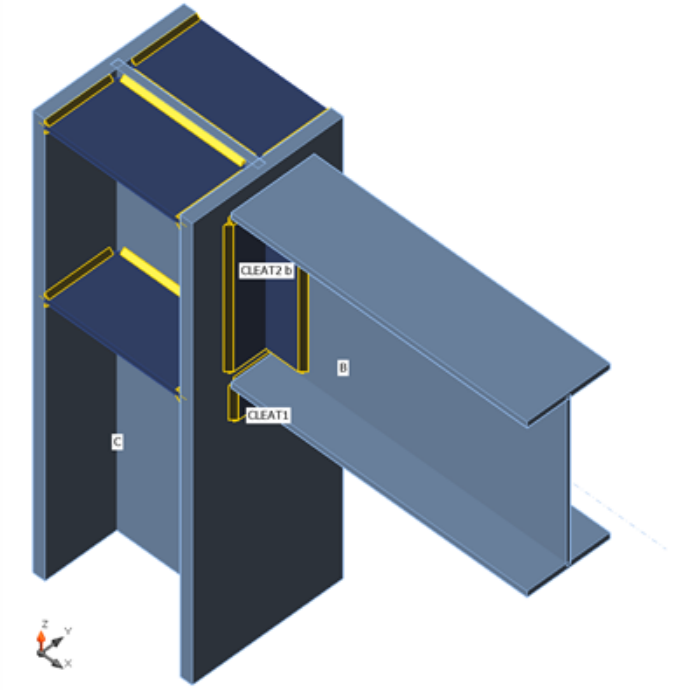

Secciones

Nombre	Material
1 - W12x106(W(Imp)12X106)	A572 Gr.50
3 - IPE360	A572 Gr.50
4 - L(Imp)3X3X3/8	A572 Gr.50

Cargas (No se requiere el equilibro)

Nombre	Elemento	N [kN]	Vy [kN]	Vz [kN]	Mx [kNm]	My [kNm]	Mz [kNm]
LE1	B	0.0	0.0	-120.0	0.0	0.0	0.0

Verificación

Resumen

Nombre	Valor	Estado de la verificación
Análisis	100.0%	Aceptar
Placas	0.0 < 5%	Aceptar
Soldaduras	75.6 < 100%	Aceptar
Pandeo	No calculado	

Placas

Nombre	F_y [MPa]	Espesor [mm]	Cargas	σ_{Ed} [MPa]	ε_{Pl} [%]	Estado de la verificación
C-bfl 1	344.7	25.1	LE1	3.6	0.0	Aceptar
C-tfl 1	344.7	25.1	LE1	13.5	0.0	Aceptar
C-w 1	344.7	15.5	LE1	18.8	0.0	Aceptar
B-bfl 1	344.7	12.7	LE1	104.5	0.0	Aceptar
B-tfl 1	344.7	12.7	LE1	104.5	0.0	Aceptar
B-w 1	344.7	8.0	LE1	101.7	0.0	Aceptar
CLEAT1-bfl 1	344.7	9.5	LE1	15.8	0.0	Aceptar
CLEAT1-w 1	344.7	9.5	LE1	10.6	0.0	Aceptar
CLEAT2 a-bfl 1	344.7	9.5	LE1	282.6	0.0	Aceptar
CLEAT2 a-w 1	344.7	9.5	LE1	240.5	0.0	Aceptar
CLEAT2 b-bfl 1	344.7	9.5	LE1	282.6	0.0	Aceptar
CLEAT2 b-w 1	344.7	9.5	LE1	240.5	0.0	Aceptar
RIGIDIZAR1a	344.7	12.0	LE1	5.7	0.0	Aceptar
RIGIDIZAR1b	344.7	12.0	LE1	5.7	0.0	Aceptar
RIGIDIZAR2a	344.7	12.0	LE1	6.5	0.0	Aceptar
RIGIDIZAR2b	344.7	12.0	LE1	6.5	0.0	Aceptar

Datos de diseño

Material	fy [MPa]	ε_{lim} [%]
A572 Gr.50	344.7	5.0

Explicación del símbolo

ε_{Pl}	Deformación plástica
σ_{Ed}	Ec. tensión
fy	Límite elástico
ε_{lim}	Límite de la deformación plástica

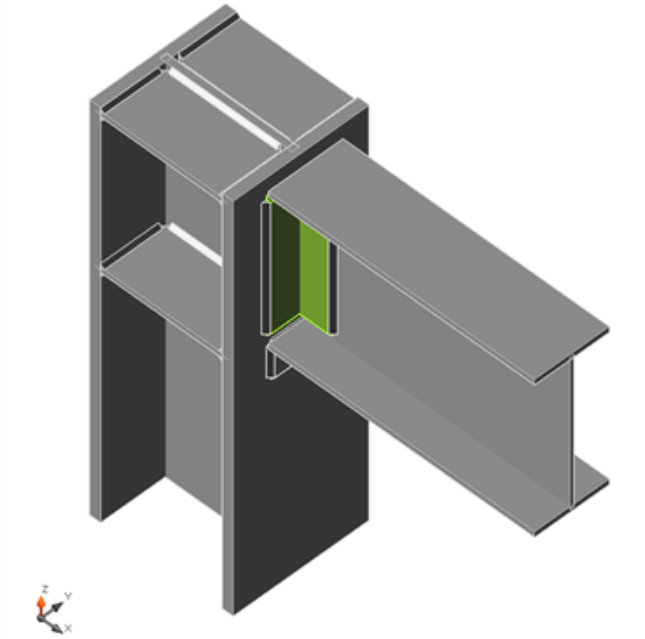

Verificación general, LE1

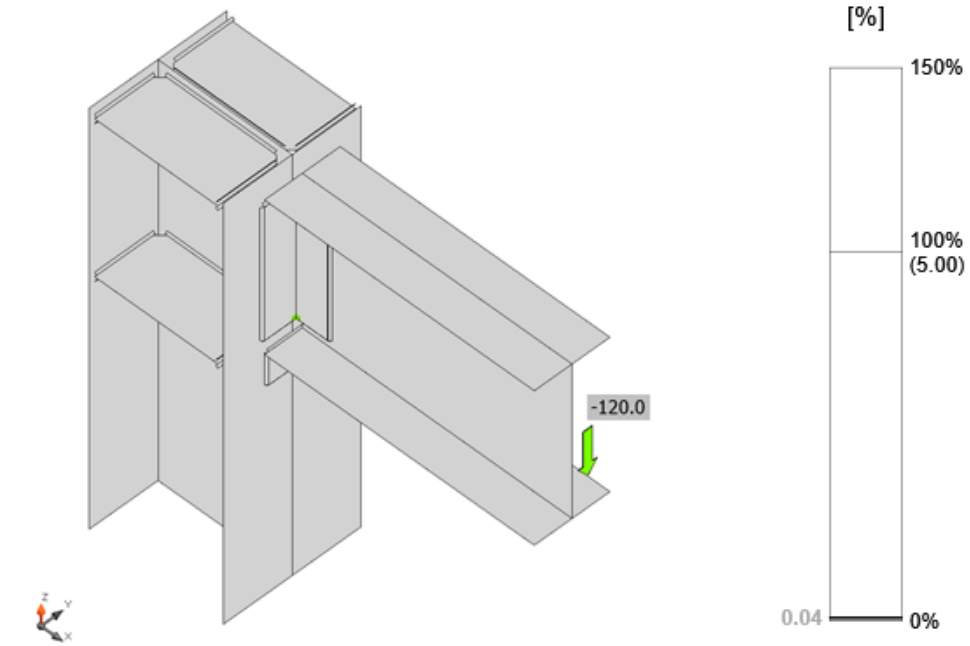

Verificación de deformación, LE1

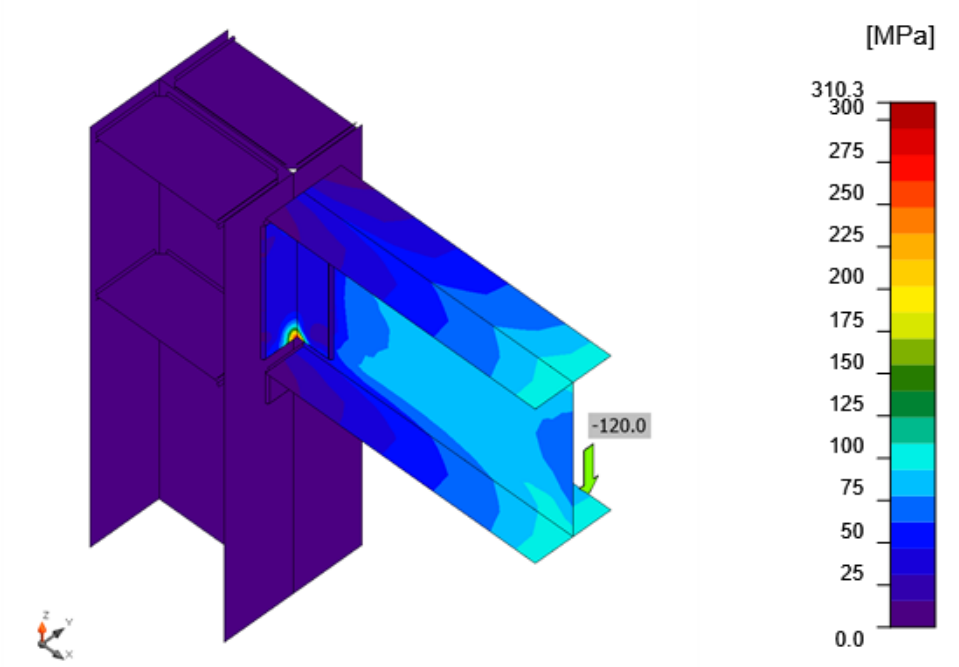

Tensión equivalente, LE1

Soldaduras

Ítem	Borde	Xu	T_h [mm]	L_s [mm]	L [mm]	L_c [mm]	F_n [kN]	ϕR_n [kN]	Ut [%]	Estado
C-tfl 1	CLEAT1-bfl 1	E70xx	◢7.1	◢10.0	71	10	0.6	23.2	2.6	Aceptar
C-tfl 1	CLEAT1-bfl 1	E70xx	◢7.1	◢10.0	139	10	1.0	20.6	4.7	Aceptar
C-tfl 1	CLEAT1-bfl 1	E70xx	◢7.1	◢10.0	71	10	0.6	23.2	2.6	Aceptar
C-tfl 1	CLEAT1-bfl 1	E70xx	◢7.1	◢10.0	139	10	0.5	22.8	2.4	Aceptar
B-w 1	CLEAT2 a-w 1	E70xx	◢7.1	◢10.0	66	9	10.1	15.5	65.2	Aceptar
B-w 1	CLEAT2 a-w 1	E70xx	◢7.1	◢10.0	66	9	10.6	15.7	67.6	Aceptar
B-w 1	CLEAT2 a-w 1	E70xx	◢7.1	◢10.0	299	10	2.6	21.0	12.1	Aceptar
C-tfl 1	CLEAT2 a-bfl 1	E70xx	◢7.1	◢10.0	71	10	17.5	23.1	75.5	Aceptar
C-tfl 1	CLEAT2 a-bfl 1	E70xx	◢7.1	◢10.0	71	10	17.5	23.1	75.6	Aceptar
C-tfl 1	CLEAT2 a-bfl 1	E70xx	◢7.1	◢10.0	297	10	1.6	15.3	10.3	Aceptar
B-w 1	CLEAT2 b-w 1	E70xx	◢7.1	◢10.0	66	9	10.6	15.7	67.6	Aceptar
B-w 1	CLEAT2 b-w 1	E70xx	◢7.1	◢10.0	66	9	10.1	15.5	65.1	Aceptar
B-w 1	CLEAT2 b-w 1	E70xx	◢7.1	◢10.0	299	10	2.6	21.0	12.2	Aceptar
C-tfl 1	CLEAT2 b-bfl 1	E70xx	◢7.1	◢10.0	71	10	17.5	23.1	75.6	Aceptar
C-tfl 1	CLEAT2 b-bfl 1	E70xx	◢7.1	◢10.0	71	10	17.5	23.1	75.5	Aceptar
C-tfl 1	CLEAT2 b-bfl 1	E70xx	◢7.1	◢10.0	297	10	1.6	15.3	10.3	Aceptar
C-bfl 1	RIGIDIZAR1a	E70xx	◢6.0◣	◢8.5◣	132	33	0.2	59.9	0.4	Aceptar
		E70xx	◢6.0◣	◢8.5◣	132	33	0.2	44.6	0.5	Aceptar
C-w 1	RIGIDIZAR1a	E70xx	◢6.0◣	◢8.5◣	246	35	0.8	50.2	1.6	Aceptar
		E70xx	◢6.0◣	◢8.5◣	246	35	0.6	52.4	1.1	Aceptar
C-tfl 1	RIGIDIZAR1a	E70xx	◢6.0◣	◢8.5◣	132	33	2.0	58.1	3.4	Aceptar
		E70xx	◢6.0◣	◢8.5◣	132	33	1.4	64.3	2.2	Aceptar
C-bfl 1	RIGIDIZAR1b	E70xx	◢6.0◣	◢8.5◣	132	33	0.2	44.6	0.5	Aceptar
		E70xx	◢6.0◣	◢8.5◣	132	33	0.2	59.9	0.4	Aceptar
C-w 1	RIGIDIZAR1b	E70xx	◢6.0◣	◢8.5◣	246	35	0.6	52.4	1.1	Aceptar
		E70xx	◢6.0◣	◢8.5◣	246	35	0.8	50.2	1.6	Aceptar
C-tfl 1	RIGIDIZAR1b	E70xx	◢6.0◣	◢8.5◣	132	33	1.4	64.3	2.2	Aceptar
		E70xx	◢6.0◣	◢8.5◣	132	33	2.0	58.1	3.4	Aceptar
C-bfl 1	RIGIDIZAR2a	E70xx	◢6.0◣	◢8.5◣	132	33	0.4	52.0	0.7	Aceptar
		E70xx	◢6.0◣	◢8.5◣	132	33	0.5	58.0	0.8	Aceptar
C-w 1	RIGIDIZAR2a	E70xx	◢6.0◣	◢8.5◣	246	35	0.6	48.8	1.3	Aceptar
		E70xx	◢6.0◣	◢8.5◣	246	35	0.8	51.4	1.5	Aceptar
C-tfl 1	RIGIDIZAR2a	E70xx	◢6.0◣	◢8.5◣	132	33	1.9	63.8	3.1	Aceptar
		E70xx	◢6.0◣	◢8.5◣	132	33	2.2	61.3	3.5	Aceptar
C-bfl 1	RIGIDIZAR2b	E70xx	◢6.0◣	◢8.5◣	132	33	0.5	58.0	0.8	Aceptar
		E70xx	◢6.0◣	◢8.5◣	132	33	0.4	52.0	0.7	Aceptar
C-w 1	RIGIDIZAR2b	E70xx	◢6.0◣	◢8.5◣	246	35	0.8	51.4	1.5	Aceptar
		E70xx	◢6.0◣	◢8.5◣	246	35	0.6	48.8	1.3	Aceptar
C-tfl 1	RIGIDIZAR2b	E70xx	◢6.0◣	◢8.5◣	132	33	2.2	61.3	3.5	Aceptar
		E70xx	◢6.0◣	◢8.5◣	132	33	1.9	63.8	3.1	Aceptar

Explicación del símbolo

T_h	Espesor de garganta de soldadura
L_s	Tamaño de la soldadura
L	Longitud de la soldadura
L_c	Longitud del elemento crítico de la soldadura
F_n	Fuerza en el elemento crítico de la soldadura
ϕR_n	Resistencia de la soldadura, AISC 360-10 J2.4
Ut	Utilización

Pandeo

El análisis de pandeo no se ha calculado.

Configuración de la norma

Ítem	Valor	Unidad	Referencia
Coeficiente de fricción - hormigón	0.40	-	ACI 349 – B.6.1.4
Coeficiente de fricción en la resistencia a deslizamiento	0.30	-	AISC 360-16 – J3.8
Deformación plástica límite	0.05	-	
Evaluación de la tensión de la soldadura	Redistribución plástica		
Detallado	No		
Distancia entre tornillos [d]	2.66	-	AISC 360-16 – J3.3
Distancia entre tornillos y el borde [d]	1.25	-	AISC 360-16 – J.3.4
Resistencia al arrancamiento del cono de hormigón	Sí		
Resistencia del metal base en la cara de fusión de la soldadura	No		AISC 360-16 – J2-2
Hormigón fisurado	Sí		ACI 318-14 – Chapter 17
Comprobación de la deformación local	No		
Deformación límite local	0.03	-	CIDECT DG 1, 3 - 1.1
No linealidad geométrica (GMNA)	Sí		Grandes deformaciones para secciones huecas
Braced system	No		

Datos del proyecto

Nombre del proyecto	CONEXION VIGA IPE A VIGUETA IPE
Número del Proyecto	
Autor	ALVARO CABALLERO
Descripción	UNION IPE 360 A IPE 240
Fecha	
Normativa de cálculo	AISC 360-16

Material

Acero	A572 Gr.50
Hormigón	4000 psi

Ítem del proyecto CON3

Diseño

Nombre	CON3
Descripción	
Análisis	Tensión, deformación/ Carga simplificada
Normativa de cálculo	AISC - LRFD

Elementos estructurales

Nombre	Sección transversal	β – Dirección [°]	γ - Inclinación [°]	α - Rotación [°]	Desplazamiento ex [mm]	Desplazamiento ey [mm]	Desplazamiento ez [mm]	Fuerzas en	X [mm]
B	3 - IPE360	0.0	0.0	0.0	0	0	0	Nudo	0
B1	6 - CON1(IPE240)	-90.0	0.0	0.0	0	0	60	Tornillos	38

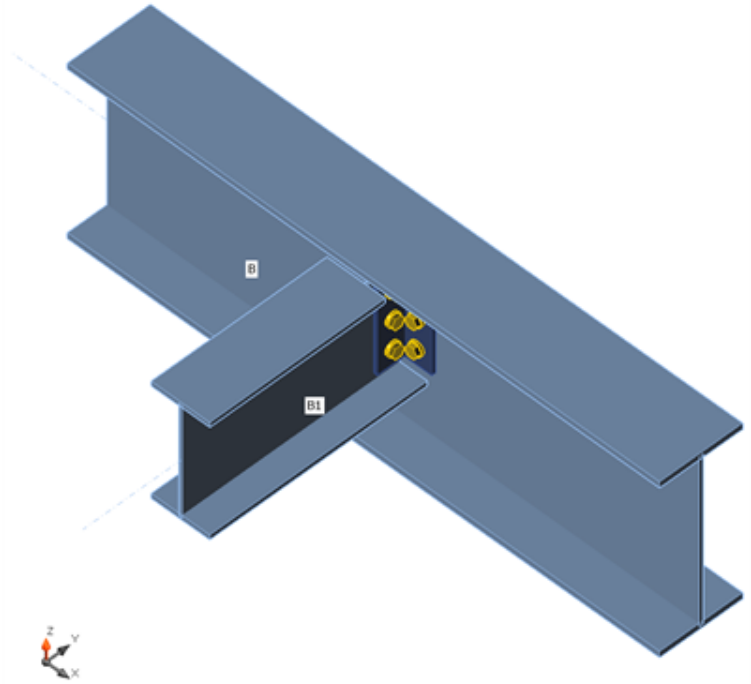

Secciones

Nombre	Material
3 - IPE360	A572 Gr.50
6 - CON1(IPE240)	A572 Gr.50
7 - L(Imp)2-1/2X2-1/2X5/16	A572 Gr.50

Tornillos

Nombre	Conjunto de tornillo	Diámetro [mm]	fu [MPa]	Área bruta [mm^2]
1/2 A325	1/2 A325	13	825.0	127

Cargas (No se requiere el equilibro)

Nombre	Elemento	N [kN]	Vy [kN]	Vz [kN]	Mx [kNm]	My [kNm]	Mz [kNm]
LE1	B1	0.0	0.0	-100.0	0.0	0.0	0.0

Verificación

Resumen

Nombre	Valor	Estado de la verificación
Análisis	100.0%	Aceptar
Placas	0.2 < 5%	Aceptar
Tornillos	53.1 < 100%	Aceptar
Pandeo	No calculado	

Placas

Nombre	F_y [MPa]	Espesor [mm]	Cargas	σ_{Ed} [MPa]	ε_{Pl} [%]	Estado de la verificación
B-bfl 1	344.7	12.7	LE1	56.5	0.0	Aceptar
B-tfl 1	344.7	12.7	LE1	47.6	0.0	Aceptar
B-w 1	344.7	8.0	LE1	310.4	0.1	Aceptar
B1-bfl 1	344.7	9.8	LE1	157.7	0.0	Aceptar
B1-tfl 1	344.7	9.8	LE1	157.6	0.0	Aceptar
B1-w 1	344.7	6.2	LE1	310.6	0.2	Aceptar
CLEAT1 a-bfl 1	344.7	7.9	LE1	267.4	0.0	Aceptar
CLEAT1 a-w 1	344.7	7.9	LE1	283.6	0.0	Aceptar
CLEAT1 b-bfl 1	344.7	7.9	LE1	242.6	0.0	Aceptar
CLEAT1 b-w 1	344.7	7.9	LE1	269.3	0.0	Aceptar

Datos de diseño

Material	fy [MPa]	ε_{lim} [%]
A572 Gr.50	344.7	5.0

Explicación del símbolo

ε_{Pl}	Deformación plástica
σ_{Ed}	Ec. tensión
fy	Límite elástico
ε_{lim}	Límite de la deformación plástica

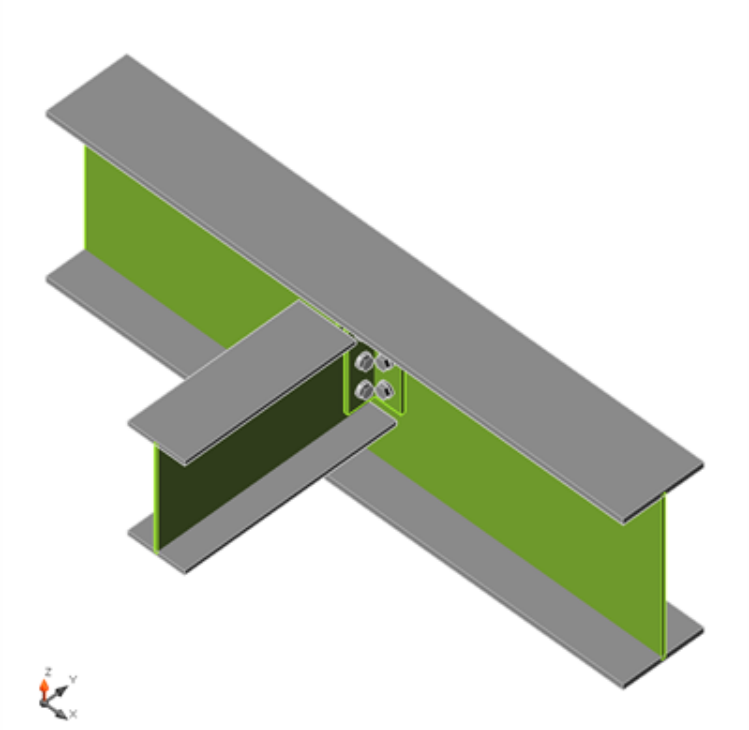

Verificación general, LE1

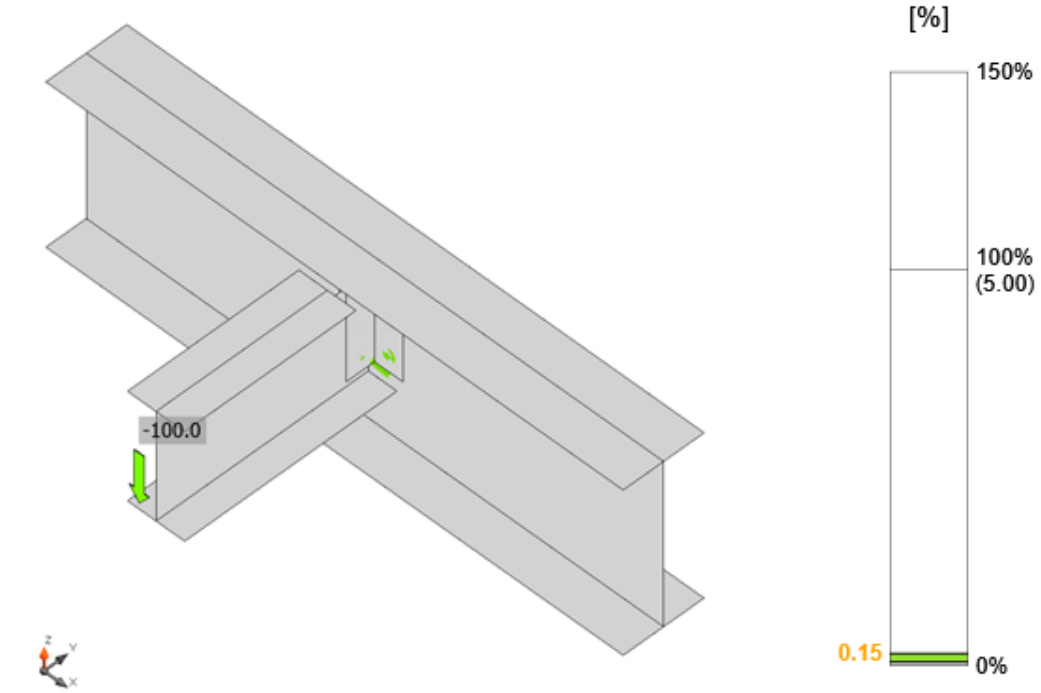

Verificación de deformación, LE1

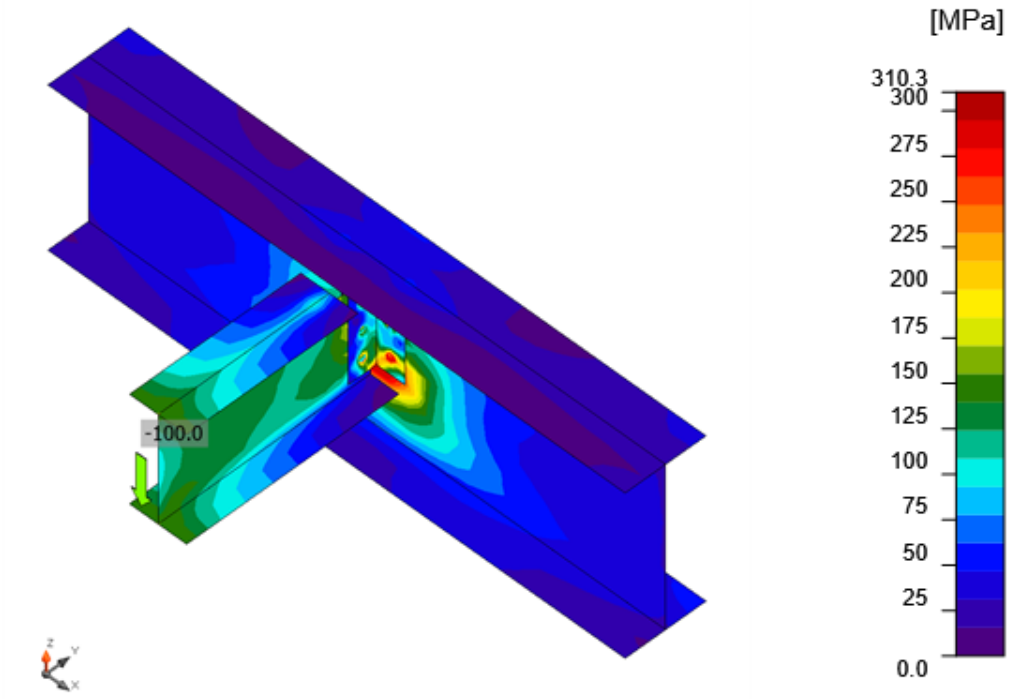

Tensión equivalente, LE1

Tornillos

Forma	Ítem	Calidad	Cargas	F_t [kN]	V [kN]	$\phi R_{n,portante}$ [kN]	Ut_t [%]	Ut_s [%]	Ut_{ts} [%]	Estado
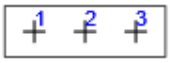	B1	1/2 A325 - 1	LE1	10.6	16.9	63.5	18.1	53.1	-	Aceptar
	B2	1/2 A325 - 1	LE1	3.7	16.6	63.5	6.3	52.4	-	Aceptar
	B3	1/2 A325 - 1	LE1	5.8	16.5	62.9	9.8	52.4	-	Aceptar
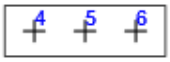	B4	1/2 A325 - 1	LE1	14.2	17.3	80.9	24.1	48.9	-	Aceptar
	B5	1/2 A325 - 1	LE1	1.7	16.2	80.9	2.8	45.8	-	Aceptar
	B6	1/2 A325 - 1	LE1	18.9	17.2	80.9	32.0	48.5	39.3	Aceptar
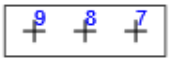	B7	1/2 A325 - 1	LE1	11.2	17.2	80.9	19.0	48.8	-	Aceptar
	B8	1/2 A325 - 1	LE1	1.5	16.2	80.9	2.5	45.8	-	Aceptar
	B9	1/2 A325 - 1	LE1	19.2	17.2	80.9	32.6	48.6	40.0	Aceptar

Datos de diseño

Calidad	$\phi R_{n,tracción}$ [kN]	$\phi R_{n,cortante}$ [kN]
1/2 A325 - 1	58.9	35.3

Explicación del símbolo

F_t	Fuerza de tracción
V	Resultante de las fuerzas cortantes Vy, Vz en el tornillo.
$\phi R_{n,portante}$	Resistencia a aplastamiento de la chapa provocado por el tornillo
Ut_t	Utilización a tracción
Ut_s	Utilización a cortante
Ut_{ts}	Utilización a tensión y cortante
$\phi R_{n,tracción}$	Resistencia de los tornillos a tracción, según AISC 360-10 tabla J3.2
$\phi R_{n,cortante}$	Resistencia de los tornillos a cortante, según AISC 360-16 tabla J3.2

Pandeo

El análisis de pandeo no se ha calculado.

Configuración de la norma

Ítem	Valor	Unidad	Referencia
Coeficiente de fricción - hormigón	0.40	-	ACI 349 – B.6.1.4
Coeficiente de fricción en la resistencia a deslizamiento	0.30	-	AISC 360-16 – J3.8
Deformación plástica límite	0.05	-	
Evaluación de la tensión de la soldadura	Redistribución plástica		
Detallado	No		
Distancia entre tornillos [d]	2.66	-	AISC 360-16 – J3.3
Distancia entre tornillos y el borde [d]	1.25	-	AISC 360-16 – J.3.4
Resistencia al arrancamiento del cono de hormigón	Sí		
Resistencia del metal base en la cara de fusión de la soldadura	No		AISC 360-16 – J2-2
Hormigón fisurado	Sí		ACI 318-14 – Chapter 17
Comprobación de la deformación local	No		
Deformación límite local	0.03	-	CIDECT DG 1, 3 - 1.1
No linealidad geométrica (GMNA)	Sí		Grandes deformaciones para secciones huecas
Braced system	No		

Memorias de Cálculo

PROGRAMA DE DISENO Y CALCULO ESTRUCTURAL
ARQUIMET 2.0

Proyecto: REFORZAMIENTO CASA DEL CORREGIDOR

Ingeniero: ALVARO CABALLERO GUERRERO

Elementos calculados con el programa de diseño Arquimet 2.0 de ACESCO

REPORTE DE METALDECK

MD 2 Calibre: 22. (0.75 mm) h = 120 mm.

SECCION LONGITUDINAL

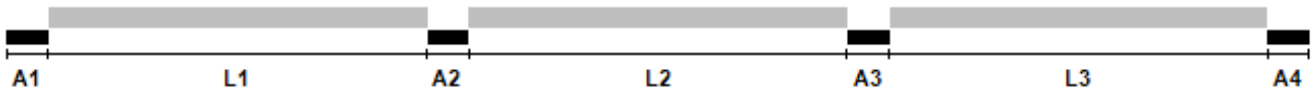

CONFIGURACION							
Luz	Longitud (m)	C. Muerta (Kgf/m²)	C. Viva (Kgf/m²)	P. Propio (Kgf/m²)	C. Total (Kgf/m²)	C. Puntual Muerta P(Kgf/m), x (m), b (m)	C. Puntual Viva P(Kgf/m), x (m), b (m)
L1	0.90	200.00	500.00	229.46	929.46	----	----
L2	0.90	200.00	500.00	229.46	929.46	----	----
L3	0.90	200.00	500.00	229.46	929.46	----	----

APOYOS	
A1	0.10 m
A2	0.10 m
A3	0.10 m
A4	0.10 m

Carga distribuida máxima en la construcción	100.00 Kgf/m²
Carga lineal máxima en la construcción	224.26 Kgf/m
Resistencia del concreto	2.10E06 Kgf/m²

MD 2 Calibre: 22. (0.75 mm) h = 120 mm.

h = 120 mm

Memorias de Cálculo

PROGRAMA DE DISENO Y CALCULO ESTRUCTURAL
ARQUIMET 2.0

Proyecto: REFORZAMIENTO CASA DEL CORREGIDOR

Ingeniero: ALVARO CABALLERO GUERRERO

Elementos calculados con el programa de diseño Arquimet 2.0 de ACESCO

REPORTE DE DISEÑO POR FACTORES DE CARGA

PARAMETRO DE DISEÑO CONSTRUCCION	RESISTENTE	CALCULADO	LUZ No.
Deflexión Cargas Sobre-Impuestas (m)	0.0050	2.2064E-04	2
Momento Positivo (Kgf-m/m)	317.9827	85.3073	1
Momento Negativo (Kgf-m/m)	261.6152	8.0168E-06	2
Cortante (Kgf/m)	2107.1326	148.2551	1

PARAMETRO DE DISEÑO VIDA UTIL	MAXIMO/ULTIMO	CALCULADO	LUZ No.
Deflexión instantanea (m)	0.0050	1.3376E-05	3
Deflexión permanente (m)	0.0050	3.7453E-05	3
Fuerza cortante de adherencia (Kgf/m)	1208.9999	378.0000	1
Fuerza cortante sección compuesta (Kgf/m)	3695.4993	710.2874	1
Momento máximo positivo (Kgf-m/m)	2094.3284	85.0865	1
Momento máximo negativo (Kgf-m/m)	5576.8403	117.5500	1
Longitud máxima sin vibraciones (m)	3.6000	0.9000	1

Solicitaciones y areas de refuerzo para momentos negativos
Momentos últimos en Kgf-m por metro de ancho
Losa calculada con 1.40 Carga Muerta + 1.70 Carga Viva
Areas de acero en m² por metro de ancho

PARÁMETROS BÁSICOS DE DISEÑO
Fy acero de refuerzo (KSI) = 60.00
Recubrimiento (cm) = 2.00

Luz 1

Abscisa (m)	0.00	0.08	0.15	0.22	0.30	0.38	0.45	0.52	0.60	0.68	0.75	0.82	0.90
Momentos (-)											-16.33	-62.86	-117.55
Refuerzo (m²)	0.00	0.00	0.00	0.00	0.00	0.00	0.00	0.00	0.00	0.00	1.80E-04	1.80E-04	1.80E-04

Luz 2

Abscisa (m)	0.00	0.08	0.15	0.22	0.30	0.38	0.45	0.52	0.60	0.68	0.75	0.82	0.90
Momentos (-)	-117.55	-72.65	-35.92	-7.35						-7.35	-35.92	-72.65	-117.55
Refuerzo (m²)	1.80E-04	1.80E-04	1.80E-04	1.80E-04	0.00	0.00	0.00	0.00	0.00	1.80E-04	1.80E-04	1.80E-04	1.80E-04

Luz 3

Abscisa (m)	0.00	0.08	0.15	0.22	0.30	0.38	0.45	0.52	0.60	0.68	0.75	0.82	0.90
Momentos (-)	-117.55	-62.86	-16.33										
Refuerzo (m²)	1.80E-04	1.80E-04	1.80E-04	0.00	0.00	0.00	0.00	0.00	0.00	0.00	0.00	0.00	0.00

7. ANALISIS DE RESULTADOS

Teniendo en cuenta los resultados del modelo, se puede analizar que la estructura planteada cumple con las solicitaciones estimadas y los requisitos de la norma para esta categoría de edificación, denotando principalmente las siguientes características.

- El sistema estructural: el sistema planteado en pórticos de acero como exoesqueleto interno, cumple con la función de transmitir las cargas vivas, muertas y sísmicas correctamente.

- Según el análisis estructural realizado, la estructura cumple con los criterios de resistencia para la zona sísmica en la que se encuentra ubicada.

- La sección y resistencia de los elementos planteados son capaces de soportar los esfuerzos que podrían darse en la estructura.

- El sistema de cimentación planteado garantiza la transmisión de esfuerzo y agrega rigidez a la cimentación existente, logrando mayor distribución de los esfuerzos al tratarse de cimientos corridos mejorados.